ACOUSTICAL CEILING TILES

ACT-1	MFR:	ARMSTRONG
	STYLE:	ULTIMA SQUARE LAY-IN
	ITEM NO:	1913HRC
	COLOR:	WHITE
	SIZE:	24" X 48" X 3/4"
	EDGE:	SQUARE
	GRID:	PRELUDE XL 15/16" EXPOSED TEE
	LOCATION:	THROUGHOUT, U.N.O
ACT-2	MFR:	ARMSTRONG
	STYLE:	ULTIMA SQUARE LAY-IN
	ITEM NO:	1910HRC
	COLOR:	WHITE
	SIZE:	24" X 24" X 7/8"
	EDGE:	SQUARE
	GRID:	PRELUDE XL 15/16" EXPOSED TEE
	LOCATION:	EXAM ROOMS IMAGING SPACES HAND THERAPY PREP / RECOVERY ROOMS PROCEDURE ROOMS PRIVATE MODALITY ROOMS NURSE STATIONS PACU BAYS
ACT-3	MFR:	ARMSTRONG
	STYLE:	OPTIMA HEALTHZONE SQUARE LAY-IN
	ITEM NO:	3115PB
	COLOR:	WHITE
	SIZE:	24" X 48" X 1"
	EDGE:	SQUARE
	GRID:	PRELUDE XL 15/16" EXPOSED TEE
	LOCATION:	INSTRUMENT PROCESSING

CEILING SYMBOL LEGEND

- GYPSUM BOARD CEILING
- ACOUSTICAL GYPSUM BOARD CEILING - ACT08
- 24" X 24" ACT TILE
- 24" X 48" ACT TILE
- SCRUBBABLE 24" X 48" ACT TILE
- LINEAR METAL CEILING - BOD HUNTER DOUGLAS - DEEP BOX SERIES - WALNUT
- ACOUSTIC BAFFLE - AB01 - BOD ACOUFELT TRUSS
- STRETCH FABRIC - SF01 - BOD BARRISOL
- SHELLED SPACE
- LED LIGHT
- SUSPENDED LIGHT
- SUSPENDED FLUORESCENT LIGHT
- WALL MOUNTED FIXTURE
- CHANDELIER
- CONTROL JOINTS
- EXIT SIGN - HATCH INDICATES EXIT TEXT & ARROW INDICATES DIRECTION
- SD SMOKE DETECTOR
- FA FIRE ALARM / STROBE
- S SPEAKER
- SP SPRINKLER
- PROJECTOR
- WALL WASHER
- PENDANT TYPE LIGHT FIXTURE
- WALL MOUNTED LIGHT FIXTURE
- DOWNLIGHT
- STRIP LIGHT
- SUPPLY AIR
- RETURN AIR
- EXHAUST AIR
- ACCESS PANEL

GENERAL NOTES - REFLECTED CEILING PLAN

1. ALL CEILINGS SHALL BE 9' - 0" ABOVE FINISHED FLOOR, UNLESS NOTED OTHERWISE. (COORDINATE WITH OWNER-FURNISHED VENDOR DRAWINGS AND EQUIPMENT.
2. IN THE CASE OF MINOR DISCREPANCIES BETWEEN MEP AND ARCHITECTURAL DOCUMENTS IN THE LOCATION OF CEILING MOUNTED COMPONENTS, THE ARCHITECTURAL REFLECTED CEILING PLAN SHALL GOVERN. IN THE CASE OF MAJOR DISCREPANCIES, THE ARCHITECT SHALL BE NOTIFIED AS SOON AS THE DISCREPANCY IS DISCOVERED PRIOR TO PROCEEDING WITH THE WORK.
3. REFERENCE MECHANICAL AND ELECTRICAL DRAWINGS FOR MOUNTING LOCATIONS OF ITEMS WHERE NO CEILING IS REQUIRED OF INDICATED.
4. LIGHTS, DIFFUSERS, EXIT SIGNS, SMOKE DETECTORS, SPEAKERS, STROBES AND MISCELLANEOUS DEVICES SHALL BE CENTERED IN THE CEILING TILE IN WHICH THEY OCCUR, UNLESS NOTED OTHERWISE.
5. ALL CORRIDOR SPRINKLER HEADS SHALL BE ALIGNED IN THE SAME LOCATION PARALLEL TO THE WALL WITHIN EACH SPECIFIC CEILING CONSTRUCTION. ARCHITECTURALLY SIGNIFICANT SPRINKLER HEAD LOCATIONS MAY BE SHOWN ON REFLECTED CEILING PLAN FOR DESIGN INTENT ONLY.
6. ACCESS DOOR LOCATIONS IN GYPSUM BOARD CEILINGS ARE INDICATED ON RCP'S ONLY WHERE ARCHITECTURALLY SIGNIFICANT. REFERENCE SPECIFICATIONS AND MEP DRAWINGS FOR OTHER ACCESS DOOR LOCATIONS
7. EXIT SIGNS ARE SHOWN ON REFLECTED CEILING PLAN ONLY WHERE LOCATION IS ARCHITECTURAL SIGNIFICANT.
8. DIMENSIONS AT CUBICLE CURTAIN TRACKS ARE TO CENTER OF TRACK, TYP.
9. ALL CUBICLE CURTAIN TRACKS MUST CLEAR DOOR SWINGS BY 3" MINIMUM. 10.
10. REFERENCE A0.20 FOR CEILING SYMBOL LEGEND.
11. REFERENCE A3.06 FOR CONTROL JOINT DETAILS.
12. REFERENCE A3.11 - A3.13 FOR METAL FABRICATION DETAILS.
13. REFERENCE A8.04 FOR ELEVATOR CAB REFLECTED CEILING PLANS.

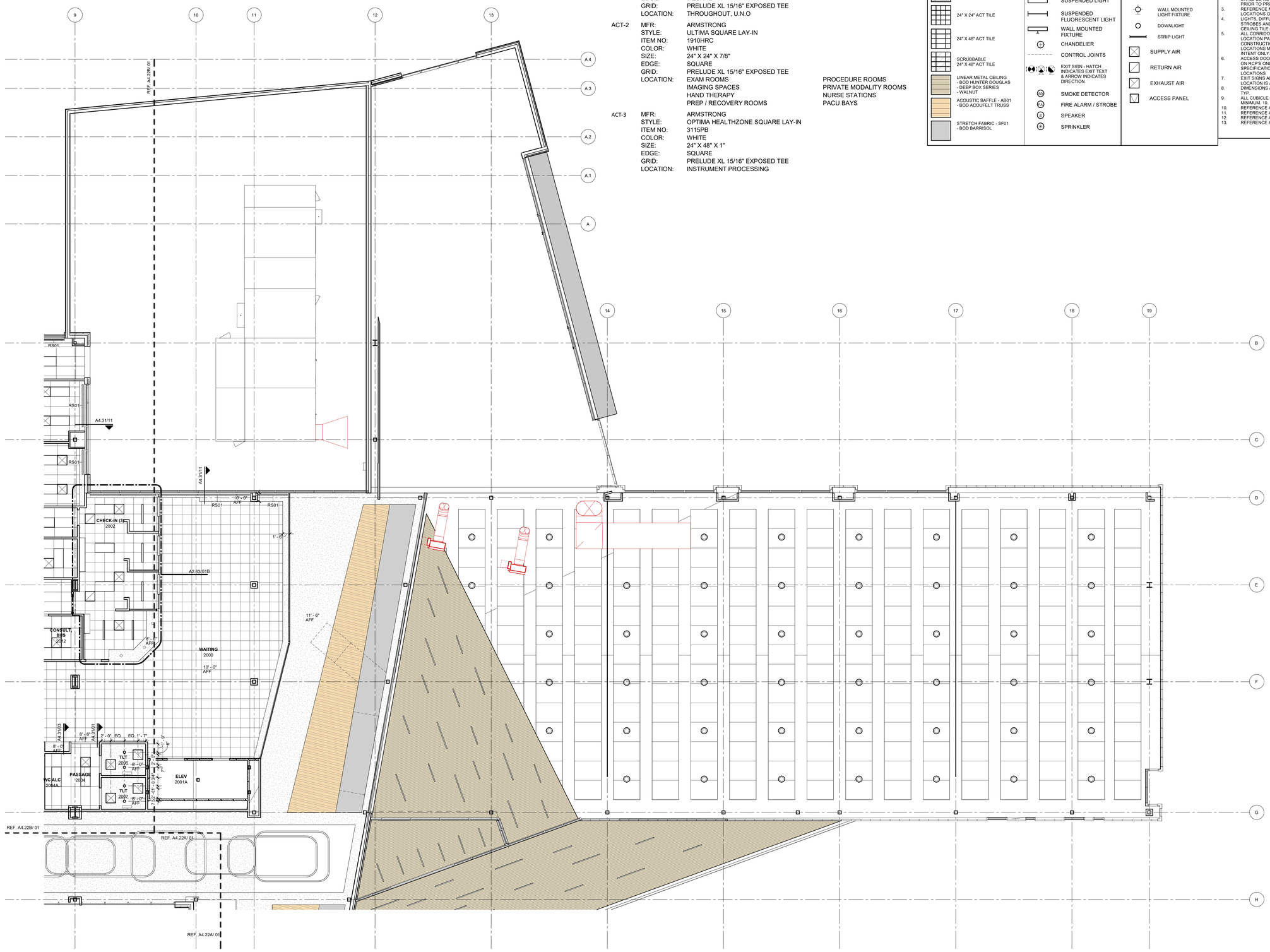

01 OVERALL REFLECTED CEILING PLAN - LEVEL 02
1/8" = 1'-0"

© 2026 HKS, INC.

HKS

ARCHITECT
HKS ARCHITECTS, INC.
90 SOUTH 400 WEST, #110
SALT LAKE CITY, UTAH 84101

CIVIL ENGINEER
GREAT BASIN ENGINEERING, INC
5746 SOUTH 1475 EAST
OGDEN, UTAH 84403

LANDSCAPE ARCHITECT
MGB+A STUDIO
145 WEST 200 SOUTH
SALT LAKE CITY, UTAH 84101

STRUCTURAL ENGINEER
REAVELEY ENGINEERS
250 EAST 200 SOUTH, SUITE 1000
SALT LAKE CITY, UTAH 84111

M/P/FP ENGINEER
RESOLUT GROUP
181 EAST 5600 SOUTH, SUITE 200
MURRAY, UTAH 84107

E/T ENGINEER
LYNK ENGINEERS
324 SOUTH STATE STREET, SUITE 400
SALT LAKE CITY, UTAH 84111

Intermountain Health

UTAH VALLEY SPORTS PERFORMANCE CENTER

PROJECT ADDRESS: WEST 880 NORTH 200 WEST PROVO, UTAH 84604

SEAL & SIGNATURE

KEY PLAN

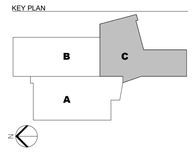

REVISION

NO.	DESCRIPTION	DATE

HKS PROJECT NUMBER
27487.000

DATE
08/26/2026

ISSUE
DESIGN DEVELOPMENT

SHEET TITLE
LEVEL 02 - REFLECTED CEILING PLAN - SECTOR C

SHEET NO.
A4.22C

TITLE BLOCK VERSION: 20251630
MODEL: Autodesk Docs://27487.000_IH - UV Sports Performance Center_2025/A_IH-UV_Sports-Performance-Center_2025.rvt
PRINT DATE: 8/28/2026 1:35:34 PM TEMPLATE VERSION: 23.0.6

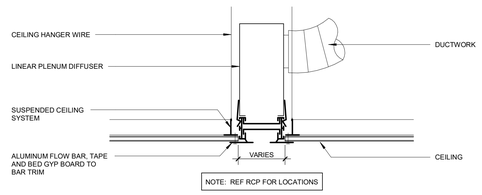

14 ACTIVE LINEAR DIFFUSER DETAIL
1 1/2" = 1'-0"

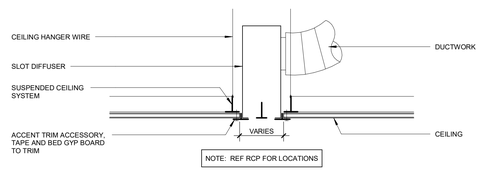

13 ACTIVE SLOT DIFFUSER DETAIL
1 1/2" = 1'-0"

NOTES

1. ICC-ES EVALUATIONREPORT ESR-1222, SECTION 9 - SUSPENSION SYSTEMS AND ACOUSTICAL CEILING SUSPENSION ASSEMBLIES. (THIS REPORT HAS THE SAME REQUIREMENTS FOR GYP BD CEILINGS AND LAY-IN CEILING.
2. ALL LATERAL SUPPORTS MUST BE LOCATED A MIN OF 6" (152mm) FROM HORIZONTAL UNBRACED PIPES AND DUCTWORK.
3. VERTICAL STRUTS FASTENED TO THE MAIN RUNNER SHALL BE EXTENDED TO AND FASTENED TO THE STRUCTURAL MEMBERS SUPPORTING THE ROOF OR FLOOR ABOVE. THE STRUT SHALL BE ADEQUATE TO RESIST THE VERTICAL LOAD INDUCED BY THE BARRIER WIRES.
4. THE VERTICAL STRUTS AT HORIZONTAL RESTRAINT POINTS SHALL BE PLACED 12'-0" (3658mm) OC IN BOTH DIRECTIONS, WITH THE FIRST POINT WITHIN 6'-0" (1830mm) FROM EACH WALL.

15 CEILING GRID ATTACHMENT FOR SEISMIC CONDITION
NTS

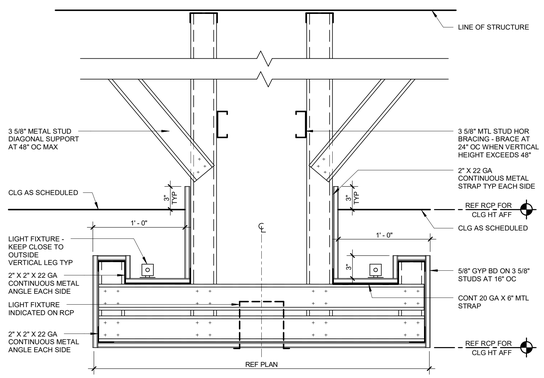

12 SUSPENDED CLOUD DETAIL WITH LIGHT
1 1/2" = 1'-0"

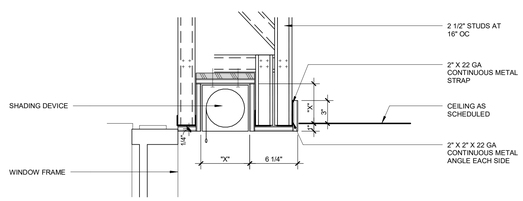

11 RECESSED WINDOW SHADING DEVICE
1 1/2" = 1'-0"

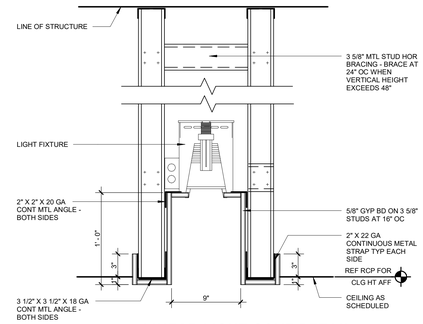

10 LINEAR LIGHT COVE DETAIL
1 1/2" = 1'-0"

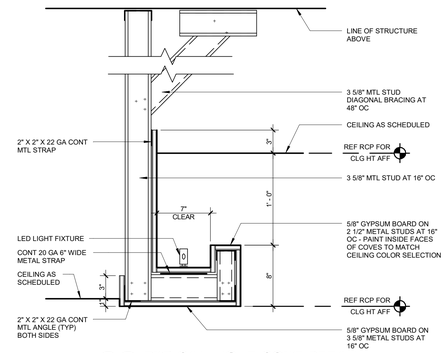

09 TYPICAL LIGHT COVE DETAIL
1 1/2" = 1'-0"

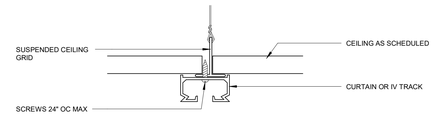

08 CURTAIN TRACK / IV TRACK - SUSPENDED ACOUSTICAL CEILING
3" = 1'-0"

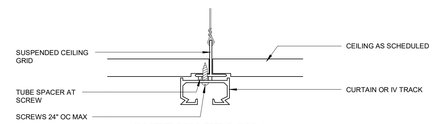

07 CURTAIN TRACK / IV TRACK - SUSPENDED TEGULAR ACOUSTICAL CEILINGS
3" = 1'-0"

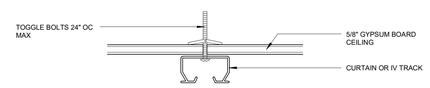

06 CURTAIN TRACK / IV TRACK - GYP BOARD CEILINGS
3" = 1'-0"

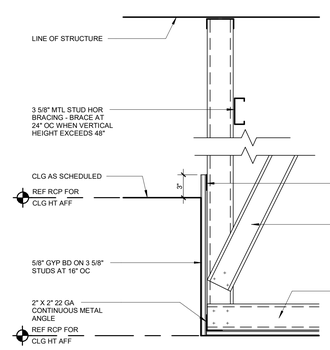

05 SOFFIT DETAIL
1 1/2" = 1'-0"

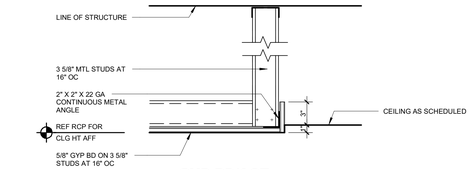

GYP BD/ACT
04 TRANSITION DETAIL
1 1/2" = 1'-0"

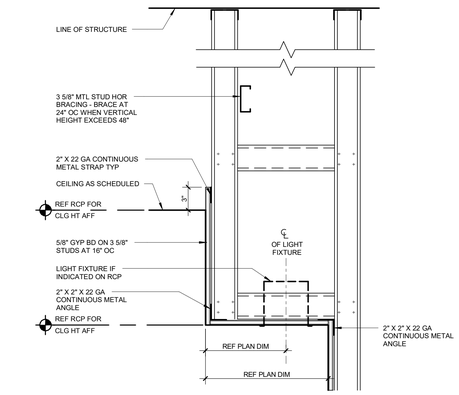

03 FURR DOWN DETAIL
1 1/2" = 1'-0"

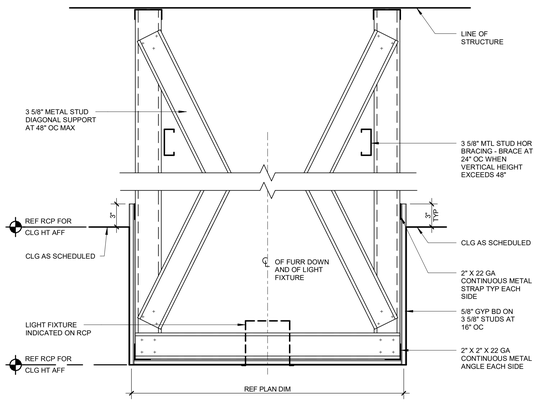

02 FURR DOWN DETAIL
1 1/2" = 1'-0"

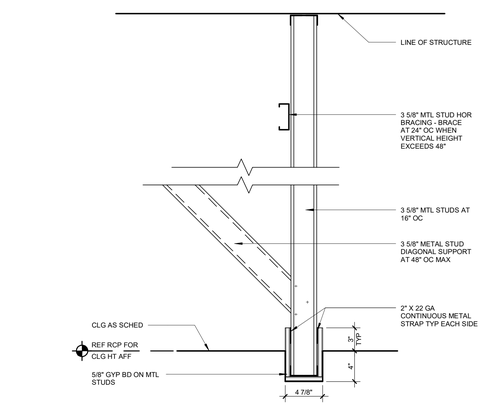

01 FURR DOWN DETAIL
1 1/2" = 1'-0"

GENERAL NOTE
REFERENCE A3.01 AND A3.02 FOR PARTITION TYPES AND FRAMING INFORMATION.

© 2026 HKS, INC.

HKS

ARCHITECT
HKS ARCHITECTS, INC.
90 SOUTH 400 WEST, #110
SALT LAKE CITY, UTAH 84101

CIVIL ENGINEER
GREAT BASIN ENGINEERING, INC
5746 SOUTH 1475 EAST
OGDEN, UTAH 84403

LANDSCAPE ARCHITECT
MGB+A STUDIO
145 WEST 200 SOUTH
SALT LAKE CITY, UTAH 84101

STRUCTURAL ENGINEER
REAVELEY ENGINEERS
250 EAST 200 SOUTH, SUITE 1000
SALT LAKE CITY, UTAH 84111

M/P/FP ENGINEER
RESOLUT GROUP
181 EAST 5600 SOUTH, SUITE 200
MURRAY, UTAH 84107

E/T ENGINEER
LYNK ENGINEERS
324 SOUTH STATE STREET, SUITE 400
SALT LAKE CITY, UTAH 84111

Intermountain Health

UTAH VALLEY SPORTS PERFORMANCE CENTER

PROJECT ADDRESS: WEST 880 NORTH 200 WEST PROVO, UTAH 84604

SEAL & SIGNATURE

KEY PLAN

REVISION

NO.	DESCRIPTION	DATE

HKS PROJECT NUMBER
27487.000

DATE
08/26/2026

ISSUE
DESIGN DEVELOPMENT

SHEET TITLE
CEILING DETAILS 01

SHEET NO.
A4.31

TITLE BLOCK VERSION: 20210930
PRINT DATE: 8/26/2026 1:35:37 PM TEMPLATE VERSION: 23.0.6 MODEL: Autodesk Docs://27487.000_IH - UV Sports Performance Center 2025/A_IHUV_Sports-Performance-Center_2025.rvt

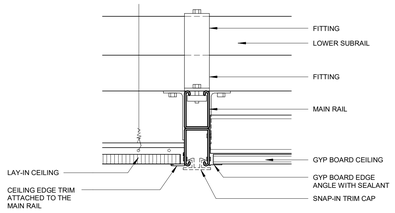

15 MAIN RAIL SECTION
3" = 1'-0"

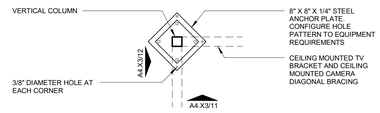

10 PLAN VIEW OF SUPPORT FOR CEILING MOUNTED TV BRACKET AND CEILING MOUNTED CAMERA
1" = 1'-0"

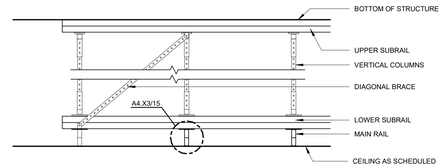

05 MODULAR MEDICAL EQUIPMENT SUPPORT SYSTEM
1/2" = 1'-0"

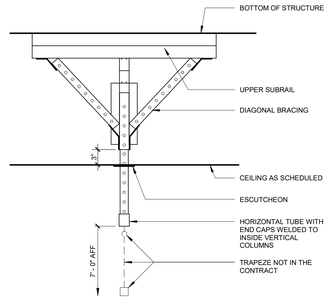

14 SIDE VIEW OF TRAPEZE SUPPORT STRUCTURE
1" = 1'-0"

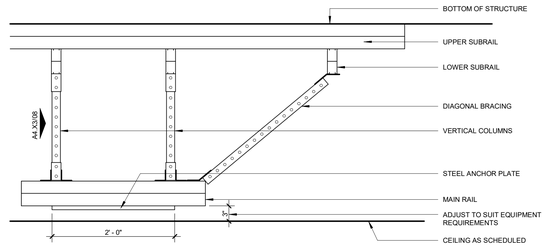

09 SIDE VIEW OF SUPPORT FOR SURGICAL LIGHTS, MEDICAL UTILITY COLUMNS AND MOTORIZED ARTICULATING SUPPORT COLUMNS
1" = 1'-0"

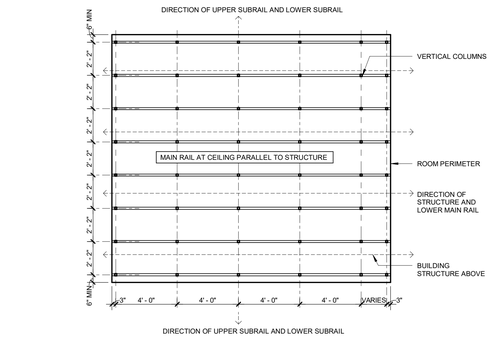

04 MODULAR MEDICAL EQUIPMENT SUPPORT SYSTEM PLAN
1/4" = 1'-0"

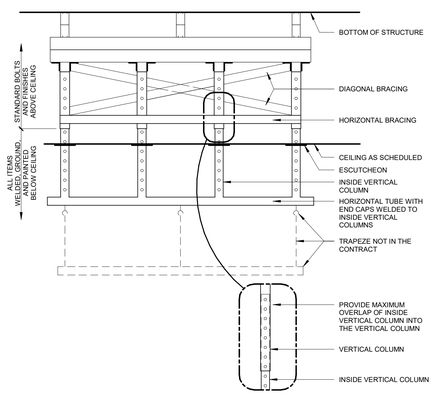

13 FRONT VIEW OF TRAPEZE SUPPORT STRUCTURE
1" = 1'-0"

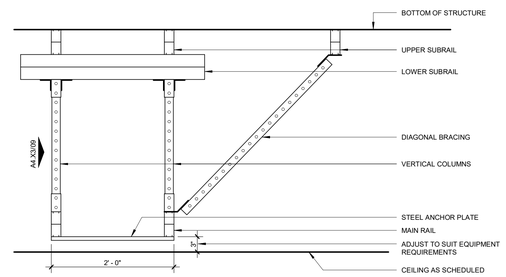

08 FRONT VIEW OF SUPPORT FOR SURGICAL LIGHTS, MEDICAL UTILITY COLUMNS AND MOTORIZED ARTICULATING SUPPORT COLUMNS
1" = 1'-0"

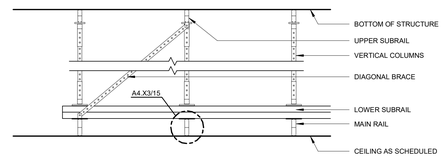

03 MODULAR MEDICAL EQUIPMENT SUPPORT SYSTEM SECTION
1/2" = 1'-0"

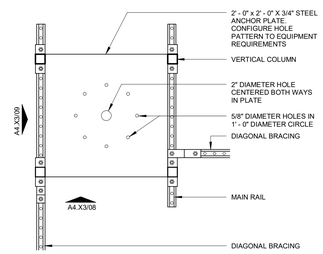

07 PLAN VIEW OF SUPPORT FOR SURGICAL LIGHTS, MEDICAL UTILITY COLUMNS AND MOTORIZED ARTICULATING SUPPORT COLUMNS
1" = 1'-0"

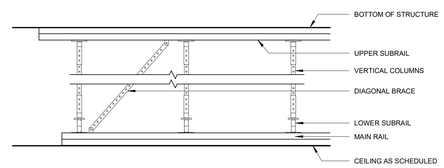

02 MODULAR MEDICAL EQUIPMENT SUPPORT SYSTEM SECTION
1/2" = 1'-0"

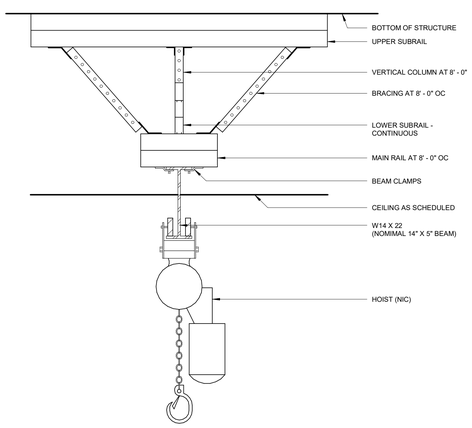

16 OVERHEAD HOIST SUPPORT
1" = 1'-0"

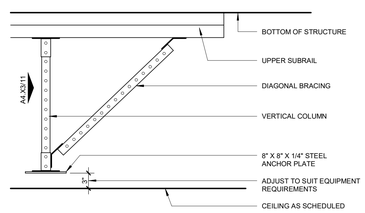

12 SIDE VIEW OF SUPPORT FOR CEILING MOUNTED TV BRACKET AND CEILING MOUNTED CAMERA
1" = 1'-0"

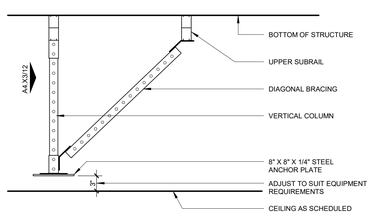

11 FRONT VIEW OF SUPPORT FOR CEILING MOUNTED TV BRACKET AND CEILING MOUNTED CAMERA
1" = 1'-0"

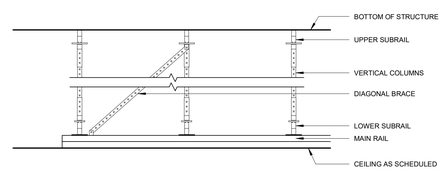

06 MODULAR MEDICAL EQUIPMENT SUPPORT SYSTEM
1/2" = 1'-0"

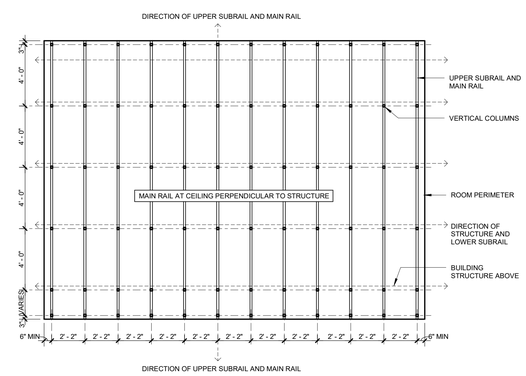

01 MODULAR MEDICAL EQUIPMENT SUPPORT SYSTEM PLAN
1/4" = 1'-0"

© 2026 HKS, INC.

HKS

ARCHITECT
HKS ARCHITECTS, INC.
90 SOUTH 400 WEST, #110
SALT LAKE CITY, UTAH 84101

CIVIL ENGINEER
GREAT BASIN ENGINEERING, INC
5746 SOUTH 1475 EAST
OGDEN, UTAH 84403

LANDSCAPE ARCHITECT
MGB+A STUDIO
145 WEST 200 SOUTH
SALT LAKE CITY, UTAH 84101

STRUCTURAL ENGINEER
REAVELEY ENGINEERS
250 EAST 200 SOUTH, SUITE 1000
SALT LAKE CITY, UTAH 84111

M/P/FP ENGINEER
RESOLUT GROUP
181 EAST 5600 SOUTH, SUITE 200
MURRAY, UTAH 84107

E/T ENGINEER
LYNK ENGINEERS
324 SOUTH STATE STREET, SUITE 400
SALT LAKE CITY, UTAH 84111

Intermountain Health

UTAH VALLEY SPORTS PERFORMANCE CENTER

PROJECT ADDRESS: WEST 880 NORTH 200 WEST PROVO, UTAH 84604

SEAL & SIGNATURE

KEY PLAN

REVISION

NO.	DESCRIPTION	DATE

HKS PROJECT NUMBER
27487.000

DATE
08/26/2026

ISSUE
DESIGN DEVELOPMENT

SHEET TITLE
SLOTTED CHANNEL SUPPORT DETAILS

SHEET NO.
A4.33

TITLE BLOCK VERSION: 20210930
MODEL: Autodesk Docs://27487.000_IH - UV Sports Performance Center 2025/A_IH-UV_Sports-Performance-Center_2025.rvt
PRINT DATE: 8/26/2026 1:35:39 PM TEMPLATE VERSION: 23.0.6

EXTERIOR DESIGN PALETTE

BRICK MASONRY - MV01
MANUFACTURER: INTERSTATE BRICK
COLOR: PEWTER
PATTERN: STACK BOND
SIZE: 4"D X 2-1/4"H X 16"L (NOMINAL) EMPEROR BRICK
TEXTURE: PLATINUM MATTE

BRICK MASONRY - MV02
MANUFACTURER: INTERSTATE BRICK
COLOR: COAL
PATTERN: STACK BOND
SIZE: 4"D X 2-1/4"H X 16"L (NOMINAL) EMPEROR BRICK
TEXTURE: PLATINUM MATTE

VISION GLASS - GL01
MANUFACTURER: VIRACON
TYPE: 1" VRE1-54 INSULATED GLASS WITH AIR FILLED SPACERS
COATING: VRE-54 #2 LOW E (#2)

SPANDREL GLASS - GL02
MANUFACTURER: VIRACON
TYPE: 1" VRE1-54 INSULATED GLASS WITH AIR FILLED SPACERS
ENAMEL COLOR: VR 953 MEDIUM GRAY
COATING: VRE1-54 LOW E (#2)

POLYCARBONATE SYSTEM - PC-01
MANUFACTURER: KINGSPAN
TYPE: 4.25" UNIQUAD SYSTEM
COLOR: ICE WHITE

ARCHITECTURAL METAL FINISH - AMF-01
TYPE: POLYVINYLIDENE FLUORIDE (PVDF), 3-COAT SYSTEM
BASIS OF DESIGN: MATCH CENTRIA "SUNDANCE AM" SYSTEM
COLOR: CENTRIA "9960 XL MEDIUM GRAY"

METAL WALL PANEL - FMP-01
MANUFACTURER: PAC-CLAD PETERSEN
TYPE: HIGHLINE PRECISION SERIES - S2
DIMENSIONS: 1 3/8" DEPTH X 16" WIDTH
COLOR: SLATE GRAY

EXTERIOR SOFFIT METAL PANEL - SMP-01
MANUFACTURER: HUNTER DOUGLAS CEILINGS
TYPE: DEEP BOX SERIES – EXTERIOR
COLOR: WALNUT

GLAZED ALUMINUM FRAMING SYSTEMS

PUNCHED WINDOW SYSTEM - GAFS-01
FINISH: AMF-01
SYSTEM: KAWNEER 601UT

CURTAIN WALL SYSTEM - GAFS-02
FINISH: AMF-01
SYSTEM: KAWNEER 1600UT
GLAZING: 1" DOUBLE GLAZED
GLASS TYPES: GL01 & GL02

STOREFRONT SYSTEM - GAFS-03
FINISH: AMF-01
SYSTEM: KAWNEER 601UT
GLASS TYPES: GL01 & GL02

HOLLOW METAL DOORS AND FRAMES

FINISH: WATER-BASED, LIGHT INDUSTRIAL COATING
COLOR: MATCH AMF-01

ROOF SYSTEMS

SINGLY PLY ROOF SYSTEM
MANUFACTURER: JOHNS MANVILLE
COLOR: WHITE

BUILDING SIGNAGE LEGEND

(A) VERTICAL (B) HORIZONTAL

(C) DIMENSIONAL LETTERING

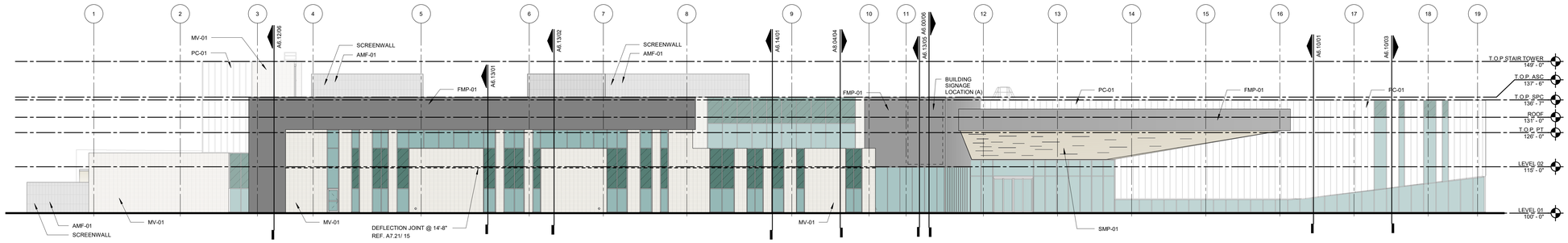

04 OVERALL WEST ELEVATION
1/16" = 1'-0"

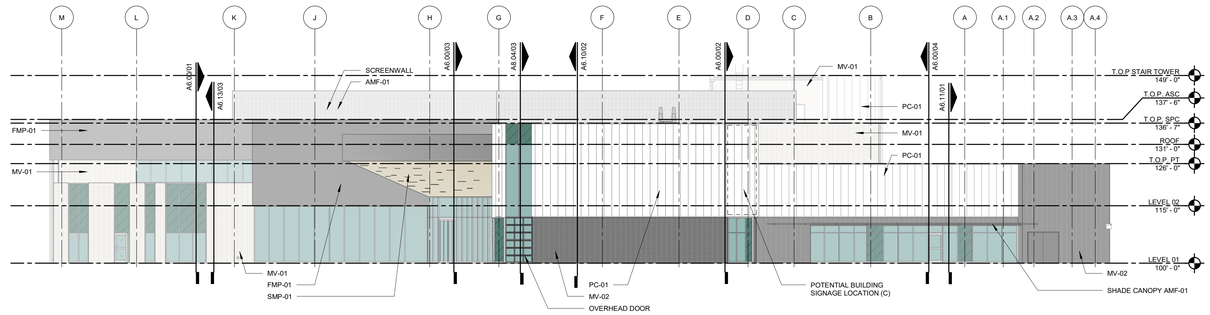

03 OVERALL SOUTH ELEVATION
1/16" = 1'-0"

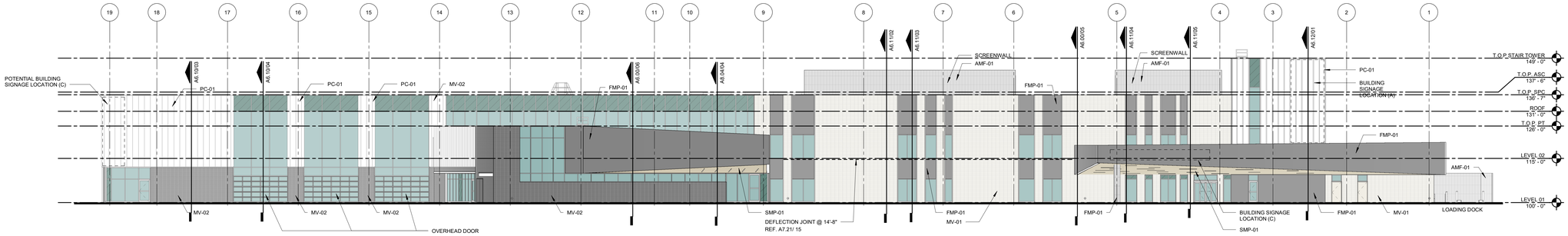

02 OVERALL EAST ELEVATION
1/16" = 1'-0"

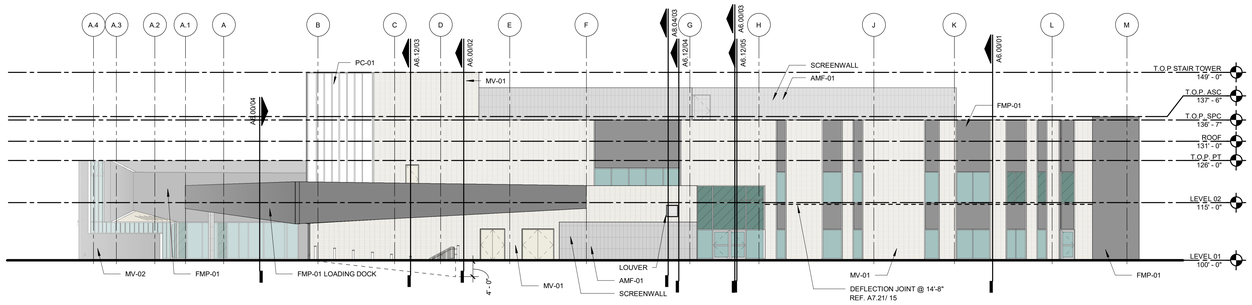

01 OVERALL EXTERIOR NORTH ELEVATION
1/16" = 1'-0"

© 2026 HKS, INC.

HKS

ARCHITECT
HKS ARCHITECTS, INC.
90 SOUTH 400 WEST, #110
SALT LAKE CITY, UTAH 84101

CIVIL ENGINEER
GREAT BASIN ENGINEERING, INC
5746 SOUTH 1475 EAST
OGDEN, UTAH 84403

LANDSCAPE ARCHITECT
MGB+A STUDIO
145 WEST 200 SOUTH
SALT LAKE CITY, UTAH 84101

STRUCTURAL ENGINEER
REAVELEY ENGINEERS
250 EAST 200 SOUTH, SUITE 1000
SALT LAKE CITY, UTAH 84111

M/P/FP ENGINEER
RESOLUT GROUP
181 EAST 5600 SOUTH, SUITE 200
MURRAY, UTAH 84107

E/T ENGINEER
LYNK ENGINEERS
324 SOUTH STATE STREET, SUITE 400
SALT LAKE CITY, UTAH 84111

Intermountain Health

UTAH VALLEY SPORTS PERFORMANCE CENTER

PROJECT ADDRESS: WEST 880 NORTH 200 WEST PROVO, UTAH 84604

SEAL & SIGNATURE

KEY PLAN

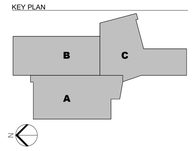

REVISION

NO.	DESCRIPTION	DATE

HKS PROJECT NUMBER
27487.000

DATE
08/26/2026

ISSUE
DESIGN DEVELOPMENT

SHEET TITLE
OVERALL EXTERIOR ELEVATIONS

SHEET NO.
A5.01

TITLE BLOCK VERSION: 20251630
MODEL: Autodesk Docs://27487.000_IH - UV Sports Performance Center 2025/A_IH-UV Sports Performance Center_2025.rvt
PRINT DATE: 8/26/2026 1:35:45 PM TEMPLATE VERSION: 23.0.6

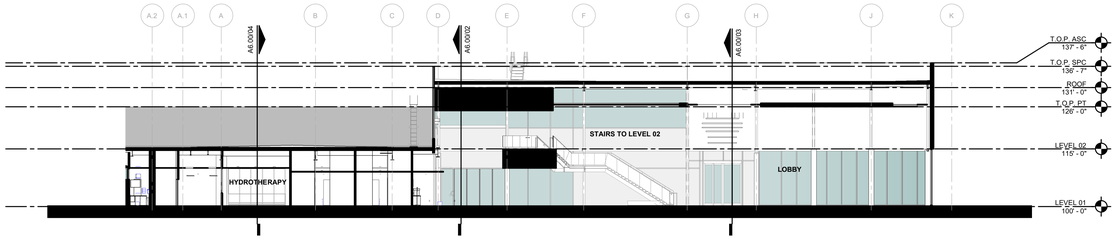

06 E/W BUILDING SECTION B
1/16" = 1'-0"

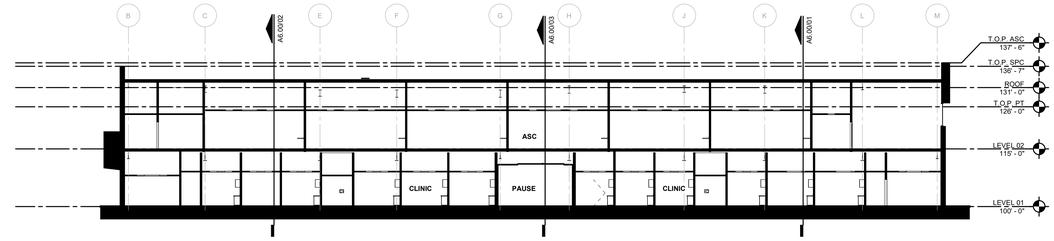

05 E/W BUILDING SECTION A
1/16" = 1'-0"

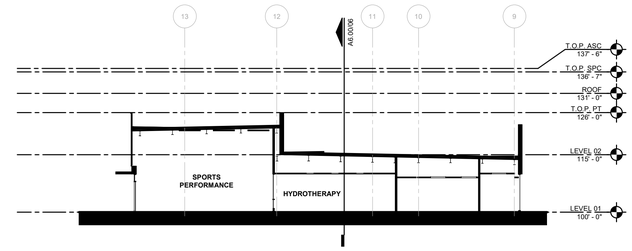

04 N/S BUILDING SECTION D
1/16" = 1'-0"

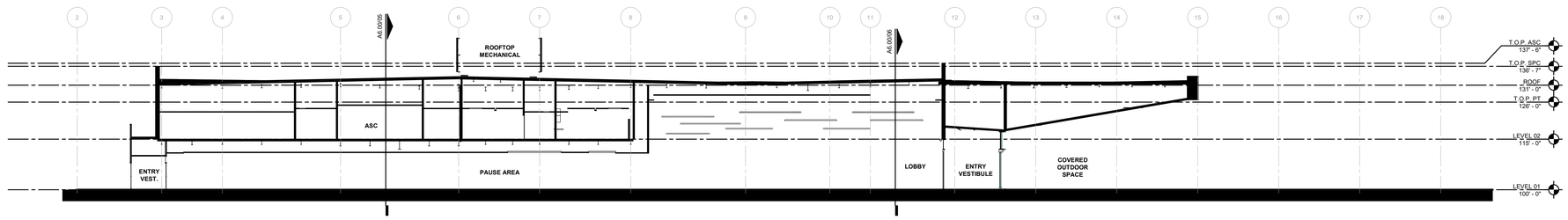

03 N/S BUILDING SECTION C
1/16" = 1'-0"

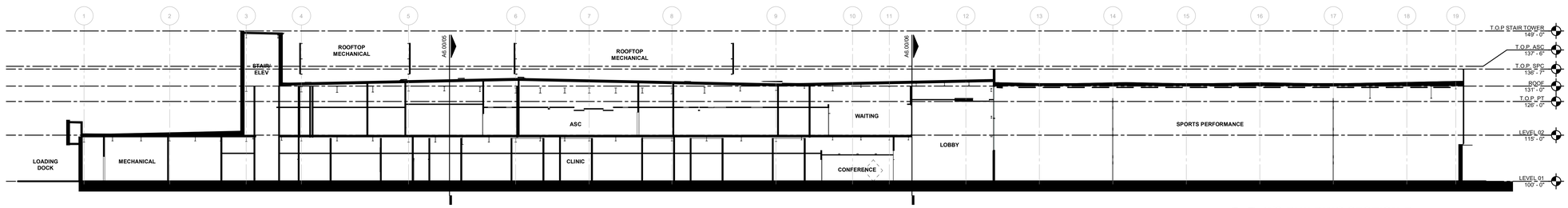

02 N/S BUILDING SECTION B
1/16" = 1'-0"

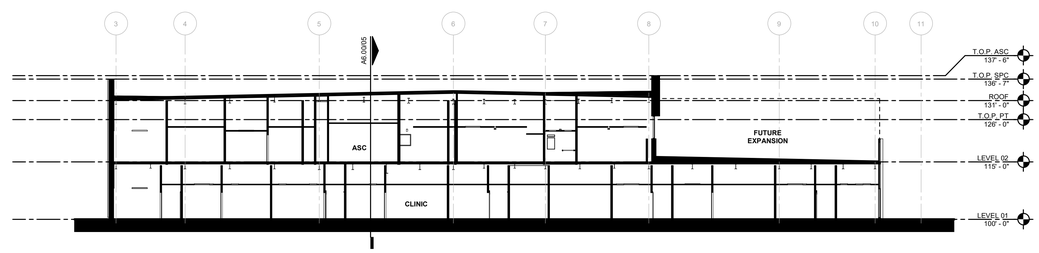

01 N/S BUILDING SECTION A
1/16" = 1'-0"

© 2026 HKS, INC.

HKS

ARCHITECT
HKS ARCHITECTS, INC.
90 SOUTH 400 WEST, #110
SALT LAKE CITY, UTAH 84101

CIVIL ENGINEER
GREAT BASIN ENGINEERING, INC
5746 SOUTH 1475 EAST
OGDEN, UTAH 84403

LANDSCAPE ARCHITECT
MGB+A STUDIO
145 WEST 200 SOUTH
SALT LAKE CITY, UTAH 84101

STRUCTURAL ENGINEER
REAVELEY ENGINEERS
250 EAST 200 SOUTH, SUITE 1000
SALT LAKE CITY, UTAH 84111

M/P/FP ENGINEER
RESOLUT GROUP
181 EAST 5600 SOUTH, SUITE 200
MURRAY, UTAH 84107

E/T ENGINEER
LYNK ENGINEERS
324 SOUTH STATE STREET, SUITE 400
SALT LAKE CITY, UTAH 84111

Intermountain Health

UTAH VALLEY SPORTS PERFORMANCE CENTER

PROJECT ADDRESS: WEST 880 NORTH 200 WEST PROVO, UTAH 84604

SEAL & SIGNATURE

KEY PLAN

REVISION

NO.	DESCRIPTION	DATE

HKS PROJECT NUMBER
27487.000

DATE
08/26/2026

ISSUE
DESIGN DEVELOPMENT

SHEET TITLE
BUILDING SECTIONS

SHEET NO.
A6.00

TITLE BLOCK VERSION: 20251630
MODEL: Autodesk Docs://27487.000_IH-UV Sports Performance Center 2025/A_IH-UV_Sports-Performance-Center_2025.rvt
PRINT DATE: 8/26/2026 1:55:51 PM TEMPLATE VERSION: 23.0.6

TITLE BLOCK VERSION: 20210930

MODEL: Autodesk Docs://27487.000_IH - UV Sports Performance Center 2025/A_IH-UV_Sports-Performance-Center_2025.rvt

PRINT DATE: 8/26/2026 1:56:04 PM TEMPLATE VERSION: 23.0.6

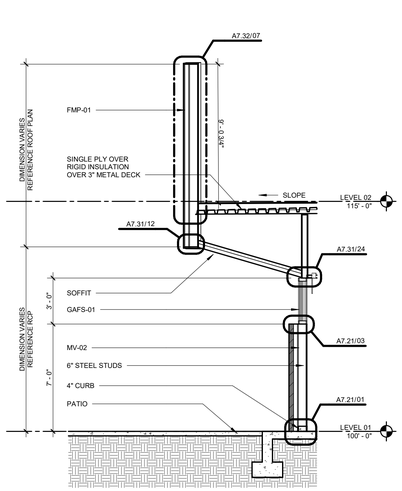

07 WALL SECTION AT STAFF BREAK CANOPY
1/4" = 1'-0"

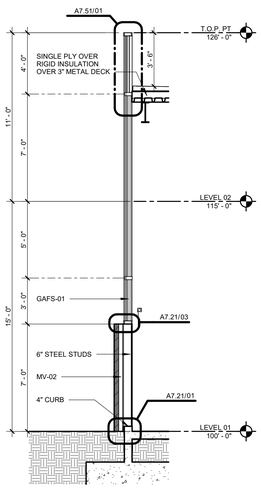

06 WALL SECTION AT MODALITY BAYS
1/4" = 1'-0"

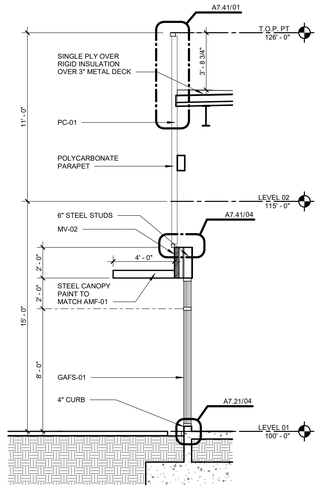

05 WALLS SECTION AT PT CANOPY
1/4" = 1'-0"

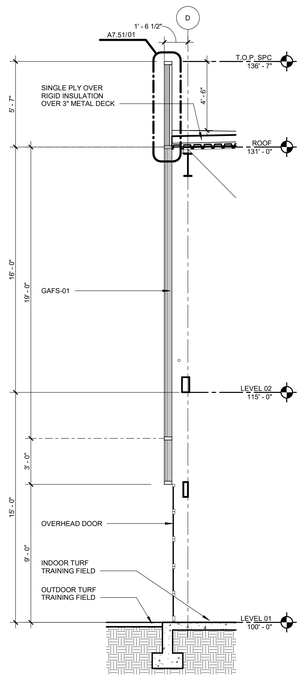

04 WALL SECTION AT ROLL-UP DOOR AND GLAZING
1/4" = 1'-0"

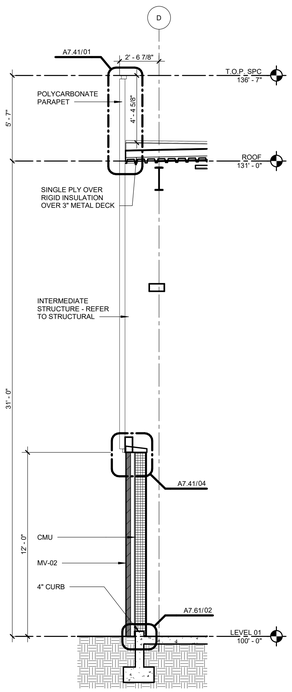

03 WALL SECTION AT CMU BALL WALL
1/4" = 1'-0"

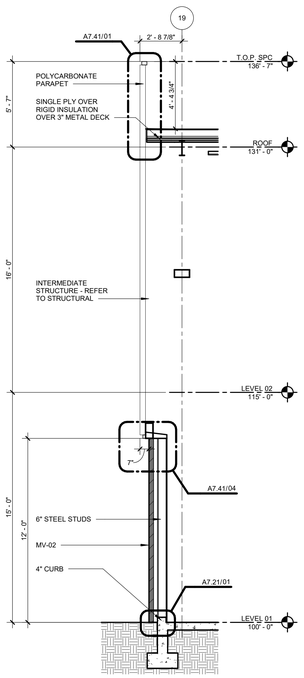

02 WALL SECTION AT POLYCARBONATE OVER BRICK
1/4" = 1'-0"

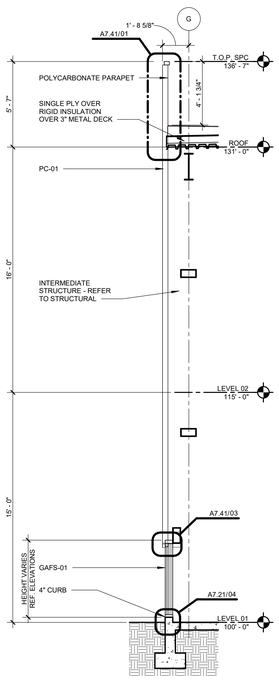

01 TYPICAL WALL SECTION AT POLYCARBONATE OVER GLAZING
1/4" = 1'-0"

© 2026 HKS, INC.

HKS

ARCHITECT
HKS ARCHITECTS, INC.
90 SOUTH 400 WEST, #110
SALT LAKE CITY, UTAH 84101

CIVIL ENGINEER
GREAT BASIN ENGINEERING, INC
5746 SOUTH 1475 EAST
OGDEN, UTAH 84403

LANDSCAPE ARCHITECT
MGB+A STUDIO
145 WEST 200 SOUTH
SALT LAKE CITY, UTAH 84101

STRUCTURAL ENGINEER
REAVELEY ENGINEERS
250 EAST 200 SOUTH, SUITE 1000
SALT LAKE CITY, UTAH 84111

M/P/FP ENGINEER
RESOLUT GROUP
181 EAST 5600 SOUTH, SUITE 200
MURRAY, UTAH 84107

E/T ENGINEER
LYNK ENGINEERS
324 SOUTH STATE STREET, SUITE 400
SALT LAKE CITY, UTAH 84111

Intermountain Health

UTAH VALLEY SPORTS PERFORMANCE CENTER

PROJECT ADDRESS: WEST 880 NORTH 200 WEST PROVO, UTAH 84604

SEAL & SIGNATURE

KEY PLAN

REVISION

NO.	DESCRIPTION	DATE

HKS PROJECT NUMBER
27487.000

DATE
08/26/2026

ISSUE
DESIGN DEVELOPMENT

SHEET TITLE
WALL SECTIONS

SHEET NO.
A6.10

TITLE BLOCK VERSION: 20210930

MODEL: Autodesk Docs://27487.000_IH_UV Sports Performance Center_2025/A_IH-UV Sports Performance Center_2025.rvt
PRINT DATE: 8/26/2026 1:35:07 PM TEMPLATE VERSION: 23.0.6

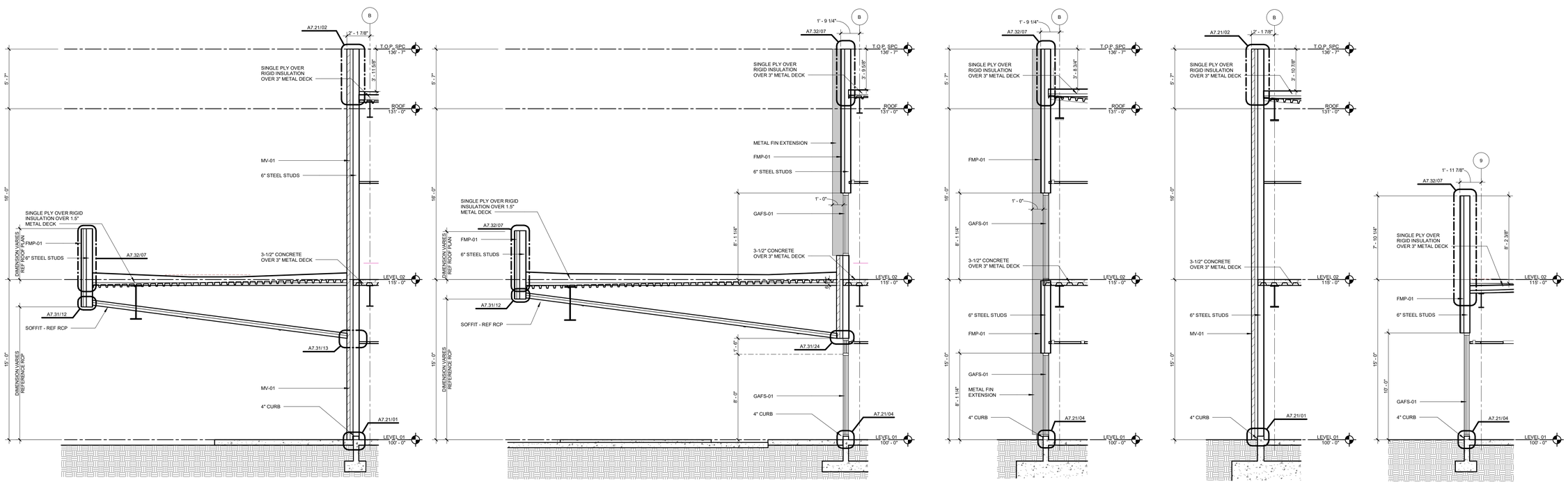

05 WALL SECTION AT DISCHARGE CANOPY AT BRICK
1/4" = 1'-0"

04 WALL SECTION AT DISCHARGE CANOPY AT GLAZING
1/4" = 1'-0"

03 WALL SECTION AT EAST GLAZING
1/4" = 1'-0"

02 WALL SECTION AT FULL HEIGHT BRICK
1/4" = 1'-0"

01 WALL SECTION AT GLAZING WITH BRICK ABOVE
1/4" = 1'-0"

HKS

ARCHITECT
HKS ARCHITECTS, INC.
90 SOUTH 400 WEST, #110
SALT LAKE CITY, UTAH 84101

CIVIL ENGINEER
GREAT BASIN ENGINEERING, INC
5746 SOUTH 1475 EAST
OGDEN, UTAH 84403

LANDSCAPE ARCHITECT
MGB+A STUDIO
145 WEST 200 SOUTH
SALT LAKE CITY, UTAH 84101

STRUCTURAL ENGINEER
REAVELEY ENGINEERS
250 EAST 200 SOUTH, SUITE 1000
SALT LAKE CITY, UTAH 84111

M/P/FP ENGINEER
RESOLUT GROUP
181 EAST 5600 SOUTH, SUITE 200
MURRAY, UTAH 84107

E/T ENGINEER
LYNK ENGINEERS
324 SOUTH STATE STREET, SUITE 400
SALT LAKE CITY, UTAH 84111

Intermountain Health

UTAH VALLEY SPORTS PERFORMANCE CENTER

PROJECT ADDRESS: WEST 880 NORTH 200 WEST PROVO, UTAH 84604

SEAL & SIGNATURE

KEY PLAN

REVISION

NO.	DESCRIPTION	DATE

HKS PROJECT NUMBER
27487.000

DATE
08/26/2026

ISSUE
DESIGN DEVELOPMENT

SHEET TITLE
WALL SECTIONS

SHEET NO.
A6.11

© 2026 HKS, INC.

TITLE BLOCK VERSION: 20251630

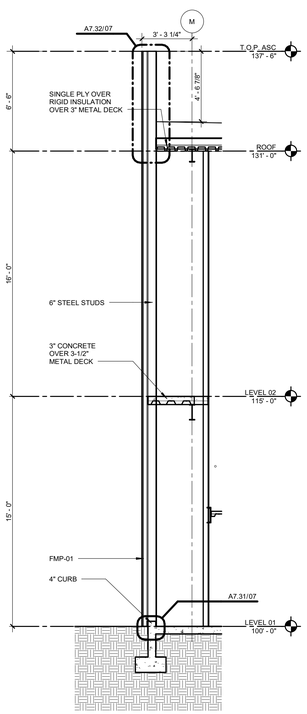

06 WALL SECTION AT FULL HEIGHT METAL PANEL
1/4" = 1'-0"

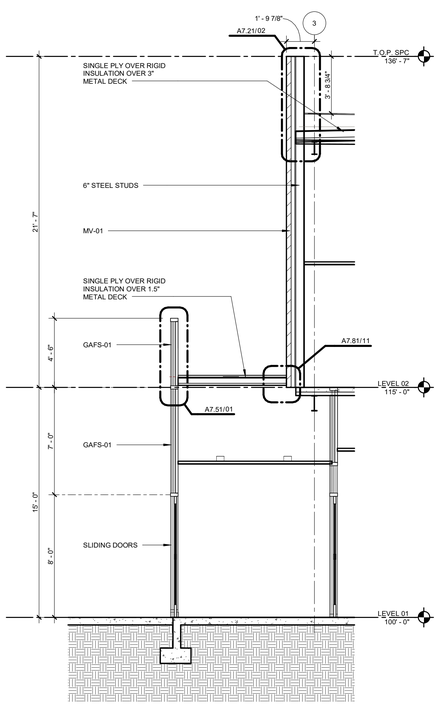

05 WALL SECTION AT NORTH VESTIBULE
1/4" = 1'-0"

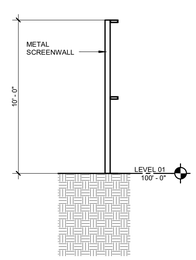

04 WALL SECTION AT GENERATOR YARD SCREEN
1/4" = 1'-0"

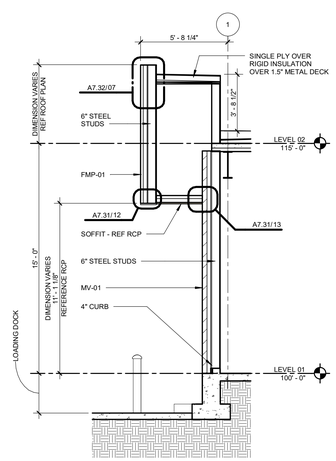

03 WALL SECTION AT LOADING DOCK
1/4" = 1'-0"

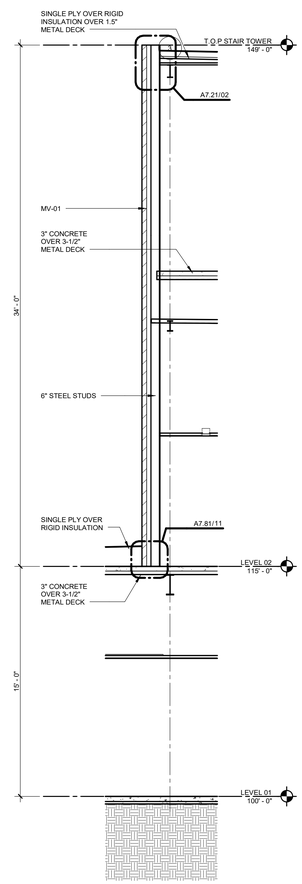

02 WALL SECTION AT ROOF ACCESS STAIR
1/4" = 1'-0"

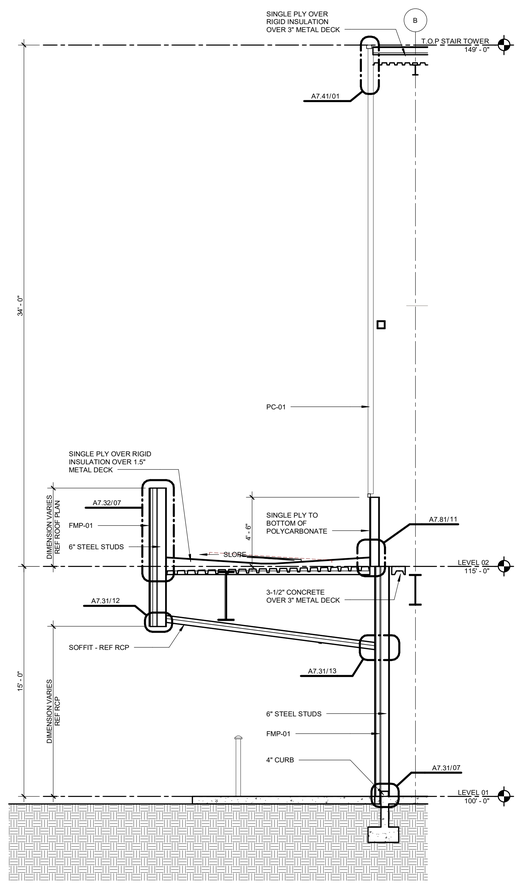

01 WALL SECTION AT STAIR AND DISCHARGE CANOPY
1/4" = 1'-0"

© 2026 HKS, INC.

HKS

ARCHITECT
HKS ARCHITECTS, INC.
90 SOUTH 400 WEST, #110
SALT LAKE CITY, UTAH 84101

CIVIL ENGINEER
GREAT BASIN ENGINEERING, INC
5746 SOUTH 1475 EAST
OGDEN, UTAH 84403

LANDSCAPE ARCHITECT
MGB+A STUDIO
145 WEST 200 SOUTH
SALT LAKE CITY, UTAH 84101

STRUCTURAL ENGINEER
REAVELEY ENGINEERS
250 EAST 200 SOUTH, SUITE 1000
SALT LAKE CITY, UTAH 84111

M/P/FP ENGINEER
RESOLUT GROUP
181 EAST 5600 SOUTH, SUITE 200
MURRAY, UTAH 84107

E/T ENGINEER
LYNK ENGINEERS
324 SOUTH STATE STREET, SUITE 400
SALT LAKE CITY, UTAH 84111

Intermountain Health

UTAH VALLEY SPORTS PERFORMANCE CENTER

PROJECT ADDRESS: WEST 880 NORTH 200 WEST PROVO, UTAH 84604

SEAL & SIGNATURE

KEY PLAN

REVISION

NO.	DESCRIPTION	DATE

HKS PROJECT NUMBER
27487.000

DATE
08/26/2026

ISSUE
DESIGN DEVELOPMENT

SHEET TITLE
WALL SECTIONS

SHEET NO.
A6.12

PRINT DATE: 8/26/2026 1:55:09 PM TEMPLATE VERSION: 23.0.6 MODEL: Autodesk Docs://27487.000 H-UV Sports Performance Center 2025/A H-UV Sports Performance Center_2025.rvt

TITLE BLOCK VERSION: 20210930

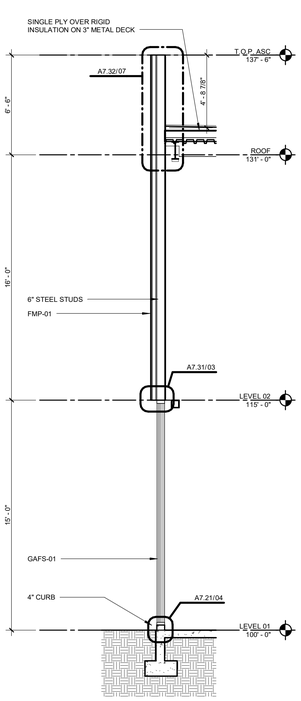

05 WALL SECTION AT METAL PANEL OVER GLAZING
1/4" = 1'-0"

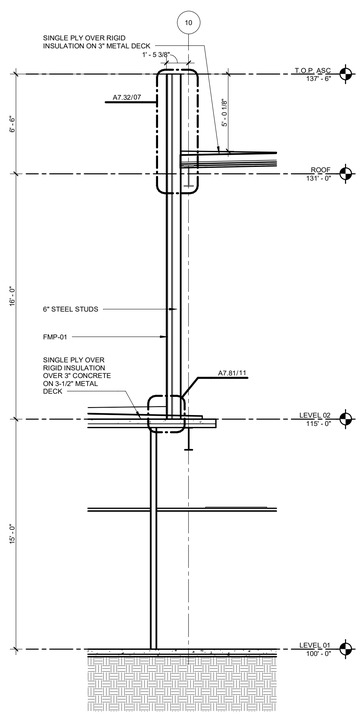

04 WALL SECTION AT METAL PANEL OVER LOW ROOF
1/4" = 1'-0"

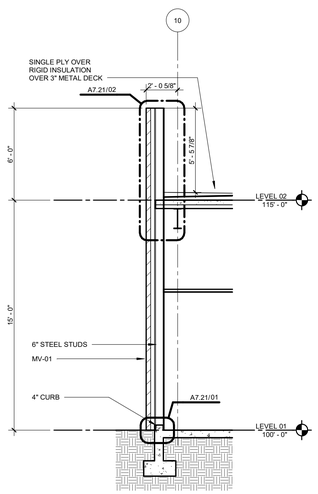

03 WALL SECTION AT LOW ROOF FULL HEIGHT BRICK
1/4" = 1'-0"

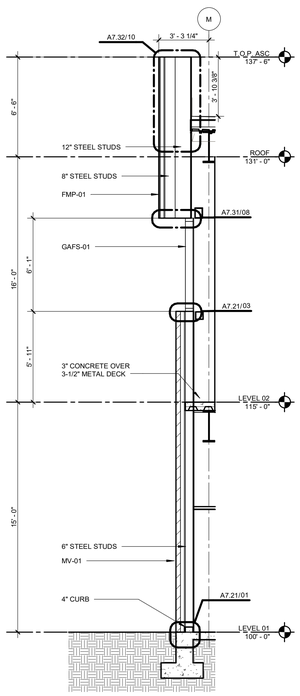

02 WALL SECTION AT METAL PANEL OVERHANG ABOVE BRICK
1/4" = 1'-0"

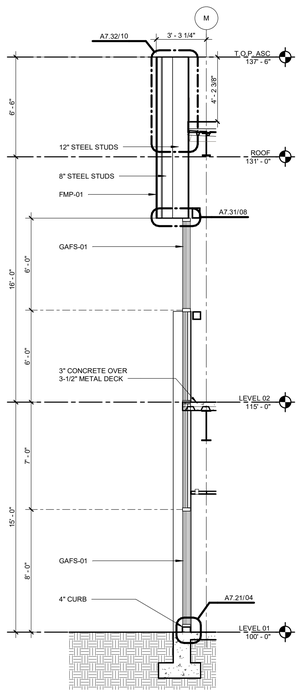

01 WALL SECTION AT METAL PANEL OVERHANG ABOVE GLAZING
1/4" = 1'-0"

© 2026 HKS, INC.

HKS

ARCHITECT
HKS ARCHITECTS, INC.
90 SOUTH 400 WEST, #110
SALT LAKE CITY, UTAH 84101

CIVIL ENGINEER
GREAT BASIN ENGINEERING, INC
5746 SOUTH 1475 EAST
OGDEN, UTAH 84403

LANDSCAPE ARCHITECT
MGB+A STUDIO
145 WEST 200 SOUTH
SALT LAKE CITY, UTAH 84101

STRUCTURAL ENGINEER
REAVELEY ENGINEERS
250 EAST 200 SOUTH, SUITE 1000
SALT LAKE CITY, UTAH 84111

M/P/FP ENGINEER
RESOLUT GROUP
181 EAST 5600 SOUTH, SUITE 200
MURRAY, UTAH 84107

E/T ENGINEER
LYNK ENGINEERS
324 SOUTH STATE STREET, SUITE 400
SALT LAKE CITY, UTAH 84111

Intermountain Health

UTAH VALLEY SPORTS PERFORMANCE CENTER

PROJECT ADDRESS: WEST 880 NORTH 200 WEST PROVO, UTAH 84604

SEAL & SIGNATURE

KEY PLAN

REVISION

NO.	DESCRIPTION	DATE

HKS PROJECT NUMBER
27487.000

DATE
08/26/2026

ISSUE
DESIGN DEVELOPMENT

SHEET TITLE
WALL SECTIONS

SHEET NO.
A6.13

PRINT DATE: 8/26/2026 1:36:02 PM TEMPLATE VERSION: 23.0.6 MODEL: Autodesk Docs://27487.000_IH_UV Sports Performance Center_2025/A_IH-UV Sports Performance Center_2025.rvt

TITLE BLOCK VERSION: 20251630

PRINT DATE: 8/26/2026 1:36:04 PM TEMPLATE VERSION: 23.0.6 MODEL: Autodesk Docs://27487.000_IH - UV Sports Performance Center_2025/A_IH-UV Sports Performance Center_2025.rvt

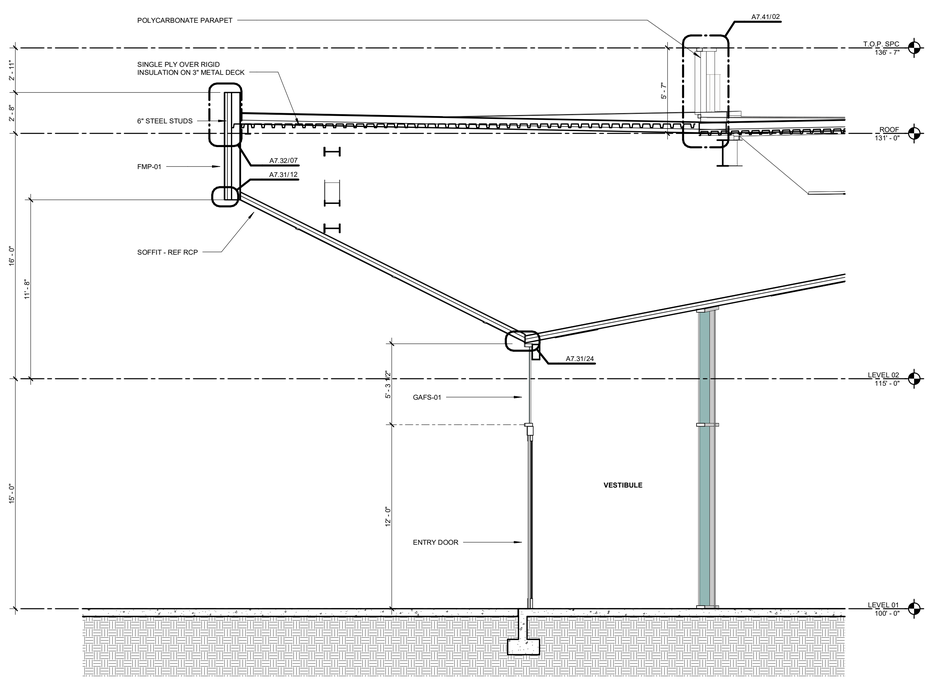

03 WALL SECTION AT ENTRY CANOPY
1/4" = 1'-0"

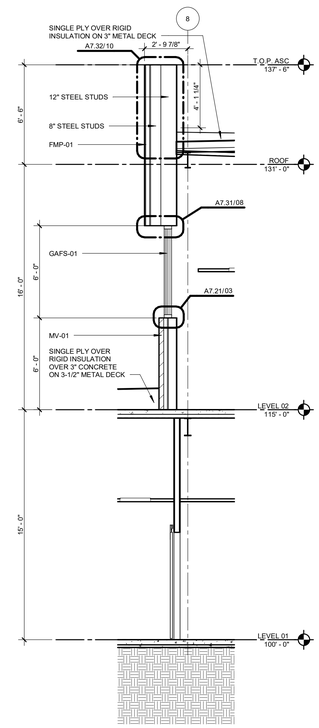

02 WALL SECTION AT PACU CLERESTORIES OVER LOW ROOF
1/4" = 1'-0"

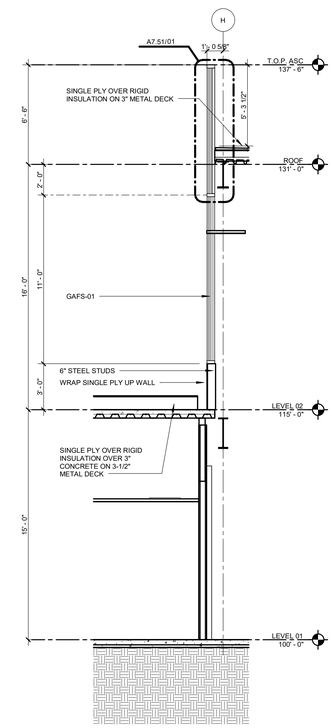

01 WALL SECTION AT GLAZING OVER LOW ROOF
1/4" = 1'-0"

HKS

ARCHITECT
HKS ARCHITECTS, INC.
90 SOUTH 400 WEST, #110
SALT LAKE CITY, UTAH 84101

CIVIL ENGINEER
GREAT BASIN ENGINEERING, INC
5746 SOUTH 1475 EAST
OGDEN, UTAH 84403

LANDSCAPE ARCHITECT
MGB+A STUDIO
145 WEST 200 SOUTH
SALT LAKE CITY, UTAH 84101

STRUCTURAL ENGINEER
REAVELEY ENGINEERS
250 EAST 200 SOUTH, SUITE 1000
SALT LAKE CITY, UTAH 84111

M/P/FP ENGINEER
RESOLUT GROUP
181 EAST 5600 SOUTH, SUITE 200
MURRAY, UTAH 84107

E/T ENGINEER
LYNK ENGINEERS
324 SOUTH STATE STREET, SUITE 400
SALT LAKE CITY, UTAH 84111

Intermountain Health

UTAH VALLEY SPORTS PERFORMANCE CENTER

PROJECT ADDRESS: WEST 880 NORTH 200 WEST PROVO, UTAH 84604

SEAL & SIGNATURE

KEY PLAN

REVISION

NO.	DESCRIPTION	DATE

HKS PROJECT NUMBER
27487.000

DATE
08/26/2026

ISSUE
DESIGN DEVELOPMENT

SHEET TITLE
WALL SECTIONS

SHEET NO.
A6.14

© 2026 HKS, INC.

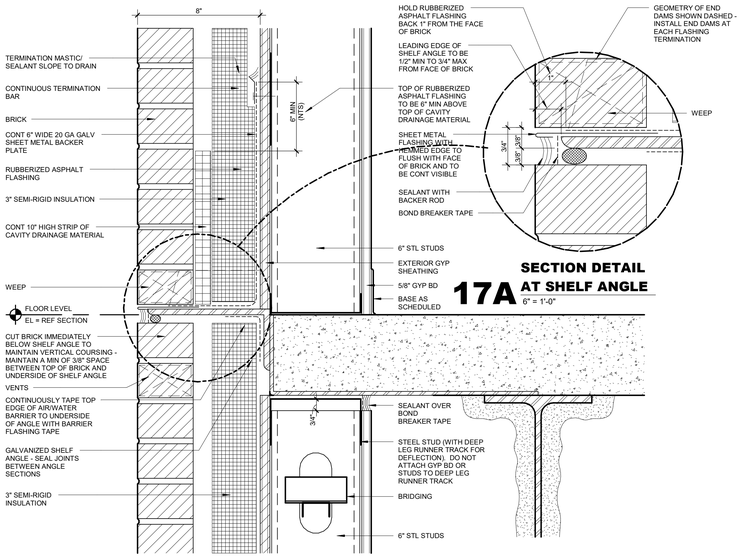

15 SECTION DETAIL AT SHELF ANGLE AND DEFLECTION JOINT AT FLOOR
3" = 1'-0"

17A SECTION DETAIL AT SHELF ANGLE
6" = 1'-0"

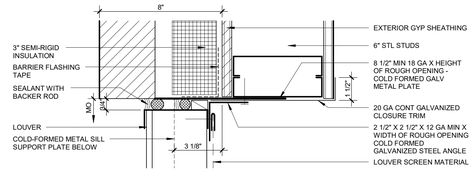

09 LOUVER JAMB DETAIL
3" = 1'-0"

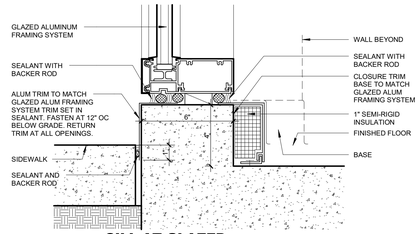

04 SILL AT GLAZED ALUMINUM FRAMING SYSTEM
3" = 1'-0"

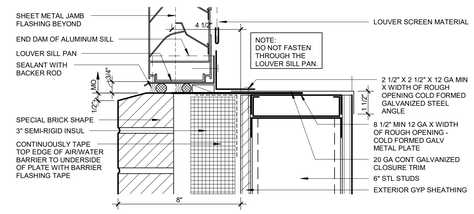

08 LOUVER SILL DETAIL
3" = 1'-0"

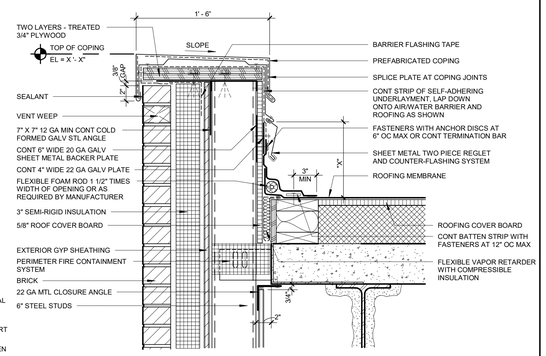

02 METAL COPING DETAIL - SINGLE PLY ROOFING
1 1/2" = 1'-0"

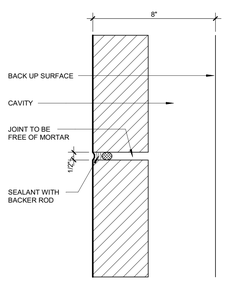

14 BRICK EXPANSION JOINT PLAN
3" = 1'-0"

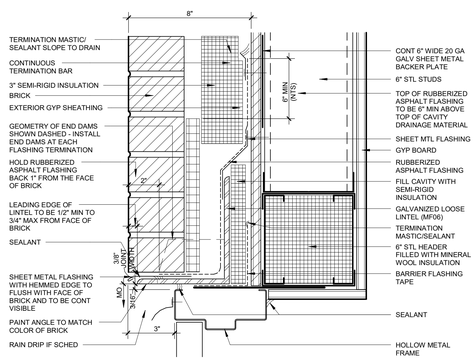

13 HEAD DETAIL
3" = 1'-0"

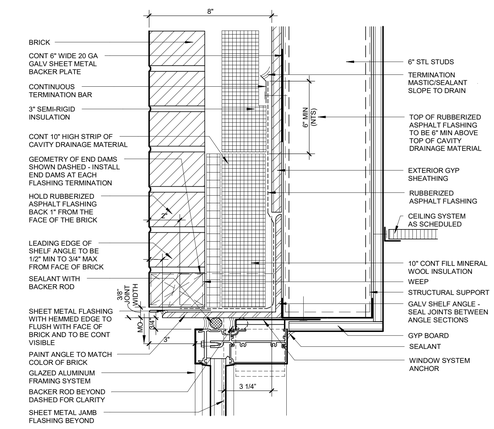

07 HEAD DETAIL AT GLAZED ALUMINUM FRAMING SYSTEM
3" = 1'-0"

01 BRICK LEDGE AT FOUNDATION WALL - LEDGE ABOVE ADJACENT GRADE
3" = 1'-0"

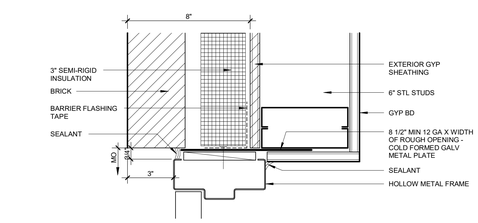

12 BRICK/METAL JAMB DETAIL
3" = 1'-0"

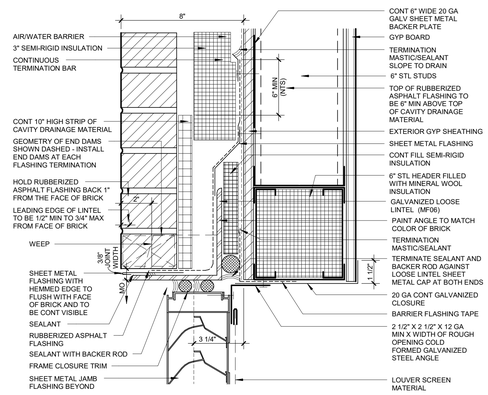

10 LOUVER HEAD DETAIL LESS THAN 10 FEET - LOOSE LINTEL
3" = 1'-0"

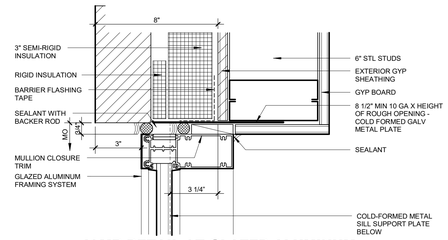

06 JAMB DETAIL AT GLAZED ALUMINUM FRAMING SYSTEM WITH JAMB ATTACHMENT
3" = 1'-0"

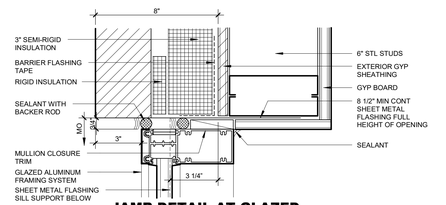

05 JAMB DETAIL AT GLAZED ALUMINUM FRAMING SYSTEM WITH NO JAMB ATTACHEMENT
3" = 1'-0"

GENERAL NOTES

THE BRICK VENEER WALL ASSEMBLY IS DESIGNED AS AN INTEGRATED SYSTEM REQUIRING COORDINATION BY THE CONTRACTOR OF THE INSTALLATION AND INTERFACE OF INTERNAL SYSTEM COMPONENTS AND ADJACENT SYSTEMS. THE SYSTEM MUST ACCOMMODATE WATER PENETRATION OF THE BRICK AND PROVIDE AN UNOBSTRUCTED PATH FOR WEEPING WATER TO THE EXTERIOR. WATER WHICH DOES PENETRATE THE BRICK MUST NOT PENETRATE THE AIR/WATER BARRIER AND ASSOCIATED FLASHING AND MUST BE WEEPED TO THE EXTERIOR WHEN INTERSECTING FLASHING AT DOORS, WINDOWS, ROOFS, AND ASSEMBLY PERIMETER. THE INTEGRITY OF THE AIR/WATER BARRIER AND ASSOCIATED FLASHING MUST BE MAINTAINED TO PREVENT PENETRATING WATER FROM MIGRATING ANYWHERE OTHER THAN TO THE EXTERIOR.

BRICK EXPANSION JOINTS (EJ): TO BE PLACED AT 26'-0" MAX AND WITHIN 10'-0" OF OUTSIDE CORNERS, 4'-0" PREFERRED UNO AT EXTERIOR ELEVATIONS.

THE DETAILS ON THIS SHEET ARE INTENDED TO ANNOTATE TYPICAL CONSTRUCTION COMPONENTS AND APPLY TO SIMILAR AREAS THROUGHOUT THE PROJECT UNO.

REFER TO FLASHING SHAPE DETAIL FOR SPECIFIC DIMENSIONS.

REF SHEET A3.11 FOR METAL FABRICATION (MF) DETAILS.

BASIS OF DESIGN FOR GLAZED ALUMINUM FRAMING SYSTEM IS KAWNEER 2250IG WITH HEAD DETAIL THAT INCLUDES AN OPTIONAL PRESSURE PLATE. INTENT IS TO PROVIDE A WINDOW SYSTEM THAT ACCOMMODATES THE DOUBLE SEALANT APPROACH AS SHOWN IN THE DETAILS.

HKS

ARCHITECT
HKS ARCHITECTS, INC.
90 SOUTH 400 WEST, #110
SALT LAKE CITY, UTAH 84101

CIVIL ENGINEER
GREAT BASIN ENGINEERING, INC
5746 SOUTH 1475 EAST
OGDEN, UTAH 84403

LANDSCAPE ARCHITECT
MGB+A STUDIO
145 WEST 200 SOUTH
SALT LAKE CITY, UTAH 84101

STRUCTURAL ENGINEER
REAVELEY ENGINEERS
250 EAST 200 SOUTH, SUITE 1000
SALT LAKE CITY, UTAH 84111

M/P/FP ENGINEER
RESOLUT GROUP
181 EAST 5600 SOUTH, SUITE 200
MURRAY, UTAH 84107

E/T ENGINEER
LYNK ENGINEERS
324 SOUTH STATE STREET, SUITE 400
SALT LAKE CITY, UTAH 84111

Intermountain Health

UTAH VALLEY SPORTS PERFORMANCE CENTER

PROJECT ADDRESS: WEST 880 NORTH 200 WEST PROVO, UTAH 84604

SEAL & SIGNATURE

KEY PLAN

REVISION

NO.	DESCRIPTION	DATE

HKS PROJECT NUMBER
27487.000

DATE
08/26/2026

ISSUE
DESIGN DEVELOPMENT

SHEET TITLE
BRICK DETAILS

SHEET NO.
A7.21

© 2026 HKS, INC.

TITLE BLOCK VERSION: 20210930
MODEL: Autodesk Docs://27487.000_IH_UV Sports Performance Center_2025/A_IHUV_Sports Performance Center_2025.rvt
PRINT DATE: 8/26/2026 1:38:07 PM TEMPLATE VERSION: 23.0.6

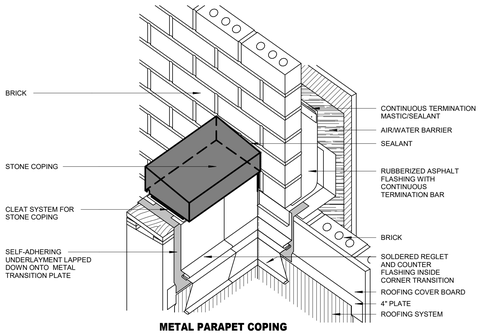

METAL PARAPET COPING INTERSECTION AT WALL - STEP 5
NTS

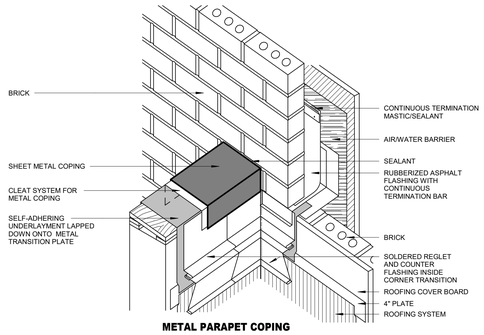

METAL PARAPET COPING INTERSECTION AT WALL - STEP 5
NTS

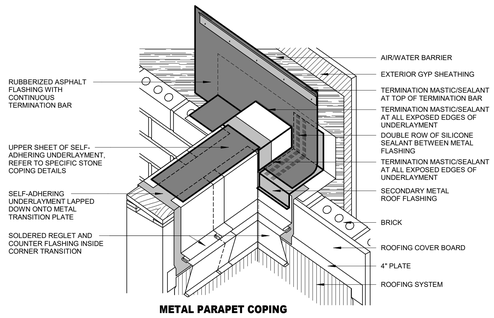

METAL PARAPET COPING INTERSECTION AT WALL - STEP 4
NTS

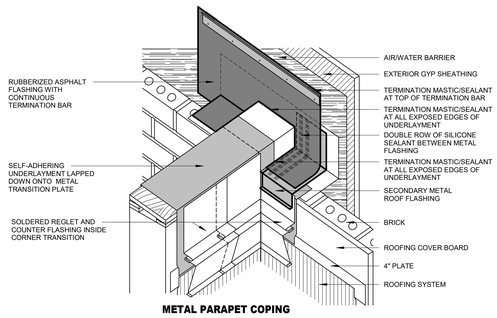

METAL PARAPET COPING INTERSECTION AT WALL - STEP 4
NTS

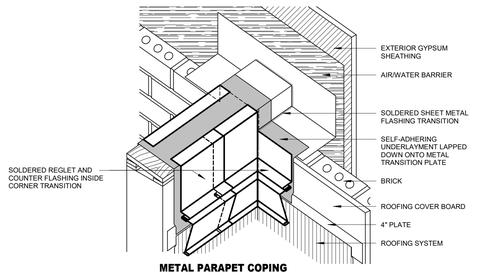

METAL PARAPET COPING INTERSECTION AT WALL - STEP 3
NTS

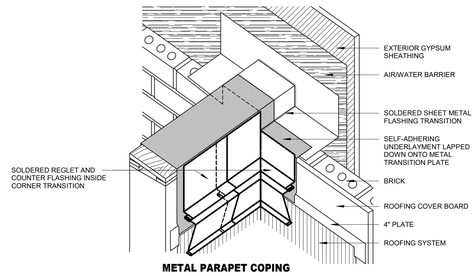

METAL PARAPET COPING INTERSECTION AT WALL - STEP 3
NTS

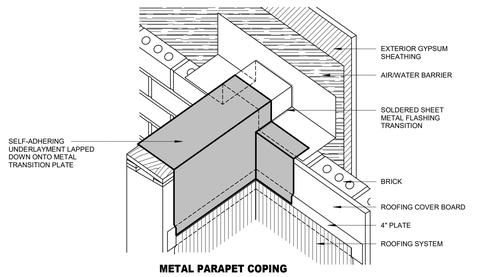

METAL PARAPET COPING INTERSECTION AT WALL - STEP 2
NTS

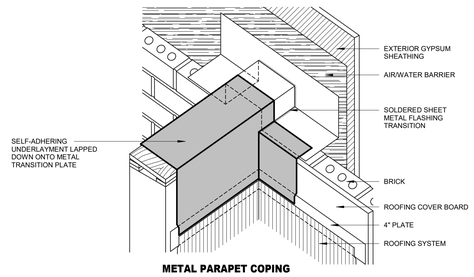

METAL PARAPET COPING INTERSECTION AT WALL - STEP 2
NTS

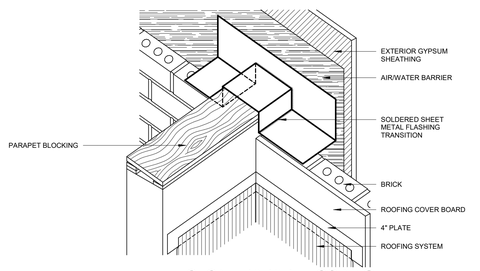

12 STONE PARAPET COPING INTERSECTION AT WALL - STEP 1
NTS

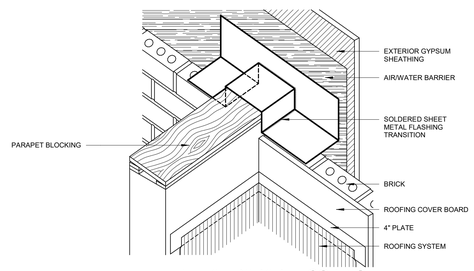

11 METAL PARAPET COPING INTERSECTION AT WALL - STEP 1
NTS SOME COMPONENTS OMITTED FOR CLARITY. REFER TO SPECIFIC DETAILS FOR FURTHER INFORMATION.

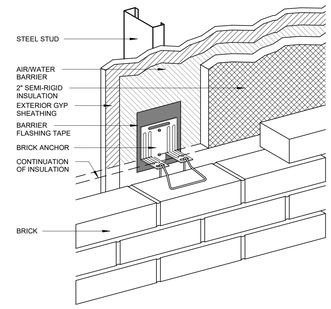

08 BRICK ANCHOR AT SEMI-RIGID INSULATION
NTS

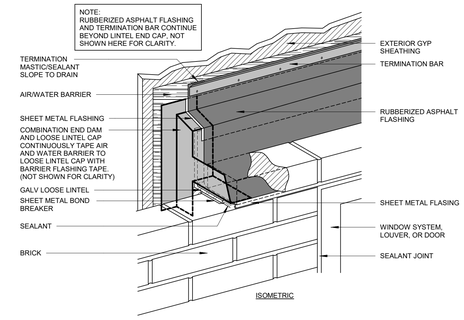

ISOMETRIC

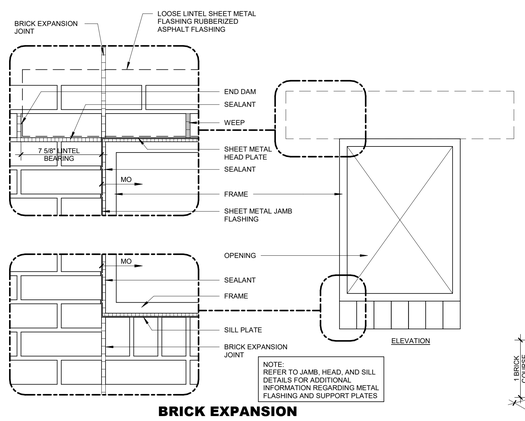

ELEVATION

07 BRICK EXPANSION JOINT AT WINDOW OPENING
NTS

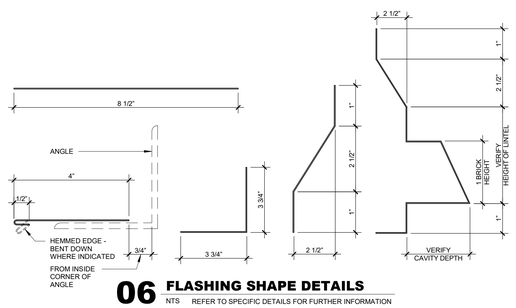

06 FLASHING SHAPE DETAILS
NTS REFER TO SPECIFIC DETAILS FOR FURTHER INFORMATION

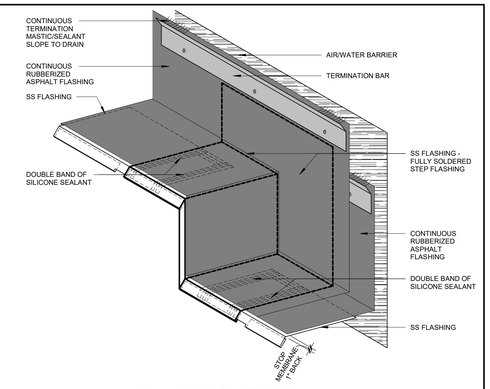

05 STEP FLASHING
3" = 1'-0"

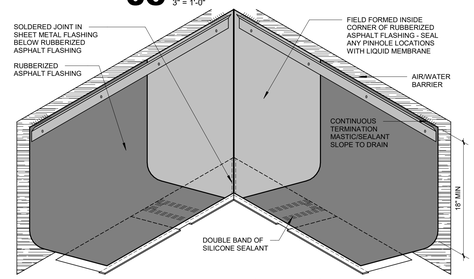

PREFABRICATED SOLDERED INSIDE CORNER FLASHING
04 NTS

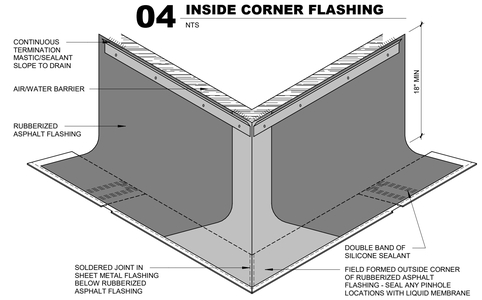

PREFABRICATED SOLDERED OUTSIDE CORNER FLASHING
03 NTS

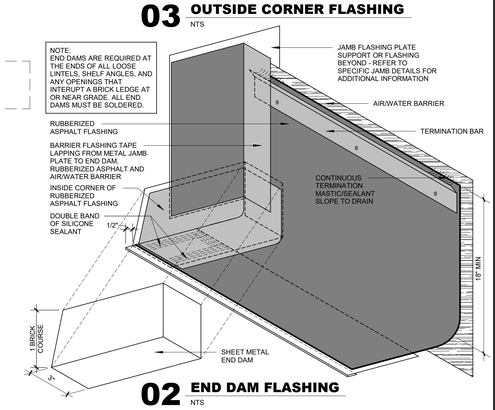

02 END DAM FLASHING
NTS

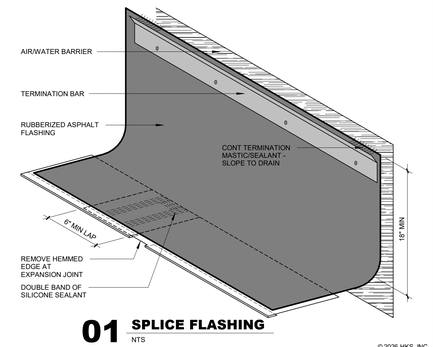

01 SPLICE FLASHING
NTS

© 2026 HKS, INC.

HKS

ARCHITECT
HKS ARCHITECTS, INC.
90 SOUTH 400 WEST, #110
SALT LAKE CITY, UTAH 84101

CIVIL ENGINEER
GREAT BASIN ENGINEERING, INC
5746 SOUTH 1475 EAST
OGDEN, UTAH 84403

LANDSCAPE ARCHITECT
MGB+A STUDIO
145 WEST 200 SOUTH
SALT LAKE CITY, UTAH 84101

STRUCTURAL ENGINEER
REAVELEY ENGINEERS
250 EAST 200 SOUTH, SUITE 1000
SALT LAKE CITY, UTAH 84111

M/P/FP ENGINEER
RESOLUT GROUP
181 EAST 5600 SOUTH, SUITE 200
MURRAY, UTAH 84107

E/T ENGINEER
LYNK ENGINEERS
324 SOUTH STATE STREET, SUITE 400
SALT LAKE CITY, UTAH 84111

Intermountain Health

UTAH VALLEY SPORTS PERFORMANCE CENTER

PROJECT ADDRESS: WEST 880 NORTH 200 WEST PROVO, UTAH 84604

SEAL & SIGNATURE

KEY PLAN

REVISION

NO.	DESCRIPTION	DATE

HKS PROJECT NUMBER
27487.000

DATE
08/26/2026

ISSUE
DESIGN DEVELOPMENT

SHEET TITLE
BRICK DETAILS

SHEET NO.
A7.22

TITLE BLOCK VERSION: 20210930
MODEL: Autodesk Docs://27487.000_HI_UV Sports Performance Center_2025/A_HI-UV_Sports Performance Center_2025.rvt
PRINT DATE: 8/26/2026 1:07:09 PM TEMPLATE VERSION: 23.0.6

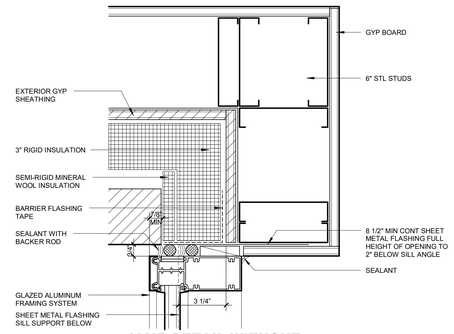

JAMB DETAIL WITHOUT JAMB ATTACHMENT MASONRY PERPENDICULAR TO WINDOW

04 3" = 1'-0"

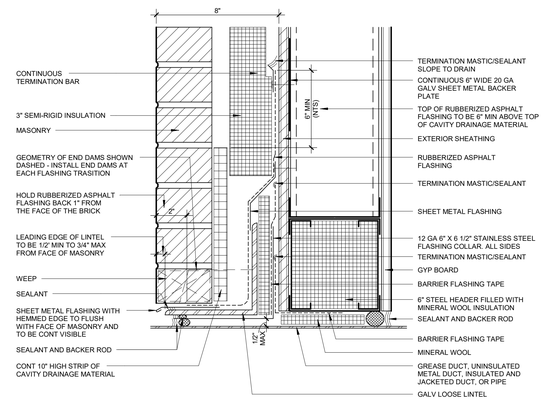

HEAD DETAIL AT DUCT OR INSULATED PIPE PENETRATION

06 3" = 1'-0"

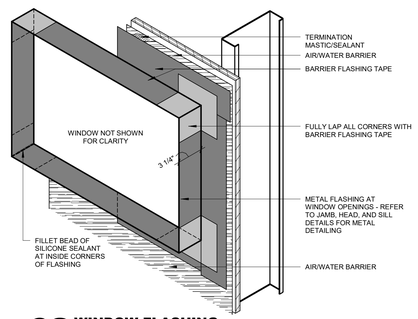

WINDOW FLASHING

02 3" = 1'-0"

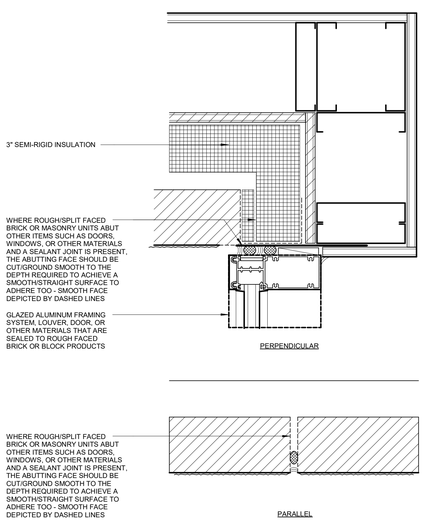

ROUGH FACED MASONRY DETAIL AT OPENINGS, JOINTS, AND DISSIMILAR MATERIALS

09 3" = 1'-0"

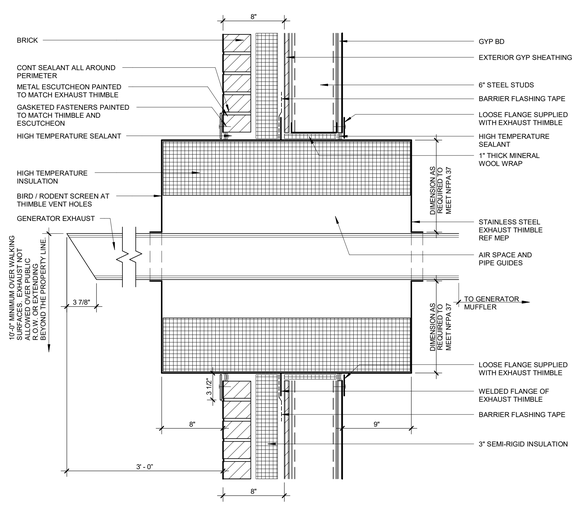

THRU-WALL GENERATOR EXHAUST DETAIL

05 1 1/2" = 1'-0"

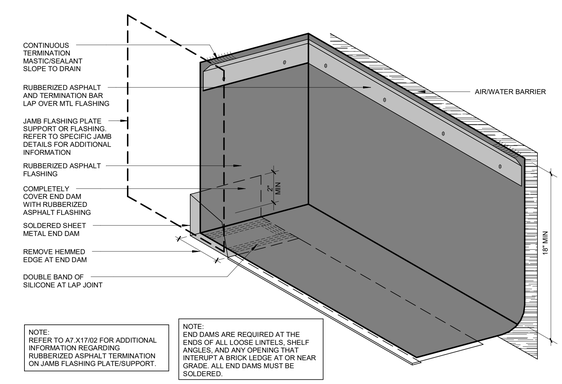

NOTE:
REFER TO A7.X17.02 FOR ADDITIONAL INFORMATION REGARDING RUBBERIZED ASPHALT TERMINATION ON JAMB FLASHING PLATE/SUPPORT.

NOTE:
END DAMS ARE REQUIRED AT THE ENDS OF ALL LOOSE LINTELS, SHELF ANGLES, AND ANY OPENING THAT INTERUPT A BRICK LEDGE AT OR NEAR GRADE. ALL END DAMS MUST BE SOLDERED.

END DAM FLASHING AT BRICK PERPENDICULAR TO OPENINGS

01 3" = 1'-0"

© 2026 HKS, INC.

HKS

ARCHITECT
HKS ARCHITECTS, INC.
90 SOUTH 400 WEST, #110
SALT LAKE CITY, UTAH 84101

CIVIL ENGINEER
GREAT BASIN ENGINEERING, INC
5746 SOUTH 1475 EAST
OGDEN, UTAH 84403

LANDSCAPE ARCHITECT
MGB+A STUDIO
145 WEST 200 SOUTH
SALT LAKE CITY, UTAH 84101

STRUCTURAL ENGINEER
REAVELEY ENGINEERS
250 EAST 200 SOUTH, SUITE 1000
SALT LAKE CITY, UTAH 84111

M/P/FP ENGINEER
RESOLUT GROUP
181 EAST 5600 SOUTH, SUITE 200
MURRAY, UTAH 84107

E/T ENGINEER
LYNK ENGINEERS
324 SOUTH STATE STREET, SUITE 400
SALT LAKE CITY, UTAH 84111

Intermountain Health

UTAH VALLEY SPORTS PERFORMANCE CENTER

PROJECT ADDRESS: WEST 880 NORTH 200 WEST PROVO, UTAH 84604

SEAL & SIGNATURE

KEY PLAN

REVISION

NO.	DESCRIPTION	DATE

HKS PROJECT NUMBER
27487.000

DATE
08/26/2026

ISSUE
DESIGN DEVELOPMENT

SHEET TITLE
BRICK DETAILS

SHEET NO.
A7.23

TITLE BLOCK VERSION: 20251630
PRINT DATE: 8/26/2026 1:36:10 PM TEMPLATE VERSION: 23.0.6 MODEL: Autodesk Docs://27487.000_R1 - UV Sports Performance Center_2025.rvt

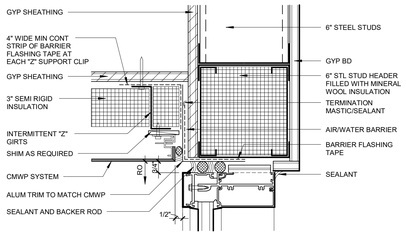

24 METAL PANEL SOFFIT AT WINDOW WALL
3" = 1'-0"

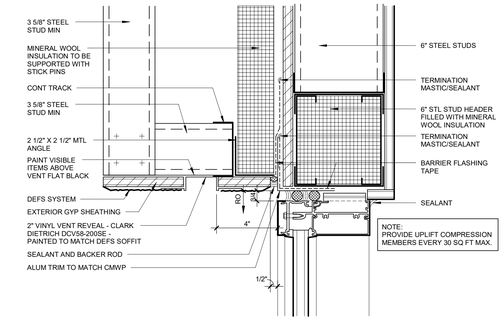

18 VENTED DEFS SOFFIT AT WINDOW WALL
3" = 1'-0"

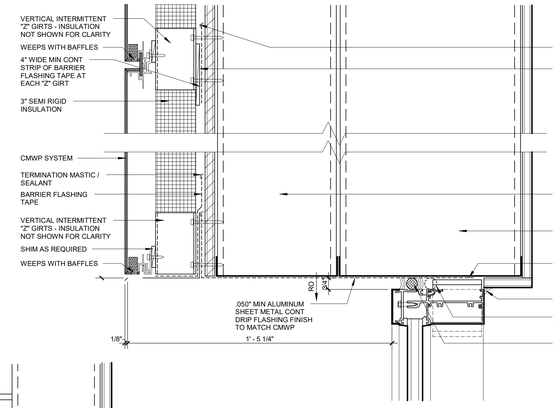

08 WINDOW HEAD AT DOUBLE STUD OVERHANG
3" = 1'-0"

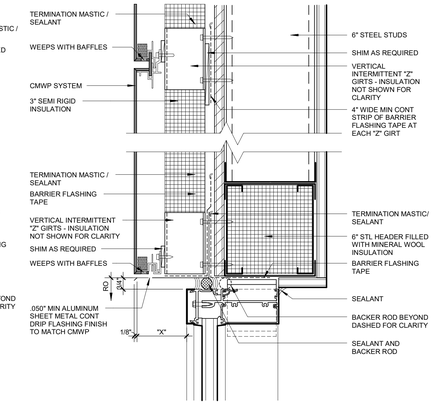

03 WINDOW HEAD
3" = 1'-0"

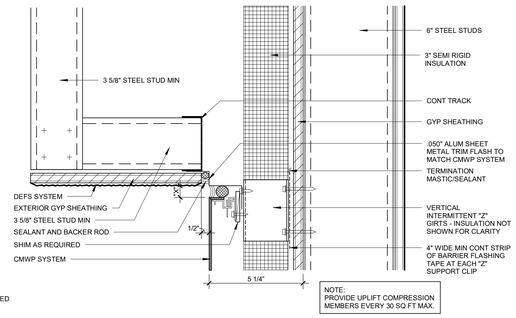

17 DEFS SOFFIT AT INSIDE CORNER
3" = 1'-0"

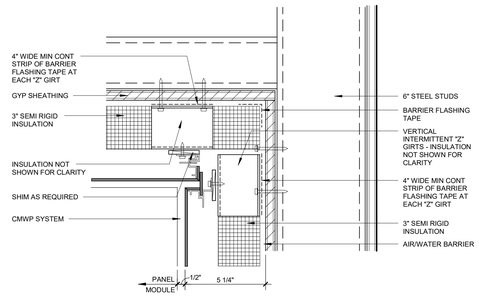

13 SOFFIT TO WALL TRANSITION
3" = 1'-0"

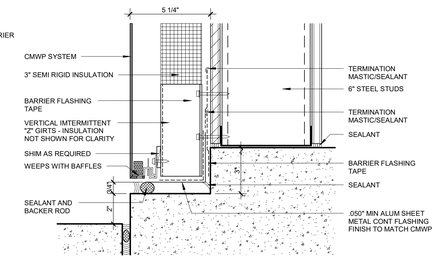

07 FOUNDATION DETAIL
3" = 1'-0"

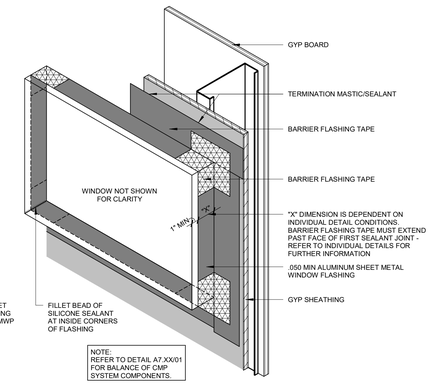

02 WINDOW FLASHING
3" = 1'-0"

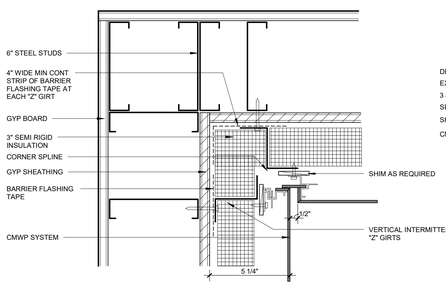

22 PLAN INSIDE CORNER
3" = 1'-0"

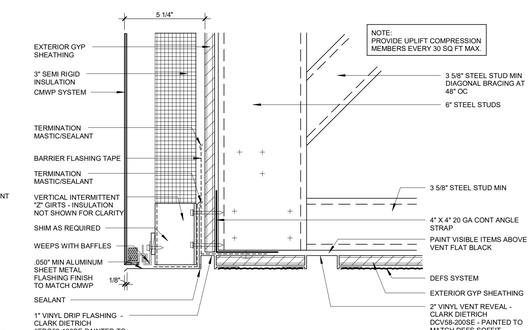

16 VENTED DEFS SOFFIT
3" = 1'-0"

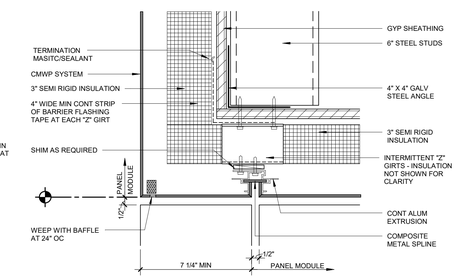

12 SOFFIT - FRONT BENT PANEL
3" = 1'-0"

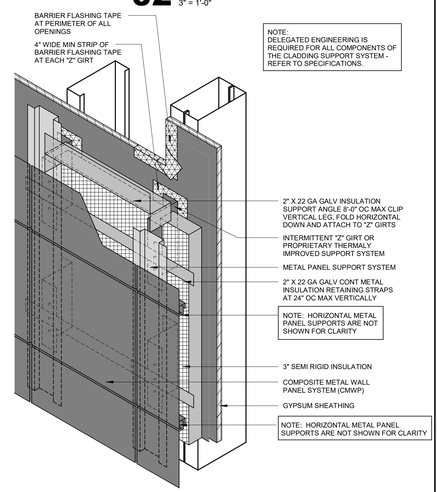

01 COMPOSITE METAL WALL PANEL SYSTEM
NTS

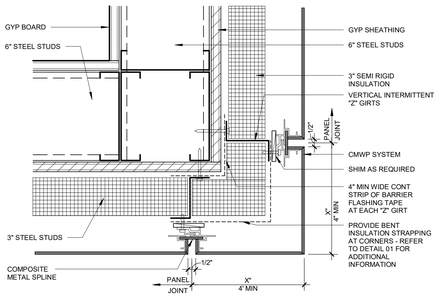

21 PLAN OUTSIDE CORNER
3" = 1'-0"

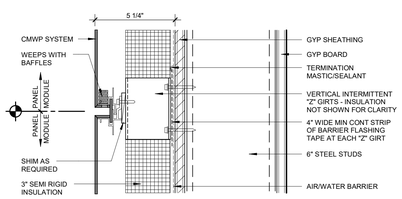

20 HORIZONTAL JOINT
3" = 1'-0"

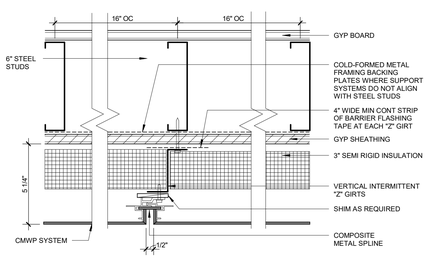

19 VERTICAL JOINT
3" = 1'-0"

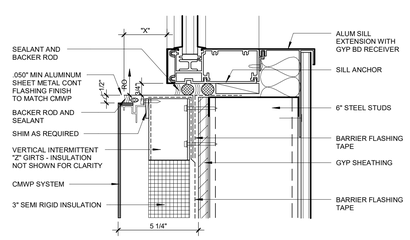

09 WINDOW SILL
3" = 1'-0"

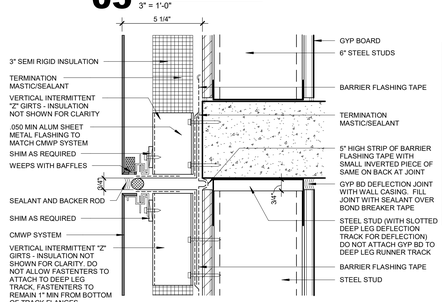

05 WINDOW JAMB
3" = 1'-0"

04 DEFLECTION JOINT
3" = 1'-0"

COMPOSITE METAL WALL PANEL SYSTEM (CMWP)

THE COMPOSITE METAL WALL PANEL SYSTEM IS DESIGNED AS AN INTEGRATED SYSTEM REQUIRING COORDINATION OF INSTALLATION AND INTERFACE OF SYSTEM COMPONENTS. THE SYSTEM FUNCTIONS AS A RAIN-SCREEN TO PROTECT FROM UNCONTROLLED AIR OR WATER INFILTRATION.

THE CMWP WALL ASSEMBLY IS DESIGNED AS AN INTEGRATED SYSTEM REQUIRING COORDINATION BY THE CONTRACTOR OF THE INSTALLATION AND INTERFACE OF INTERNAL SYSTEM COMPONENTS AND ADJACENT SYSTEMS. THE SYSTEM MUST ACCOMMODATE WATER PENETRATION OF THE CMWP AND PROVIDE AN UNOBSTRUCTED PATH FOR WEEPING WATER TO THE EXTERIOR. WATER WHICH DOES PENETRATE THE CMWP MUST NOT PENETRATE THE AIR/WATER BARRIER AND ASSOCIATED FLASHING AND MUST BE WEEPED TO THE EXTERIOR WHEN INTERSECTING FLASHING AT DOORS, WINDOWS, ROOFS, AND ASSEMBLY PERIMETER. THE INTEGRITY OF THE AIR/WATER BARRIER AND ASSOCIATED FLASHING MUST BE MAINTAINED TO PREVENT PENETRATING WATER FROM MIGRATING ANYWHERE OTHER THAN TO THE EXTERIOR.

THE COMPOSITE METAL WALL PANEL SYSTEM IS MADE UP OF, BUT NOT LIMITED TO THE FOLLOWING:
- SUBSTRATE
- AIR/WATER BARRIER
- BARRIER FLASHING TAPE AND SEALING TAPE
- METAL PANEL SUPPORT SYSTEM
- SEMI RIGID INSULATION
- COMPOSITE METAL WALL PANEL

GENERAL NOTES

BASIS OF DESIGN FOR GLAZED ALUMINUM FRAMING SYSTEM IS KAWNEER 2250IG WITH HEAD DETAIL THAT INCLUDES AN OPTIONAL PRESSURE PLATE. INTENT IS TO PROVIDE A WINDOW SYSTEM THAT ACCOMMODATES THE DOUBLE SEALANT APPROACH AS SHOWN IN THE DETAILS.

© 2026 HKS, INC.

HKS

ARCHITECT
HKS ARCHITECTS, INC.
90 SOUTH 400 WEST, #110
SALT LAKE CITY, UTAH 84101

CIVIL ENGINEER
GREAT BASIN ENGINEERING, INC
5746 SOUTH 1475 EAST
OGDEN, UTAH 84403

LANDSCAPE ARCHITECT
MGB+A STUDIO
145 WEST 200 SOUTH
SALT LAKE CITY, UTAH 84101

STRUCTURAL ENGINEER
REAVELEY ENGINEERS
250 EAST 200 SOUTH, SUITE 1000
SALT LAKE CITY, UTAH 84111

M/P/FP ENGINEER
RESOLUT GROUP
181 EAST 5600 SOUTH, SUITE 200
MURRAY, UTAH 84107

E/T ENGINEER
LYNK ENGINEERS
324 SOUTH STATE STREET, STUDIO 400
SALT LAKE CITY, UTAH 84111

Intermountain Health

UTAH VALLEY SPORTS PERFORMANCE CENTER

PROJECT ADDRESS: WEST 880 NORTH 200 WEST PROVO, UTAH 84604

SEAL & SIGNATURE

KEY PLAN

REVISION

NO.	DESCRIPTION	DATE

HKS PROJECT NUMBER
27487.000

DATE
08/26/2026

ISSUE
DESIGN DEVELOPMENT

SHEET TITLE
METAL PANEL DETAILS

SHEET NO.
A7.31

TITLE BLOCK VERSION: 20210930
MODEL: Autodesk Docs://27487.000_IH-UV Sports Performance Center 2025/A_IH-UV_Sports Performance Center_2025.rvt
PRINT DATE: 8/26/2026 1:38:13 PM TEMPLATE VERSION: 23.0.6

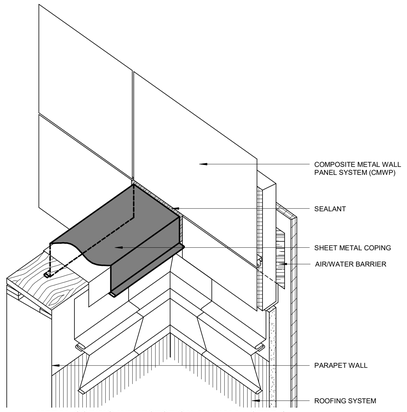

METAL COPING INTERSECTION AT WALL - STEP 4
NTS

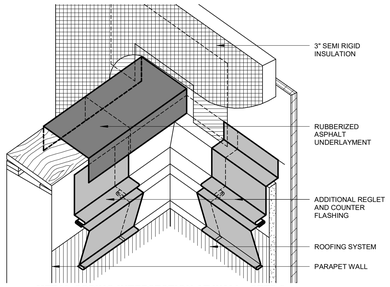

METAL COPING INTERSECTION AT WALL - STEP 3
NTS

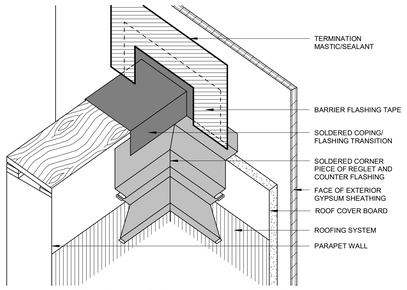

METAL COPING INTERSECTION AT WALL - STEP 2
NTS

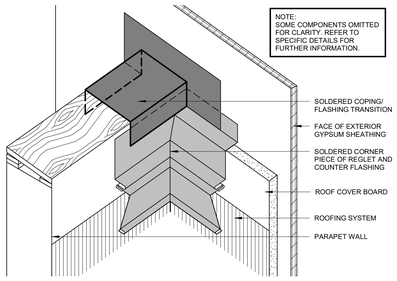

09 METAL COPING INTERSECTION AT WALL - STEP 1
1 1/2" = 1'-0"

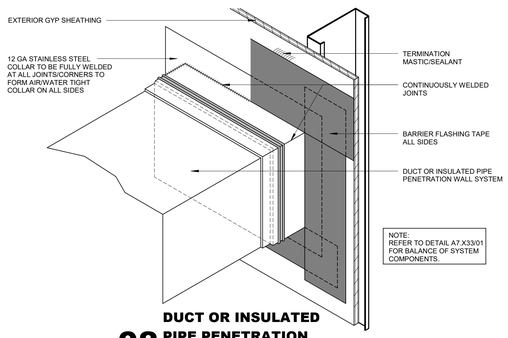

08 DUCT OR INSULATED PIPE PENETRATION
3" = 1'-0"

METAL PANEL PARAPET AND COPING AT SINGLE PLY ROOF AT DOUBLE STUD CONDITION FOR THICKENED OVERHANG

10 COPING DETAIL - SINGLE-PLY ROOFING AT DOUBLE STUD PARAPET FOR THICKENED OVERHANG
1 1/2" = 1'-0"

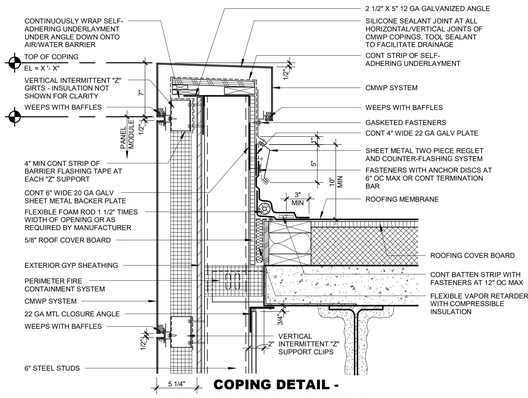

07 COPING DETAIL - SINGLE-PLY ROOFING
1 1/2" = 1'-0"

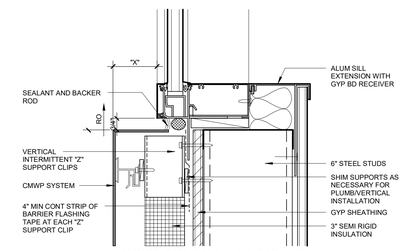

03 WINDOW SILL - FLANGED
3" = 1'-0"

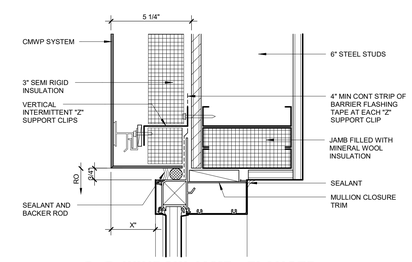

02 WINDOW JAMB - FLANGED
3" = 1'-0"

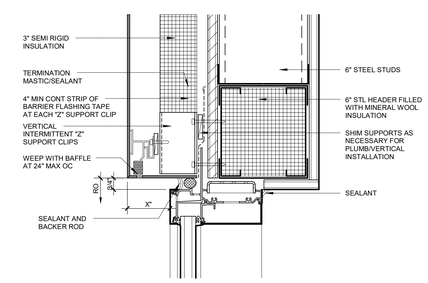

01 WINDOW HEAD - FLANGED
3" = 1'-0"

© 2026 HKS, INC.

HKS

ARCHITECT
HKS ARCHITECTS, INC.
90 SOUTH 400 WEST, #110
SALT LAKE CITY, UTAH 84101

CIVIL ENGINEER
GREAT BASIN ENGINEERING, INC
5746 SOUTH 1475 EAST
OGDEN, UTAH 84403

LANDSCAPE ARCHITECT
MGB+A STUDIO
145 WEST 200 SOUTH
SALT LAKE CITY, UTAH 84101

STRUCTURAL ENGINEER
REAVELEY ENGINEERS
250 EAST 200 SOUTH, SUITE 1000
SALT LAKE CITY, UTAH 84111

M/P/FP ENGINEER
RESOLUT GROUP
181 EAST 5600 SOUTH, SUITE 200
MURRAY, UTAH 84107

E/T ENGINEER
LYNK ENGINEERS
324 SOUTH STATE STREET, SUITE 400
SALT LAKE CITY, UTAH 84111

Intermountain Health

UTAH VALLEY SPORTS PERFORMANCE CENTER

PROJECT ADDRESS: WEST 880 NORTH 200 WEST PROVO, UTAH 84604

SEAL & SIGNATURE

KEY PLAN

REVISION

NO.	DESCRIPTION	DATE

HKS PROJECT NUMBER
27487.000

DATE
08/26/2026

ISSUE
DESIGN DEVELOPMENT

SHEET TITLE
METAL PANEL DETAILS

SHEET NO.
A7.32

TITLE BLOCK VERSION: 20251630
MODEL: Autodesk Docs://27487.000_IH_UV Sports Performance Center_2025/A_IH-UV_Sports-Performance-Center_2025.rvt
PRINT DATE: 8/26/2026 1:36:14 PM TEMPLATE VERSION: 23.0.6

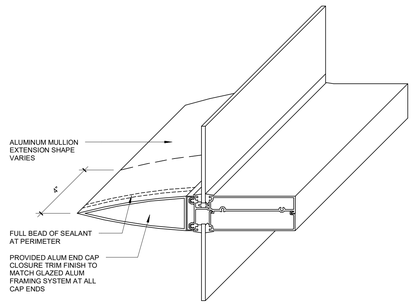

05 MULLION EXTENSION END CAP DETAIL
3" = 1'-0"

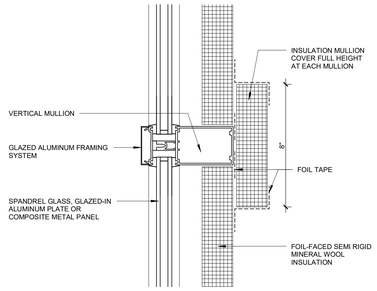

04 INSULATION MULLION COVER AT GLAZED ALUMINUM FRAMING SYSTEM
3" = 1'-0"

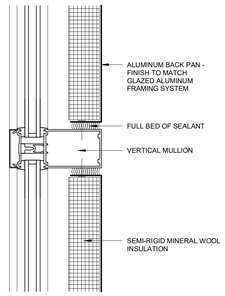

03 BACK PAN DETAIL AT GLAZED ALUMINUM FRAMING SYSTEM
3" = 1'-0"

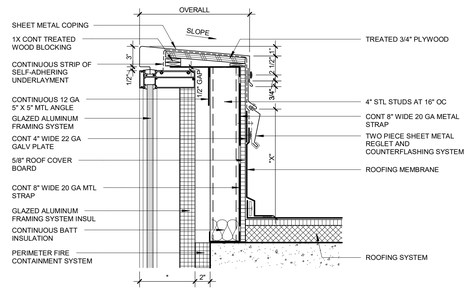

01 GLAZED ALUMINUM FRAMING SYSTEM PARAPET
1 1/2" = 1'-0"

© 2026 HKS, INC.

HKS

ARCHITECT
HKS ARCHITECTS, INC.
90 SOUTH 400 WEST, #110
SALT LAKE CITY, UTAH 84101

CIVIL ENGINEER
GREAT BASIN ENGINEERING, INC
5746 SOUTH 1475 EAST
OGDEN, UTAH 84403

LANDSCAPE ARCHITECT
MGB+A STUDIO
145 WEST 200 SOUTH
SALT LAKE CITY, UTAH 84101

STRUCTURAL ENGINEER
REAVELEY ENGINEERS
250 EAST 200 SOUTH, SUITE 1000
SALT LAKE CITY, UTAH 84111

M/P/FP ENGINEER
RESOLUT GROUP
181 EAST 5600 SOUTH, SUITE 200
MURRAY, UTAH 84107

E/T ENGINEER
LYNK ENGINEERS
324 SOUTH STATE STREET, SUITE 400
SALT LAKE CITY, UTAH 84111

Intermountain Health

UTAH VALLEY SPORTS PERFORMANCE CENTER

PROJECT ADDRESS: WEST 880 NORTH 200 WEST PROVO, UTAH 84604

SEAL & SIGNATURE

KEY PLAN

REVISION

NO.	DESCRIPTION	DATE

HKS PROJECT NUMBER
27487.000

DATE
08/26/2026

ISSUE
DESIGN DEVELOPMENT

SHEET TITLE
PARAPET DETAILS

SHEET NO.
A7.51

TITLE BLOCK VERSION: 20251630
PRINT DATE: 8/26/2026 1:36:18 PM TEMPLATE VERSION: 23.0.6 MODEL: Autodesk Docs://27487.000_IH - UV Sports Performance Center 2025/A_IH-UV Sports Performance Center 2025.rvt

TITLE BLOCK VERSION: 20251630

PRINT DATE: 8/26/2026 1:36:17 PM TEMPLATE VERSION: 23.0.6 MODEL: Autodesk Docs://27487.000_IH - UV Sports Performance Center 2025/A_IH-UV Sports Performance Center_2025.rvt

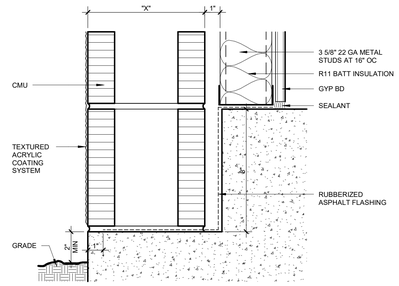

02 LEDGE AT FOUNDATION WALL - LEDGE ABOVE ADJACENT GRADE
3" = 1'-0"

GENERAL NOTES

1. THE DETAILS ON THIS SHEET ARE INTENDED TO ANNOTATE TYPICAL CONSTRUCTION COMPONENTS AND APPLY TO SIMILAR AREAS THROUGHOUT THE PROJECT UNO.
2. MASONRY UNIT EXPANSION JOINTS (EJ) AND CONTROL JOINTS (CJ) TO BE PLACED AT:
   1. 3/8" (10mm) WIDE CONTROL JOINTS AS INDICATED BUT DO NOT EXCEED 25FT (7.62m) ON CENTERS.

BASIS OF DESIGN FOR GLAZED ALUMINUM FRAMING SYSTEM IS KAWNEER 2250/G WITH HEAD DETAIL THAT INCLUDES AN OPTIONAL PRESSURE PLATE. INTENT IS TO PROVIDE A WINDOW SYSTEM THAT ACCOMMODATES THE DOUBLE SEALANT APPROACH AS SHOWN IN THE DETAILS.

© 2026 HKS, INC.

HKS

ARCHITECT
HKS ARCHITECTS, INC.
90 SOUTH 400 WEST, #110
SALT LAKE CITY, UTAH 84101

CIVIL ENGINEER
GREAT BASIN ENGINEERING, INC
5746 SOUTH 1475 EAST
OGDEN, UTAH 84403

LANDSCAPE ARCHITECT
MGB+A STUDIO
145 WEST 200 SOUTH
SALT LAKE CITY, UTAH 84101

STRUCTURAL ENGINEER
REAVELEY ENGINEERS
250 EAST 200 SOUTH, SUITE 1000
SALT LAKE CITY, UTAH 84111

M/P/FP ENGINEER
RESOLUT GROUP
181 EAST 5600 SOUTH, SUITE 200
MURRAY, UTAH 84107

E/T ENGINEER
LYNK ENGINEERS
324 SOUTH STATE STREET, SUITE 400
SALT LAKE CITY, UTAH 84111

Intermountain Health

UTAH VALLEY SPORTS PERFORMANCE CENTER

PROJECT ADDRESS: WEST 880 NORTH 200 WEST PROVO, UTAH 84604

SEAL & SIGNATURE

KEY PLAN

REVISION

NO.	DESCRIPTION	DATE

HKS PROJECT NUMBER
27487.000

DATE
08/26/2026

ISSUE
DESIGN DEVELOPMENT

SHEET TITLE
CMU DETAILS

SHEET NO.
A7.61

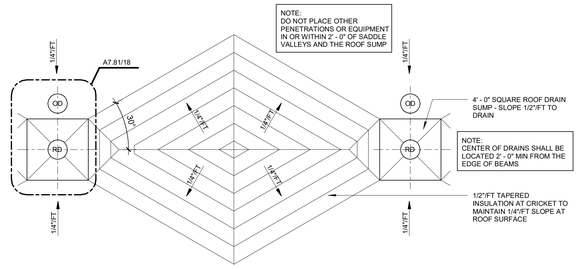

16 TYPICAL SADDLE GEOMETRY PLAN
1/4" = 1'-0"

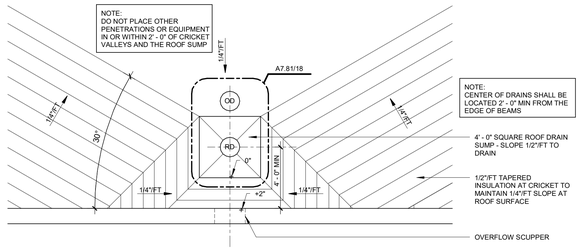

TYPICAL CRICKET ADJACENT TO PARAPET WITH ROOF DRAINS
15
1/4" = 1'-0"

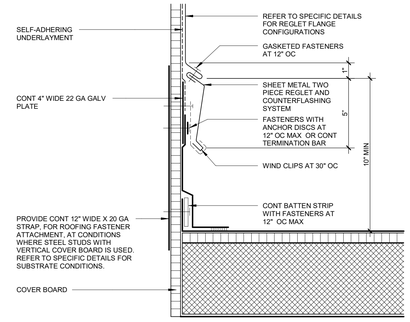

11 REGLET AND COUNTERFLASHING
3" = 1'-0"

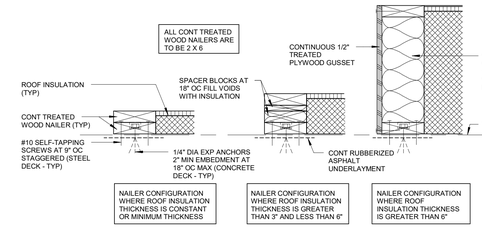

TREATED WOOD NAILER CONFIGURATIONS
06
1 1/2" = 1'-0"

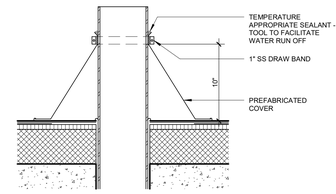

05 VENT PIPE PENETRATION
1 1/2" = 1'-0"

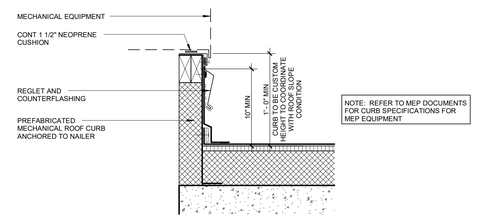

04 EQUIPMENT CURB
1 1/2" = 1'-0"

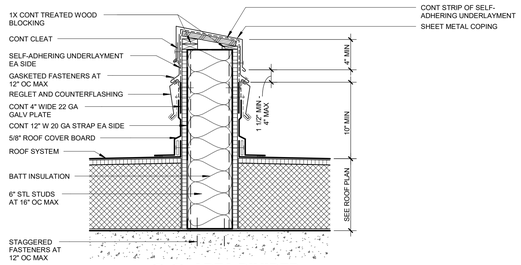

09 AREA DIVIDER
1 1/2" = 1'-0"

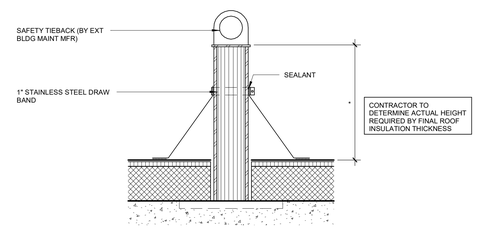

03 SAFETY TIEBACK
1 1/2" = 1'-0"

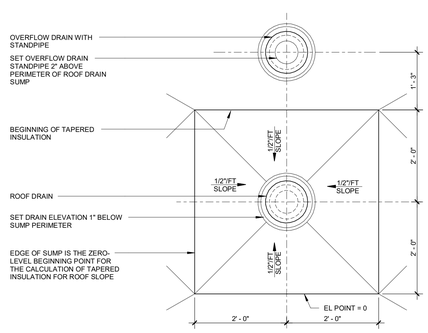

ROOF DRAIN SUMP WITH ADJACENT OVERFLOW DRAIN
18
3/4" = 1'-0"

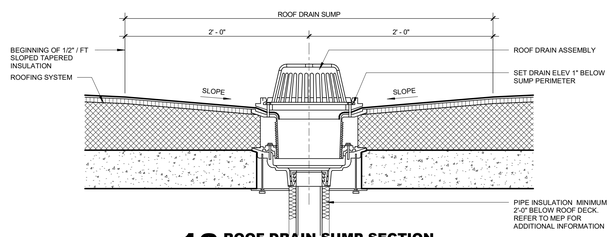

13 ROOF DRAIN SUMP SECTION
1 1/2" = 1'-0"

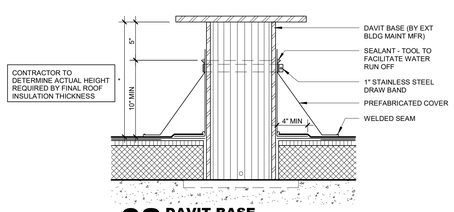

02 DAVIT BASE
1 1/2" = 1'-0"

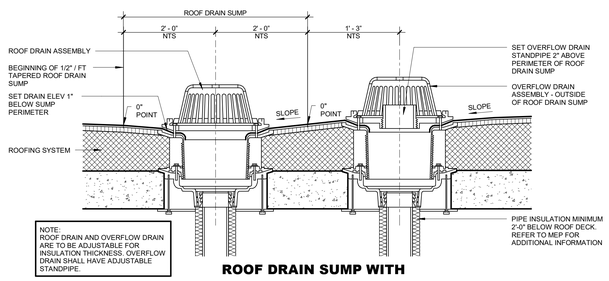

ROOF DRAIN SUMP WITH ADJACENT OVERFLOW DRAIN
17
1 1/2" = 1'-0"

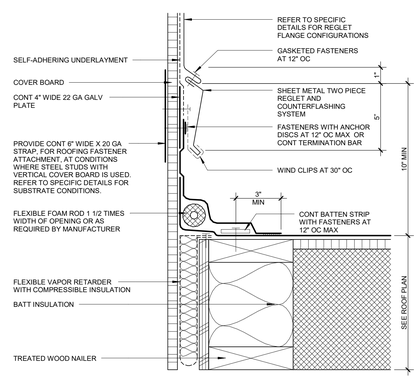

12 REGLET AND COUNTERFLASHING
3" = 1'-0"

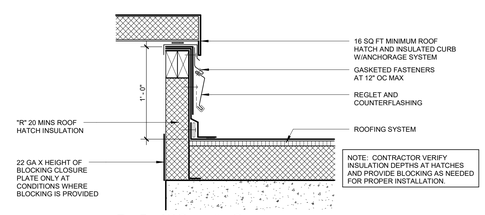

01 ROOF HATCH
1 1/2" = 1'-0"

© 2026 HKS, INC.

HKS

ARCHITECT
HKS ARCHITECTS, INC.
90 SOUTH 400 WEST, #110
SALT LAKE CITY, UTAH 84101

CIVIL ENGINEER
GREAT BASIN ENGINEERING, INC
5746 SOUTH 1475 EAST
OGDEN, UTAH 84403

LANDSCAPE ARCHITECT
MGB+A STUDIO
145 WEST 200 SOUTH
SALT LAKE CITY, UTAH 84101

STRUCTURAL ENGINEER
REAVELEY ENGINEERS
250 EAST 200 SOUTH, SUITE 1000
SALT LAKE CITY, UTAH 84111

M/P/FP ENGINEER
RESOLUT GROUP
181 EAST 5600 SOUTH, SUITE 200
MURRAY, UTAH 84107

E/T ENGINEER
LYNK ENGINEERS
324 SOUTH STATE STREET, SUITE 400
SALT LAKE CITY, UTAH 84111

Intermountain Health

UTAH VALLEY SPORTS PERFORMANCE CENTER

PROJECT ADDRESS: WEST 880 NORTH 200 WEST PROVO, UTAH 84604

SEAL & SIGNATURE

KEY PLAN

REVISION

NO.	DESCRIPTION	DATE

HKS PROJECT NUMBER
27487.000

DATE
08/26/2026

ISSUE
DESIGN DEVELOPMENT

SHEET TITLE
SINGLE PLY ROOFING DETAILS 01

SHEET NO.
A7.81

TITLE BLOCK VERSION: 20251630
MODEL: Autodesk Docs://27487.000_IH_UV Sports Performance Center_2025/A_IH-UV Sports Performance Center_2025.rvt
PRINT DATE: 8/26/2026 1:08:20 PM TEMPLATE VERSION: 23.0.6

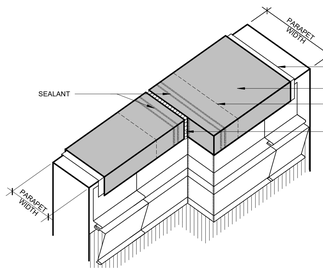

COPING CAP TRANSITIONS
THICKNESS INCREASE IN WALL - STEP 5

NTS

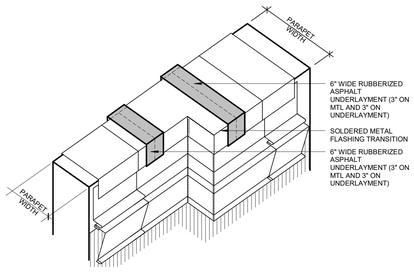

COPING CAP TRANSITIONS
THICKNESS INCREASE IN WALL - STEP 4

NTS

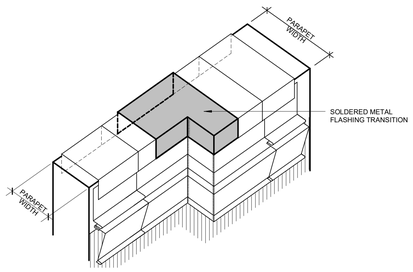

COPING CAP TRANSITIONS
THICKNESS INCREASE IN WALL - STEP 3

NTS

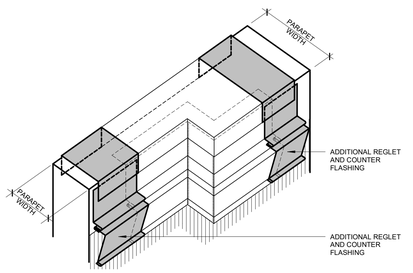

COPING CAP TRANSITIONS
THICKNESS INCREASE IN WALL - STEP 2

NTS

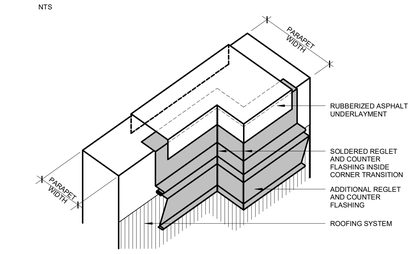

COPING CAP TRANSITIONS
15 THICKNESS INCREASE IN WALL - STEP 1
NTS

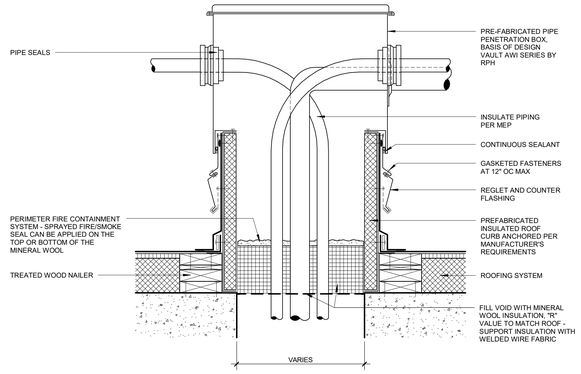

MULTIPLE PIPE /
13 CONDUIT PENETRATION BOX
1 1/2" = 1'-0"

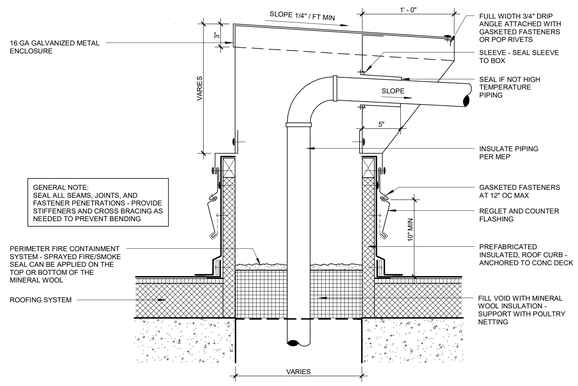

MULTIPLE PIPE /
12 CONDUIT PENETRATION BOX
1 1/2" = 1'-0"

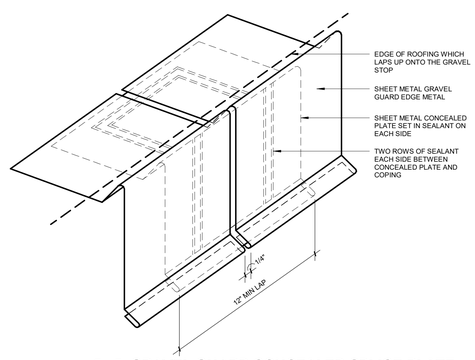

11 GRAVEL GUARD CONCEALED SPLICE PLATE
3" = 1'-0"

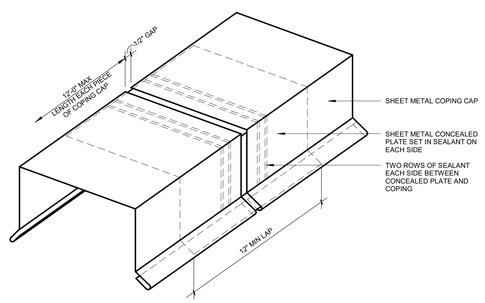

10 COPING CAP CONCEALED SPICE PLATE
3" = 1'-0"

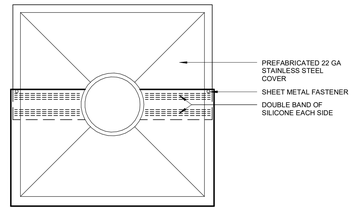

08 ROOF PENETRATION COVER PLAN
1 1/2" = 1'-0"

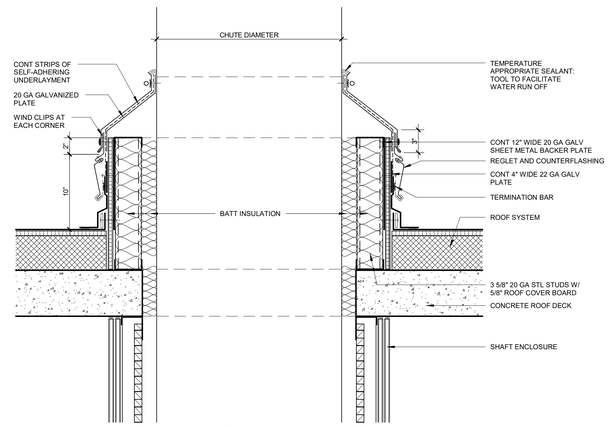

07 CHUTE DETAIL
1 1/2" = 1'-0"

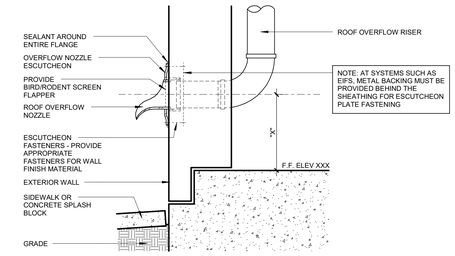

05 ROOF OVERFLOW OUTLET NOZZLE
1 1/2" = 1'-0"

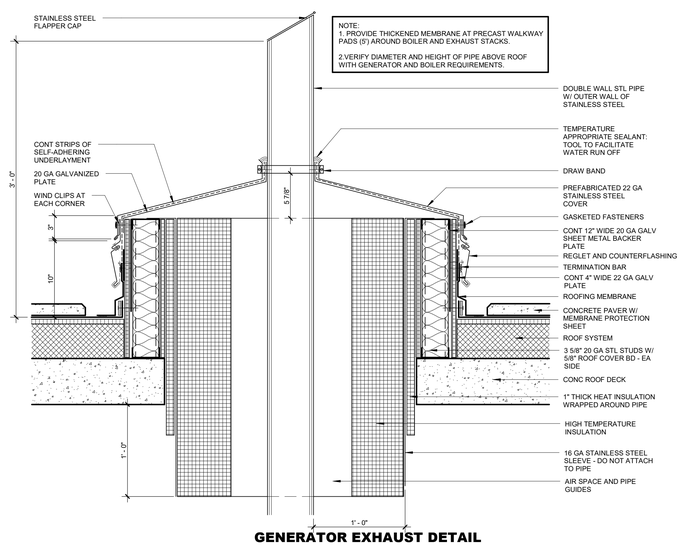

GENERATOR EXHAUST DETAIL
06 (BOILER EXHAUST SIM)
1 1/2" = 1'-0"

HKS

ARCHITECT
HKS ARCHITECTS, INC.
90 SOUTH 400 WEST, #110
SALT LAKE CITY, UTAH 84101

CIVIL ENGINEER
GREAT BASIN ENGINEERING, INC
5746 SOUTH 1475 EAST
OGDEN, UTAH 84403

LANDSCAPE ARCHITECT
MGB+A STUDIO
145 WEST 200 SOUTH
SALT LAKE CITY, UTAH 84101

STRUCTURAL ENGINEER
REAVELEY ENGINEERS
250 EAST 200 SOUTH, SUITE 1000
SALT LAKE CITY, UTAH 84111

M/P/FP ENGINEER
RESOLUT GROUP
181 EAST 5600 SOUTH, SUITE 200
MURRAY, UTAH 84107

E/T ENGINEER
LYNK ENGINEERS
324 SOUTH STATE STREET, SUITE 400
SALT LAKE CITY, UTAH 84111

Intermountain Health

UTAH VALLEY SPORTS PERFORMANCE CENTER

PROJECT ADDRESS: WEST 880 NORTH 200 WEST PROVO, UTAH 84604

SEAL & SIGNATURE

KEY PLAN

REVISION

NO.	DESCRIPTION	DATE

HKS PROJECT NUMBER
27487.000

DATE
08/26/2026

ISSUE
DESIGN DEVELOPMENT

SHEET TITLE
SINGLE PLY ROOFING DETAILS 02

SHEET NO.
A7.82

© 2026 HKS, INC.

TITLE BLOCK VERSION: 20251630
MODEL: Autodesk Docs://27487.000_IH - UV Sports Performance Center_2025/A_IH-UV_Sports-Performance-Center_2025.rvt
PRINT DATE: 8/26/2026 1:38:22 PM TEMPLATE VERSION: 23.0.6

TITLE BLOCK VERSION: 20210930

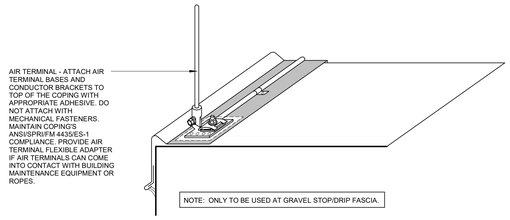

03 LIGHTNING PROTECTION AIR TERMINAL SUPPORT DETAIL AT GRAVEL STOP
3" = 1'-0"

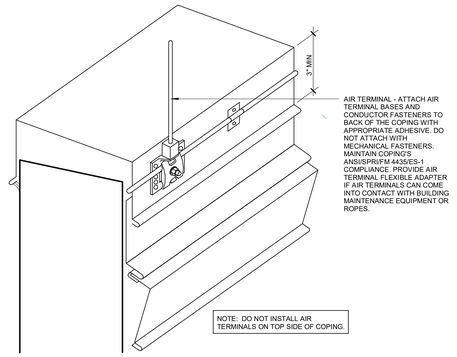

02 LIGHTNING PROTECTION AIR TERMINAL SUPPORT DETAIL AT PARAPET
3" = 1'-0"

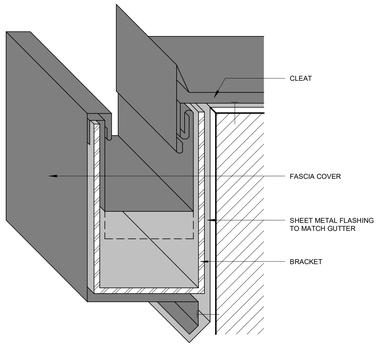

01 EDGE HANGING GUTTER
3" = 1'-0"

© 2026 HKS, INC.

HKS

ARCHITECT
HKS ARCHITECTS, INC.
90 SOUTH 400 WEST, #110
SALT LAKE CITY, UTAH 84101

CIVIL ENGINEER
GREAT BASIN ENGINEERING, INC
5746 SOUTH 1475 EAST
OGDEN, UTAH 84403

LANDSCAPE ARCHITECT
MGB+A STUDIO
145 WEST 200 SOUTH
SALT LAKE CITY, UTAH 84101

STRUCTURAL ENGINEER
REAVELEY ENGINEERS
250 EAST 200 SOUTH, SUITE 1000
SALT LAKE CITY, UTAH 84111

M/P/FP ENGINEER
RESOLUT GROUP
181 EAST 5600 SOUTH, SUITE 200
MURRAY, UTAH 84107

E/T ENGINEER
LYNK ENGINEERS
324 SOUTH STATE STREET, SUITE 400
SALT LAKE CITY, UTAH 84111

Intermountain Health

UTAH VALLEY SPORTS PERFORMANCE CENTER

PROJECT ADDRESS: WEST 880 NORTH 200 WEST PROVO, UTAH 84604

SEAL & SIGNATURE

KEY PLAN

REVISION

NO.	DESCRIPTION	DATE

HKS PROJECT NUMBER
27487.000

DATE
08/26/2026

ISSUE
DESIGN DEVELOPMENT

SHEET TITLE
SINGLE PLY ROOFING DETAILS 03

SHEET NO.
A7.83

PRINT DATE: 8/26/2026 1:38:23 PM TEMPLATE VERSION: 23.0.6 MODEL: Autodesk Docs://27487.000_IH - UV Sports Performance Center 2025/A_IHUV_Sports-Performance-Center_2025.rvt

TITLE BLOCK VERSION: 20251630

PRINT DATE: 8/26/2026 1:36:25 PM TEMPLATE VERSION: 23.0.6 MODEL: Autodesk Docs://27487.000_IH_UV Sports Performance Center_2025/A_IH-UV Sports Performance Center_2025.rvt

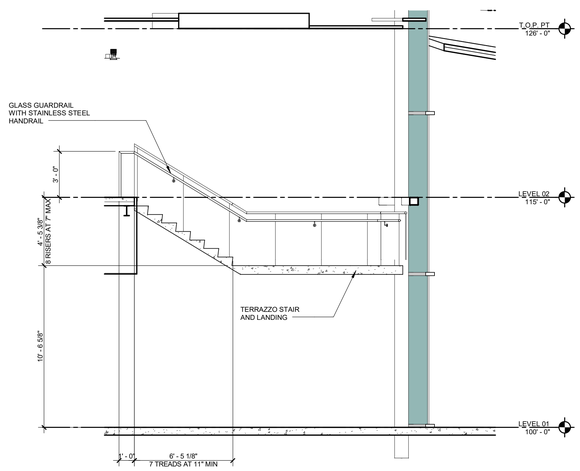

03 **SECTION AT LIVE WELL STAIR - UPPER**
1/4" = 1'-0"

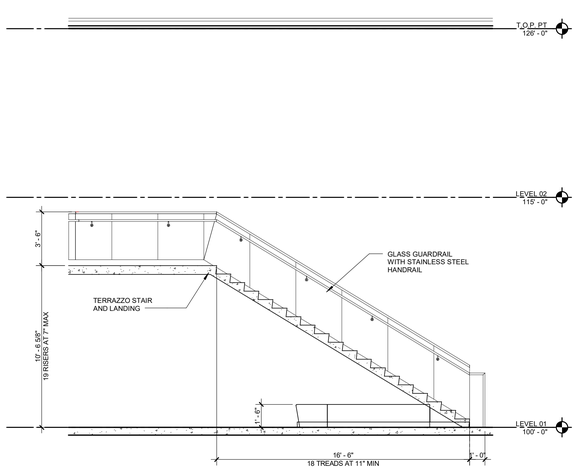

02 **SECTION AT LIVE WELL STAIR - LOWER**
1/4" = 1'-0"

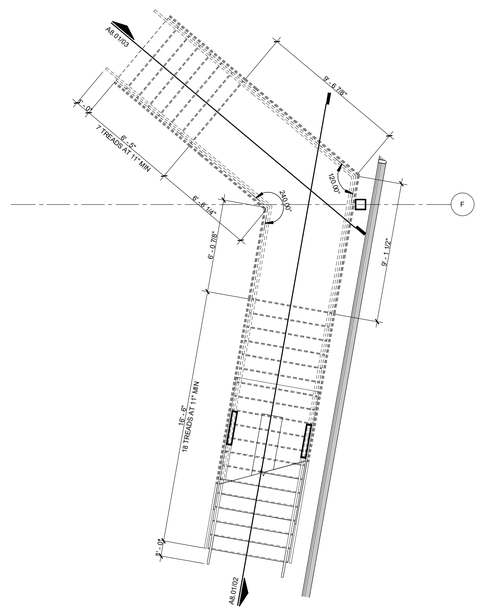

01 **ENLARGED FLOOR PLAN - LEVEL 01 - LIVE WELL**
1/4" = 1'-0"

HKS

ARCHITECT
HKS ARCHITECTS, INC.
90 SOUTH 400 WEST, #110
SALT LAKE CITY, UTAH 84101

CIVIL ENGINEER
GREAT BASIN ENGINEERING, INC
5746 SOUTH 1475 EAST
OGDEN, UTAH 84403

LANDSCAPE ARCHITECT
MGB+A STUDIO
145 WEST 200 SOUTH
SALT LAKE CITY, UTAH 84101

STRUCTURAL ENGINEER
REAVELEY ENGINEERS
250 EAST 200 SOUTH, SUITE 1000
SALT LAKE CITY, UTAH 84111

M/P/FP ENGINEER
RESOLUT GROUP
181 EAST 5600 SOUTH, SUITE 200
MURRAY, UTAH 84107

E/T ENGINEER
LYNK ENGINEERS
324 SOUTH STATE STREET, SUITE 400
SALT LAKE CITY, UTAH 84111

Intermountain Health

UTAH VALLEY SPORTS PERFORMANCE CENTER

PROJECT ADDRESS: WEST 880 NORTH 200 WEST PROVO, UTAH 84604

SEAL & SIGNATURE

KEY PLAN

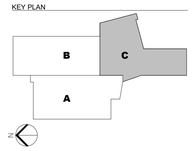

REVISION

NO.	DESCRIPTION	DATE

HKS PROJECT NUMBER
27487.000

DATE
08/26/2026

ISSUE
DESIGN DEVELOPMENT

SHEET TITLE
LIVE WELL STAIR PLAN, SECTION & DETAILS

SHEET NO.
A8.01

© 2026 HKS, INC.

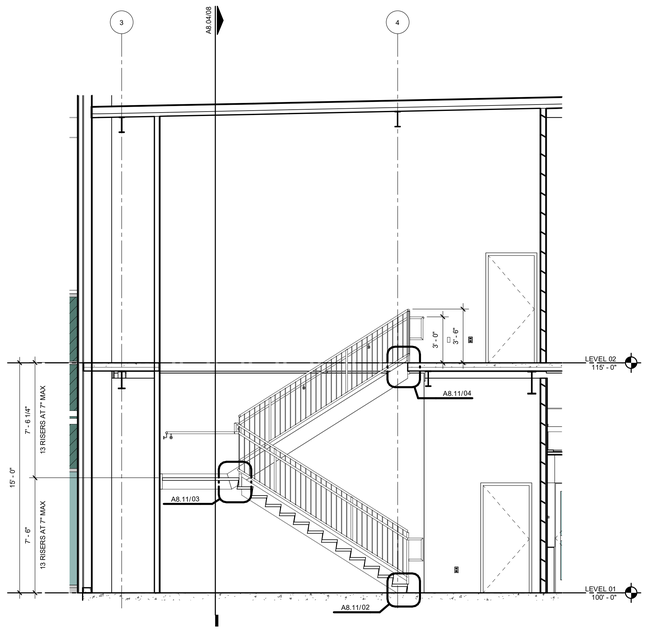

07 SECTION - NW STAIR
1/4" = 1'-0"

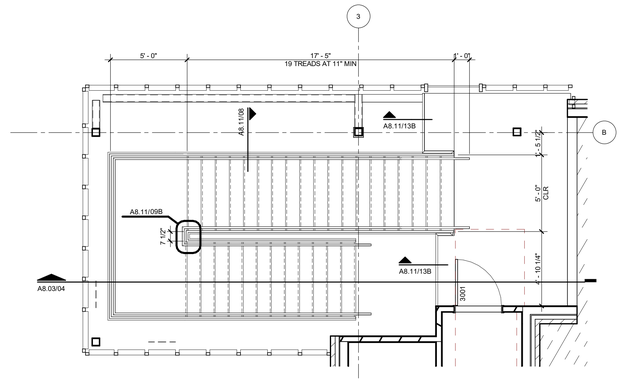

03 ENLARGED FLOOR PLAN - ROOF - NE STAIR
1/4" = 1'-0"

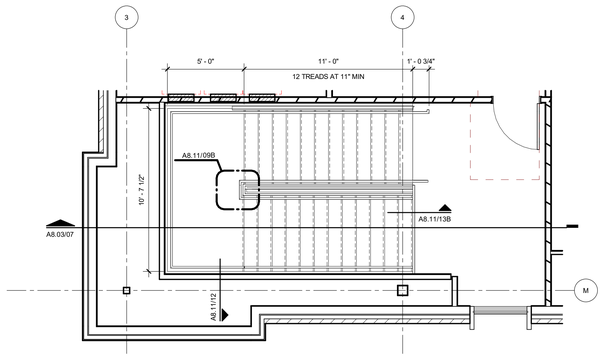

06 ENLARGED FLOOR PLAN - LEVEL 02 - NW STAIR
1/4" = 1'-0"

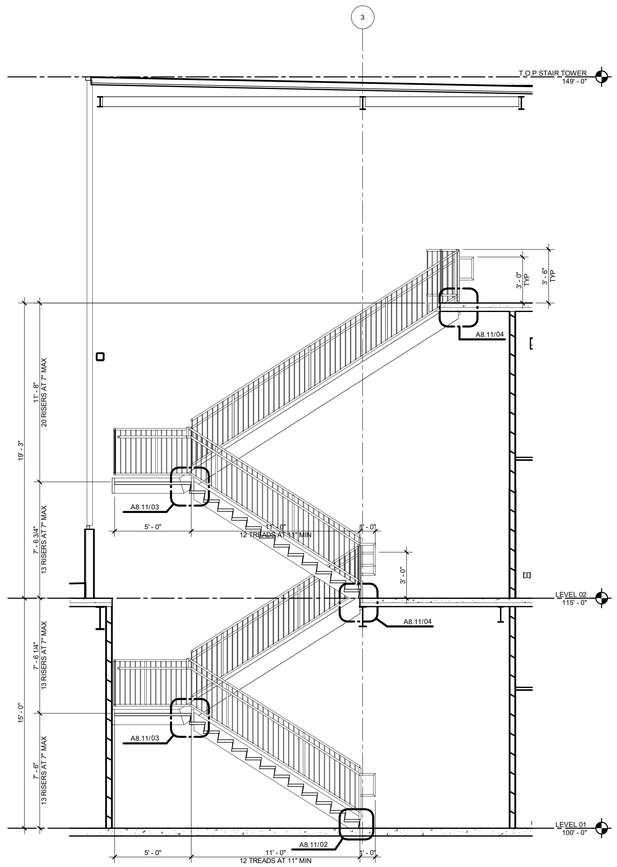

04 SECTION - NE STAIR
1/4" = 1'-0"

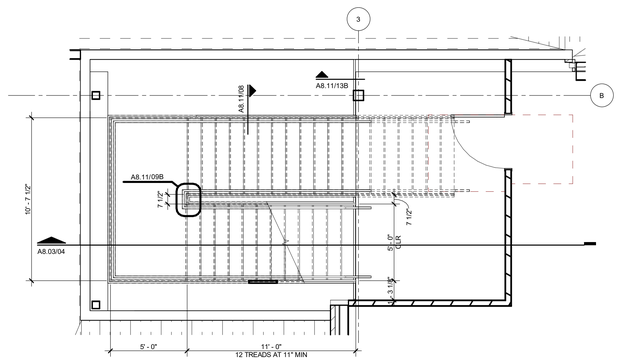

02 ENLARGED FLOOR PLAN - LEVEL 02 - NE STAIR
1/4" = 1'-0"

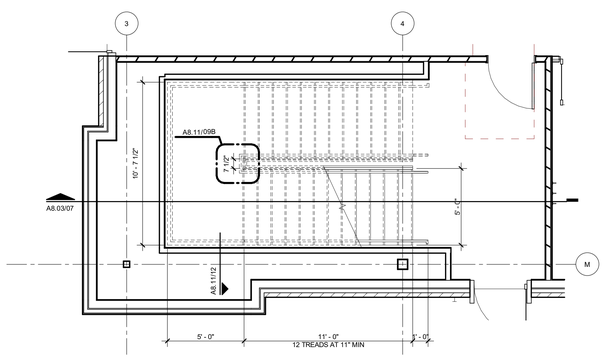

05 ENLARGED FLOOR PLAN - LEVEL 01 - NW STAIR
1/4" = 1'-0"

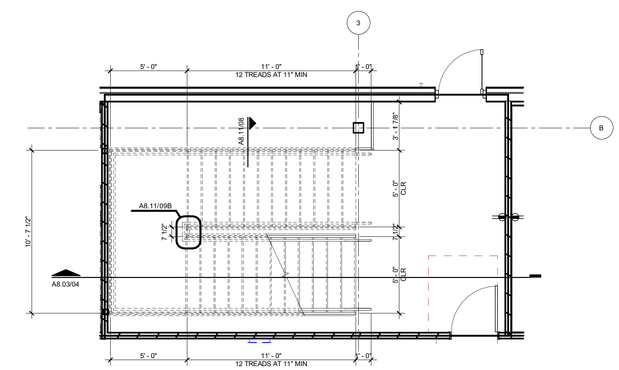

01 ENLARGED FLOOR PLAN - LEVEL 01 - NE STAIR
1/4" = 1'-0"

HKS

ARCHITECT
HKS ARCHITECTS, INC.
90 SOUTH 400 WEST, #110
SALT LAKE CITY, UTAH 84101

CIVIL ENGINEER
GREAT BASIN ENGINEERING, INC
5746 SOUTH 1475 EAST
OGDEN, UTAH 84403

LANDSCAPE ARCHITECT
MGB+A STUDIO
145 WEST 200 SOUTH
SALT LAKE CITY, UTAH 84101

STRUCTURAL ENGINEER
REAVELEY ENGINEERS
250 EAST 200 SOUTH, SUITE 1000
SALT LAKE CITY, UTAH 84111

M/P/FP ENGINEER
RESOLUT GROUP
181 EAST 5600 SOUTH, SUITE 200
MURRAY, UTAH 84107

E/T ENGINEER
LYNK ENGINEERS
324 SOUTH STATE STREET, SUITE 400
SALT LAKE CITY, UTAH 84111

Intermountain Health

UTAH VALLEY SPORTS PERFORMANCE CENTER

PROJECT ADDRESS: WEST 880 NORTH 200 WEST PROVO, UTAH 84604

SEAL & SIGNATURE

KEY PLAN

REVISION

NO.	DESCRIPTION	DATE

HKS PROJECT NUMBER
27487.000

DATE
08/26/2026

ISSUE
DESIGN DEVELOPMENT

SHEET TITLE
VERTICAL CIRCULATION - STAIRS

SHEET NO.
A8.03

© 2026 HKS, INC.

TITLE BLOCK VERSION: 20210930
MODEL: Autodesk Docs://27487.000 IH - UV Sports Performance Center 2025/A_IH-UV_Sports-Performance-Center_2025.rvt
PRINT DATE: 8/26/2026 1:36:31 PM TEMPLATE VERSION: 23.0.6

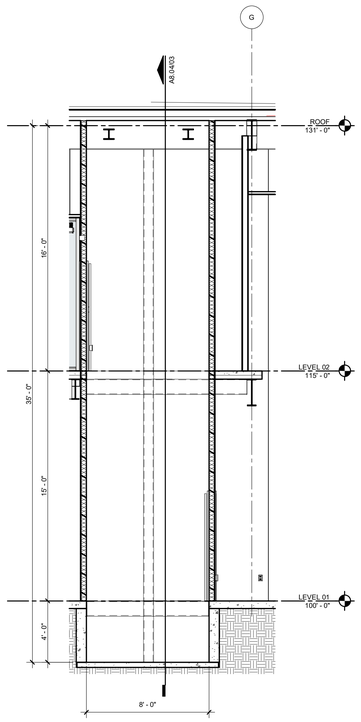

04 SECTION AT PUBLIC ELEVS - E/W
1/4" = 1'-0"

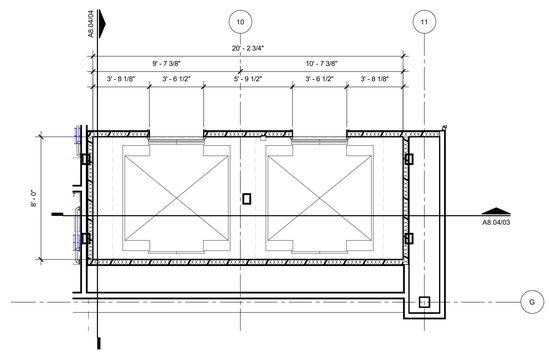

02 ENLARGED FLOOR PLAN - LEVEL 02 - PUBLIC ELEVS
1/4" = 1'-0"

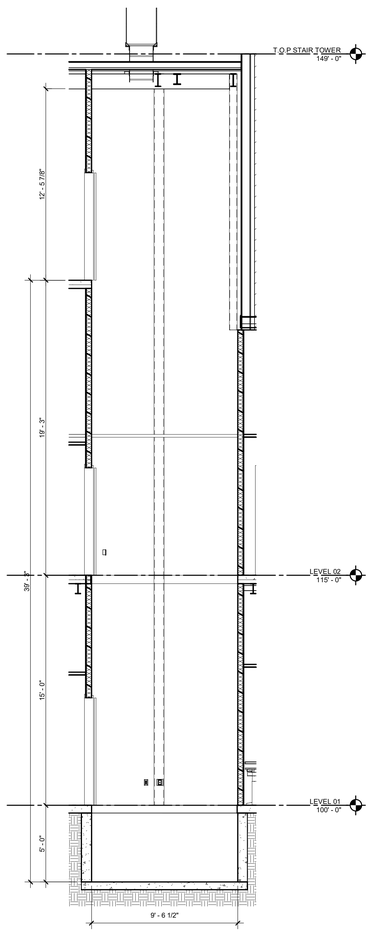

08 SECTION AT SERVICE ELEV - E/W
1/4" = 1'-0"

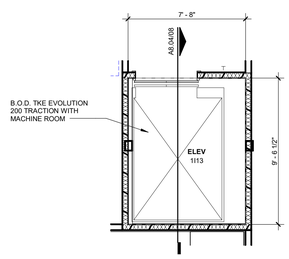

05 ENLARGED FLOOR PLAN - LEVEL 01 - SERVICE ELEV
1/4" = 1'-0"

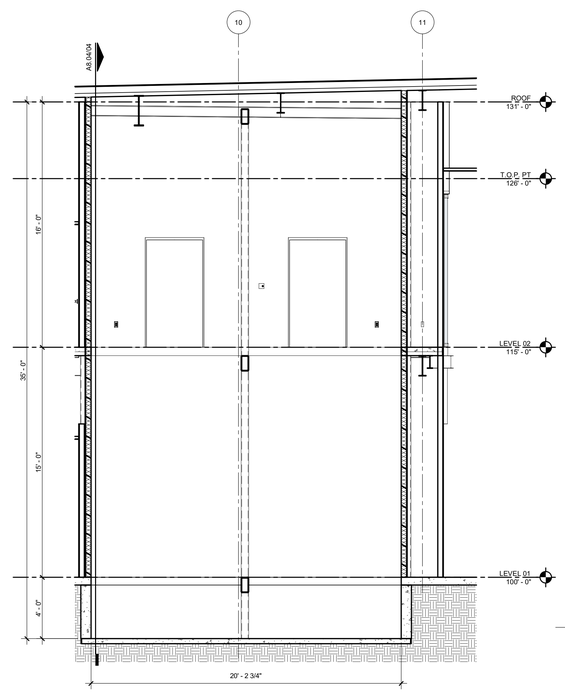

03 SECTION AT PUBLIC ELEVS - N/S
1/4" = 1'-0"

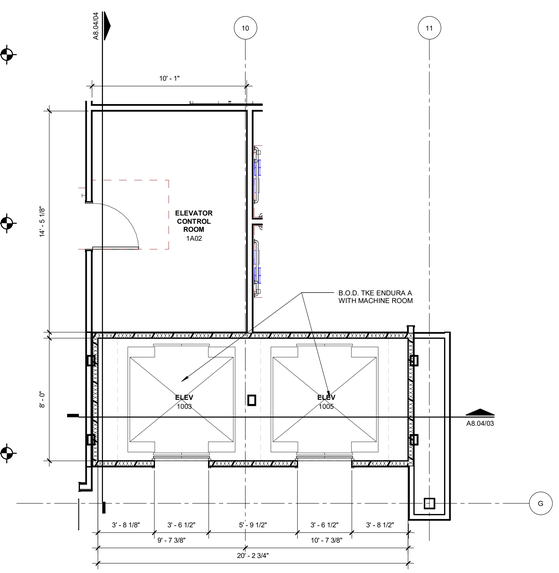

01 ENLARGED FLOOR PLAN - LEVEL 01 - PUBLIC ELEVS
1/4" = 1'-0"

© 2026 HKS, INC.

HKS

ARCHITECT
HKS ARCHITECTS, INC.
90 SOUTH 400 WEST, #110
SALT LAKE CITY, UTAH 84101

CIVIL ENGINEER
GREAT BASIN ENGINEERING, INC
5746 SOUTH 1475 EAST
OGDEN, UTAH 84403

LANDSCAPE ARCHITECT
MGB+A STUDIO
145 WEST 200 SOUTH
SALT LAKE CITY, UTAH 84101

STRUCTURAL ENGINEER
REAVELEY ENGINEERS
250 EAST 200 SOUTH, SUITE 1000
SALT LAKE CITY, UTAH 84111

M/P/FP ENGINEER
RESOLUT GROUP
181 EAST 5600 SOUTH, SUITE 200
MURRAY, UTAH 84107

E/T ENGINEER
LYNK ENGINEERS
324 SOUTH STATE STREET, SUITE 400
SALT LAKE CITY, UTAH 84111

Intermountain Health

UTAH VALLEY SPORTS PERFORMANCE CENTER

PROJECT ADDRESS: WEST 880 NORTH 200 WEST PROVO, UTAH 84604

SEAL & SIGNATURE

KEY PLAN

REVISION

NO.	DESCRIPTION	DATE

HKS PROJECT NUMBER
27487.000

DATE
08/26/2026

ISSUE
DESIGN DEVELOPMENT

SHEET TITLE
VERTICAL CIRCULATION - ELEVATOR

SHEET NO.
A8.04

TITLE BLOCK VERSION: 20251630
PRINT DATE: 8/26/2026 1:38:35 PM TEMPLATE VERSION: 23.0.6 MODEL: Autodesk Docs://27487.000_IH-UV Sports Performance Center 2025/A IH-UV Sports Performance Center_2025.rvt

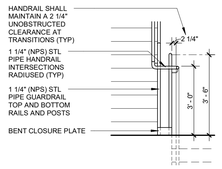

10 STAIR RAILING AT TRANSITION
3/8" = 1'-0"

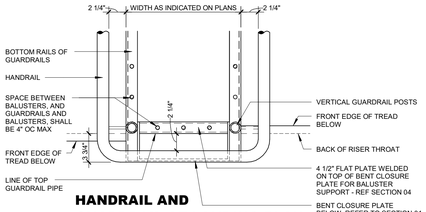

09B HANDRAIL AND GUARDRAIL AT LANDING PLAN
1 1/2" = 1'-0" THIS DETAIL ONLY REQUIRED WHEN DISTANCE BETWEEN STRINGERS IS 4" OR LARGER.

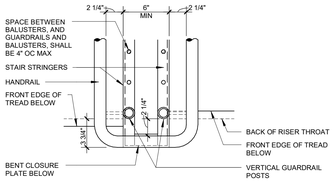

09 HANDRAIL AND GUARDRAIL AT LANDING PLAN
1 1/2" = 1'-0"

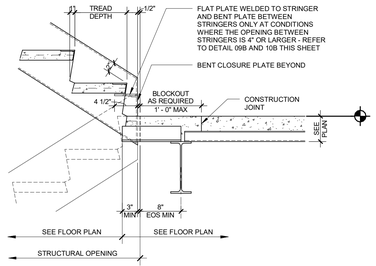

04 FLOOR LANDING AT CONCRETE ON METAL DECK
1" = 1'-0"

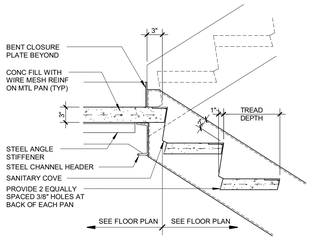

03 INTERMEDIATE LANDING
1" = 1'-0"

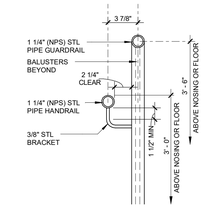

08 HANDRAIL AND GUARDRAIL SECTION
1 1/2" = 1'-0"

02 STRINGER TO SLAB CONNECTION
1" = 1'-0"

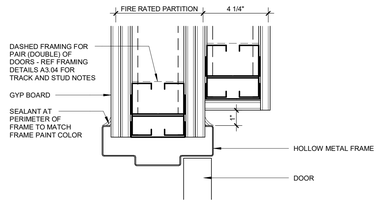

20 HEAD DETAIL AT STAIR DOOR
3" = 1'-0"

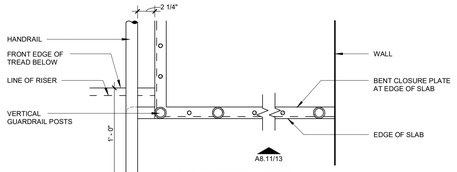

14 HANDRAIL AND GUARDRAIL AT TOP LANDING
1 1/2" = 1'-0"

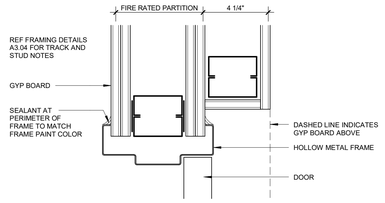

19 JAMB DETAIL AT STAIR DOOR
3" = 1'-0"

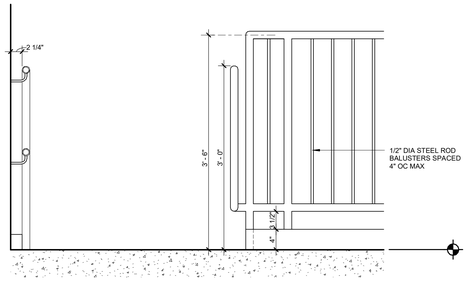

13 RAILING AND GUARDRAIL AT TOP LANDING
1" = 1'-0"

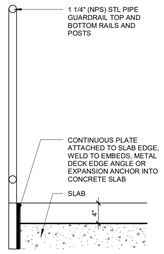

13B GUARDRAIL SECTION AT TOP LANDING
1" = 1'-0"

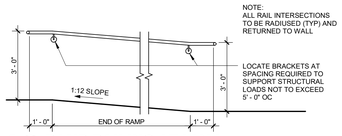

18 RAMP RAILING AT WALL
3/8" = 1'-0"

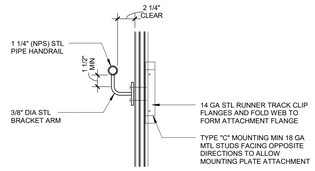

12 HANDRAIL MOUNTING AT GYP BOARD WALL
1 1/2" = 1'-0"

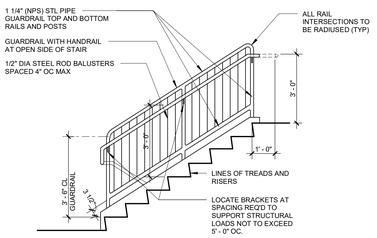

NOTE: SPACING OF BALUSTERS SHALL BE 4" OC MAX.

07 STAIR RAILING ELEVATION
3/8" = 1'-0"

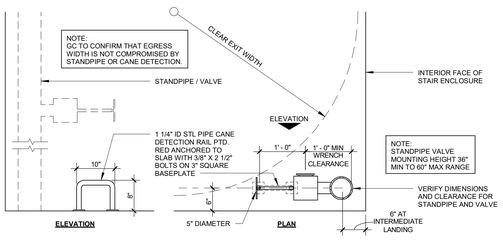

17 TYPICAL STANDPIPE
3/4" = 1'-0"

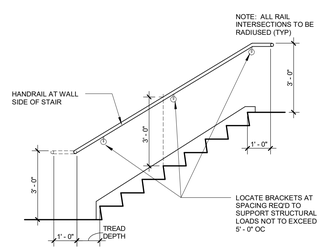

11 STAIR RAILING AT WALL
3/8" = 1'-0"

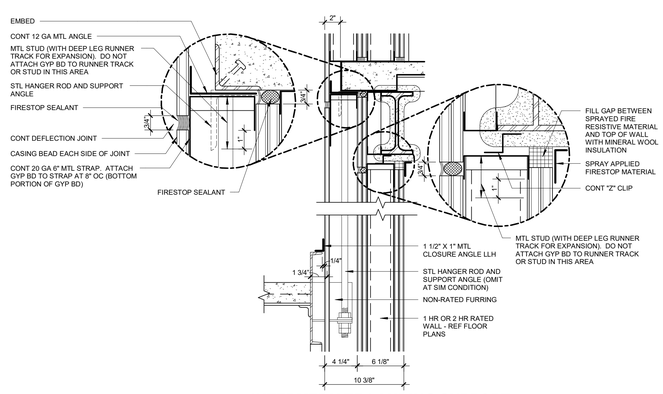

06 INTERMEDIATE LANDING SUPPORT
1 1/2" = 1'-0"

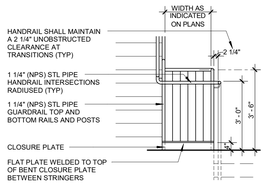

10B STAIR RAILING AT TRANSITION
3/8" = 1'-0" THIS DETAIL ONLY REQUIRED WHEN DISTANCE BETWEEN STRINGERS IS 4" OR LARGER.

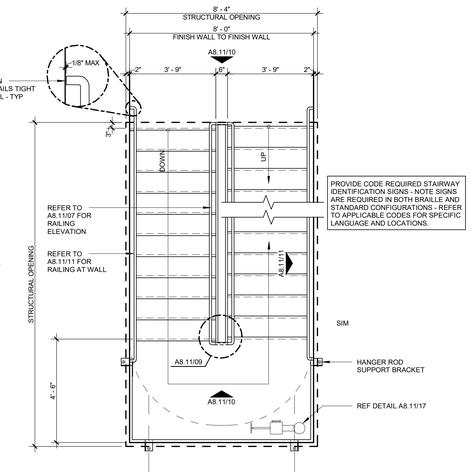

NOTE: REFER TO FLOOR PLANS FOR STAIR ORIENTATION.

01 STAIR PLAN LAYOUT
3/8" = 1'-0"

© 2026 HKS, INC.

HKS

ARCHITECT
HKS ARCHITECTS, INC.
90 SOUTH 400 WEST, #110
SALT LAKE CITY, UTAH 84101

CIVIL ENGINEER
GREAT BASIN ENGINEERING, INC
5746 SOUTH 1475 EAST
OGDEN, UTAH 84403

LANDSCAPE ARCHITECT
MGB+A STUDIO
145 WEST 200 SOUTH
SALT LAKE CITY, UTAH 84101

STRUCTURAL ENGINEER
REAVELEY ENGINEERS
250 EAST 200 SOUTH, SUITE 1000
SALT LAKE CITY, UTAH 84111

M/P/FP ENGINEER
RESOLUT GROUP
181 EAST 5600 SOUTH, SUITE 200
MURRAY, UTAH 84107

E/T ENGINEER
LYNK ENGINEERS
324 SOUTH STATE STREET, SUITE 400
SALT LAKE CITY, UTAH 84111

Intermountain Health

UTAH VALLEY SPORTS PERFORMANCE CENTER

PROJECT ADDRESS: WEST 880 NORTH 200 WEST PROVO, UTAH 84604

SEAL & SIGNATURE

KEY PLAN

REVISION

NO.	DESCRIPTION	DATE

HKS PROJECT NUMBER
27487.000

DATE
08/26/2026

ISSUE
DESIGN DEVELOPMENT

SHEET TITLE
STEEL STAIR PLANS, SECTIONS, AND DETAILS 01

SHEET NO.
A8.11

TITLE BLOCK VERSION: 20210930
MODEL: Autodesk Docs://27487.000_IH-UV Sports Performance Center_2025/A_IH-UV Sports Performance Center_2025.rvt
PRINT DATE: 8/26/2026 1:38:37 PM TEMPLATE VERSION: 23.0.6

TITLE BLOCK VERSION: 20251630

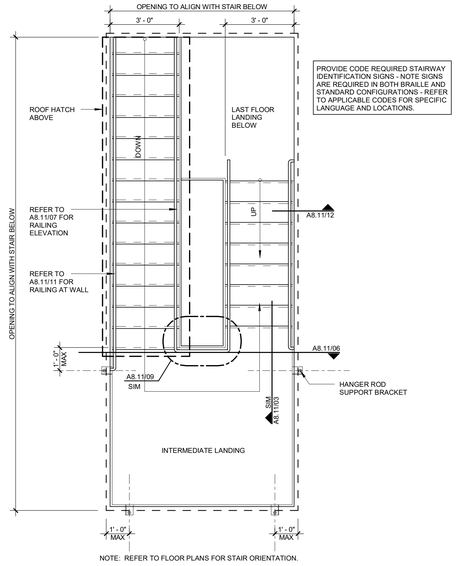

NOTE: REFER TO FLOOR PLANS FOR STAIR ORIENTATION.

03 STAIR TO ROOF HATCH PLAN LAYOUT
3/8" = 1'-0"

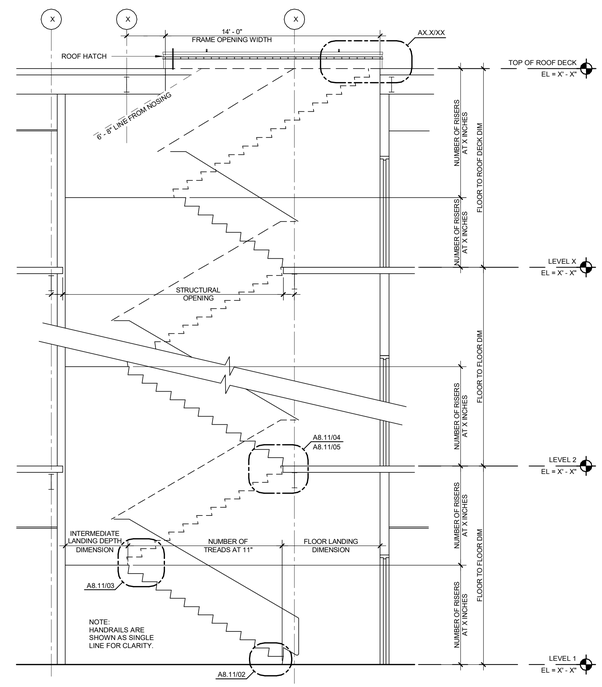

02 STAIR SECTION AT CONCRETE ON METAL DECK
1/4" = 1'-0"

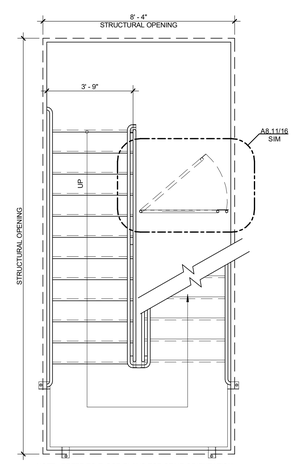

NOTE: REFER TO FLOOR PLANS FOR STAIR ORIENTATION

04 GATE AT LOWER EGRESS OF STAIR
3/8" = 1'-0"

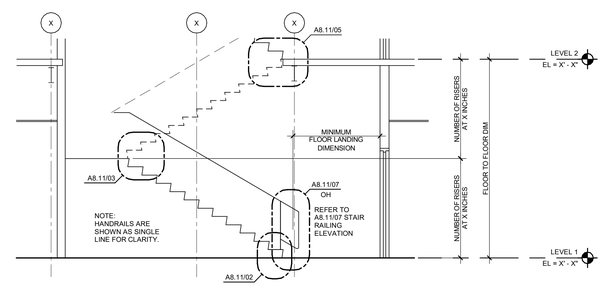

01 STAIR SECTION AT CONCRETE ON METAL DECK
1/4" = 1'-0"

© 2026 HKS, INC.

HKS

ARCHITECT
HKS ARCHITECTS, INC.
90 SOUTH 400 WEST, #110
SALT LAKE CITY, UTAH 84101

CIVIL ENGINEER
GREAT BASIN ENGINEERING, INC
5746 SOUTH 1475 EAST
OGDEN, UTAH 84403

LANDSCAPE ARCHITECT
MGB+A STUDIO
145 WEST 200 SOUTH
SALT LAKE CITY, UTAH 84101

STRUCTURAL ENGINEER
REAVELEY ENGINEERS
250 EAST 200 SOUTH, SUITE 1000
SALT LAKE CITY, UTAH 84111

M/P/FP ENGINEER
RESOLUT GROUP
181 EAST 5600 SOUTH, SUITE 200
MURRAY, UTAH 84107

E/T ENGINEER
LYNK ENGINEERS
324 SOUTH STATE STREET, SUITE 400
SALT LAKE CITY, UTAH 84111

Intermountain Health

UTAH VALLEY SPORTS PERFORMANCE CENTER

PROJECT ADDRESS: WEST 880 NORTH 200 WEST PROVO, UTAH 84604

SEAL & SIGNATURE

KEY PLAN

REVISION

NO.	DESCRIPTION	DATE

HKS PROJECT NUMBER
27487.000

DATE
08/26/2026

ISSUE
DESIGN DEVELOPMENT

SHEET TITLE
STEEL STAIR PLANS, SECTIONS, AND DETAILS 02

SHEET NO.
A8.12

PRINT DATE: 8/26/2026 1:36:38 PM TEMPLATE VERSION: 23.0.6 MODEL: Autodesk Docs://27487.000_H - UV Sports Performance Center_2025.rvt

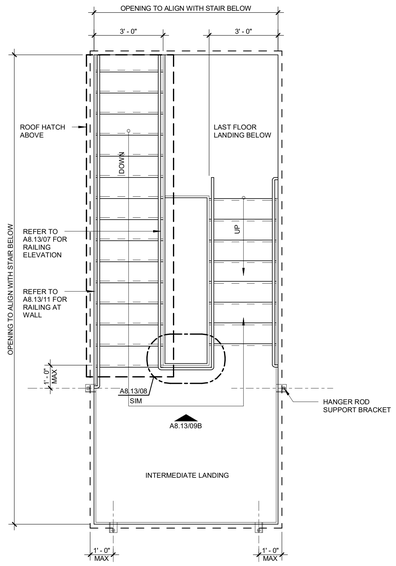

NOTE: REFER TO FLOOR PLANS FOR STAIR ORIENTATION.

19 STAIR TO ROOF HATCH PLAN LAYOUT
3/8" = 1'-0"

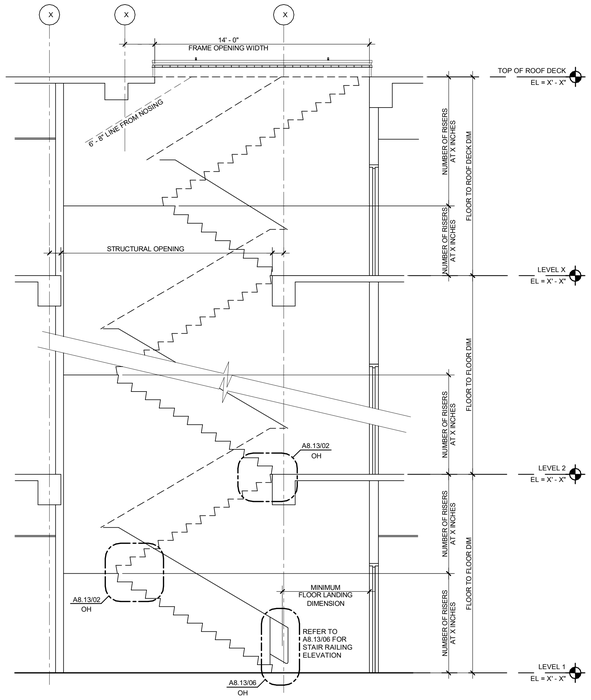

18 STAIR SECTION AT CONCRETE
1/4" = 1'-0"

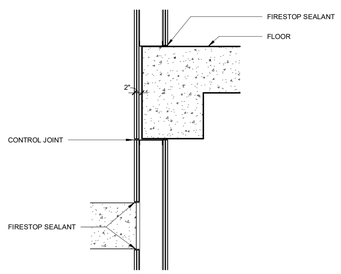

17 STAIR ENCLOSURE AT CONCRETE RUN AND LANDING
3/4" = 1'-0"

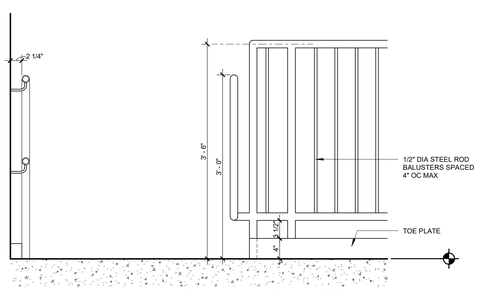

12 RAILING AND GUARDRAIL AT TOP LANDING
1" = 1'-0"

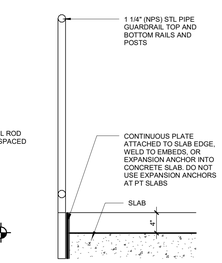

12B GUARDRAIL SECTION AT TOP LANDING
1" = 1'-0"

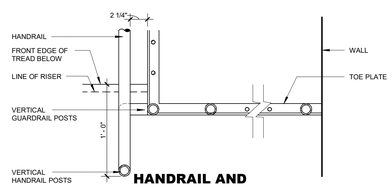

13 HANDRAIL AND GUARDRAIL AT LANDING
1 1/2" = 1'-0"

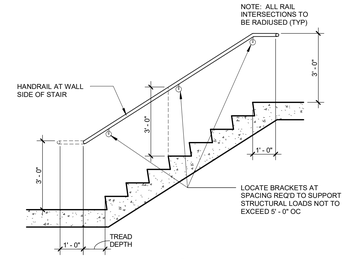

10 STAIR RAILING AT WALL
3/8" = 1'-0"

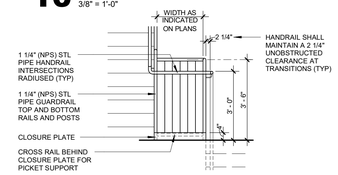

09B STAIR RAILING AT TRANSITION
3/8" = 1'-0" THIS DETAIL ONLY REQUIRED WHEN DISTANCE BETWEEN GUARDRAILS IS 4" OR LARGER.

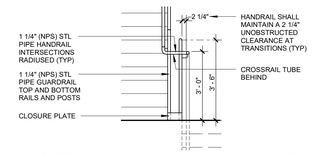

09 STAIR RAILING AT TRANSITION
3/8" = 1'-0"

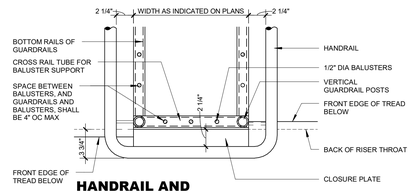

08B HANDRAIL AND GUARDRAIL AT LANDING PLAN
1 1/2" = 1'-0" THIS DETAIL ONLY REQUIRED WHEN DISTANCE BETWEEN GUARDRAILS IS 4" OR LARGER.

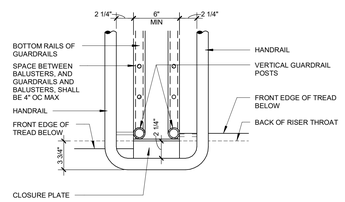

08 HANDRAIL AND GUARDRAIL AT LANDING PLAN
1 1/2" = 1'-0"

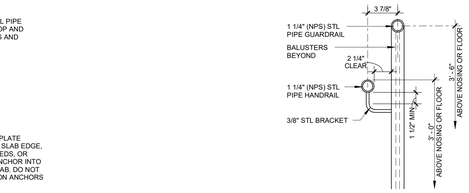

07 HANDRAIL AND GUARDRAIL SECTION
1 1/2" = 1'-0"

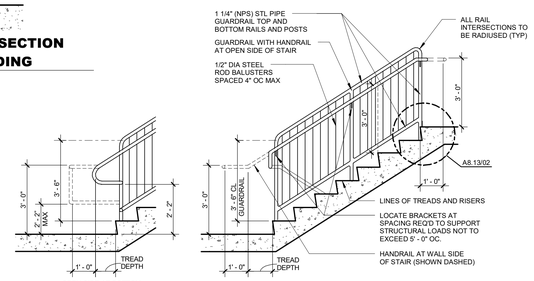

NOTE: SPACING OF BALUSTERS SHALL BE 4" OC MAX.

06 STAIR RAILING ELEVATION
3/8" = 1'-0"

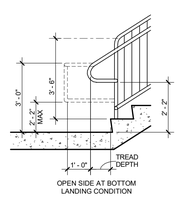

OPEN SIDE AT BOTTOM LANDING CONDITION

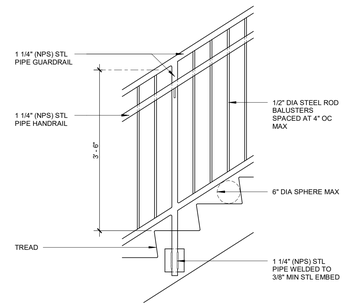

04 CONCRETE STAIR RAILING ELEVATION
3/4" = 1'-0"

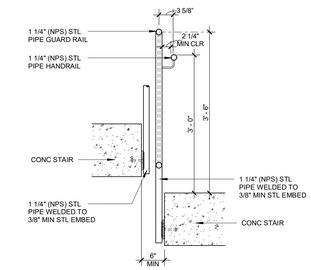

03 CONCRETE STAIR RAILING AND GUARDRAIL SECTION
3/4" = 1'-0"

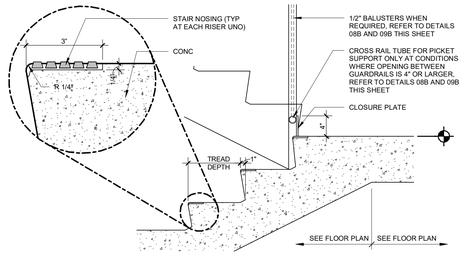

02 INTERMEDIATE FLOOR LANDING
1" = 1'-0"

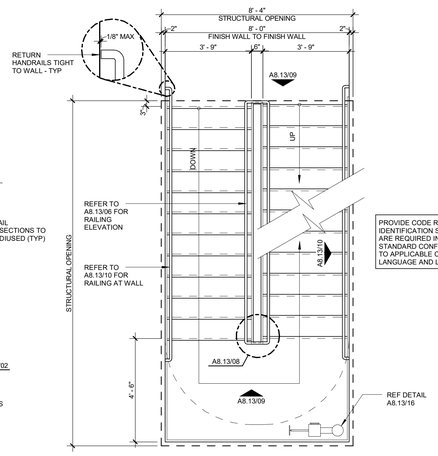

PROVIDE CODE REQUIRED STAIRWAY IDENTIFICATION SIGNS - NOTE SIGNS ARE REQUIRED IN BOTH BRAILLE AND STANDARD CONFIGURATIONS - REFER TO APPLICABLE CODES FOR SPECIFIC LANGUAGE AND LOCATIONS.

NOTE: REFER TO FLOOR PLANS FOR STAIR ORIENTATION.

01 STAIR PLAN LAYOUT
3/8" = 1'-0"

© 2026 HKS, INC.

HKS

ARCHITECT
HKS ARCHITECTS, INC.
90 SOUTH 400 WEST, #110
SALT LAKE CITY, UTAH 84101

CIVIL ENGINEER
GREAT BASIN ENGINEERING, INC
5746 SOUTH 1475 EAST
OGDEN, UTAH 84403

LANDSCAPE ARCHITECT
MGB+A STUDIO
145 WEST 200 SOUTH
SALT LAKE CITY, UTAH 84101

STRUCTURAL ENGINEER
REAVELEY ENGINEERS
250 EAST 200 SOUTH, SUITE 1000
SALT LAKE CITY, UTAH 84111

M/P/FP ENGINEER
RESOLUT GROUP
181 EAST 5600 SOUTH, SUITE 200
MURRAY, UTAH 84107

E/T ENGINEER
LYNK ENGINEERS
324 SOUTH STATE STREET, SUITE 400
SALT LAKE CITY, UTAH 84111

Intermountain Health

UTAH VALLEY SPORTS PERFORMANCE CENTER

PROJECT ADDRESS: WEST 880 NORTH 200 WEST PROVO, UTAH 84604

SEAL & SIGNATURE

KEY PLAN

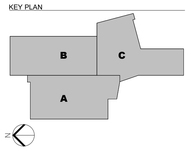

REVISION

NO.	DESCRIPTION	DATE

HKS PROJECT NUMBER
27487.000

DATE
08/26/2026

ISSUE
DESIGN DEVELOPMENT

SHEET TITLE
CONCRETE STAIR PLANS, SECTIONS, AND DETAILS

SHEET NO.
A8.13

TITLE BLOCK VERSION: 20210930
MODEL: Autodesk Docs://27487.000_IH-UV Sports Performance Center 2025/A_IHUV_Sports-Performance-Center_2025.rvt
PRINT DATE: 8/26/2026 1:36:41 PM TEMPLATE VERSION: 23.0.6

TITLE BLOCK VERSION: 20251630

PRINT DATE: 8/26/2026 1:36:42 PM TEMPLATE VERSION: 23.0.6 MODEL: Autodesk Docs://27487.000_IH-UV Sports Performance Center_2025/A_IH-UV_Sports-Performance-Center_2025.rvt

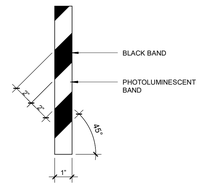

NOTE:
PLACEMENT AND DIMENSIONS OF STRIPING AND MARKINGS SHALL BE UNIFORM THROUGHOUT THE SAME ENCLOSURE.

05 ALTERNATING STRIPE AT STANDPIPE AND PROTRUDING OBJECTS
NTS

04 EMERGENCY EXIT SYMBOL
3/4" = 1'-0"

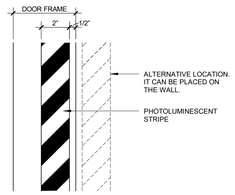

03 STRIPE AT DOOR FRAME
NTS

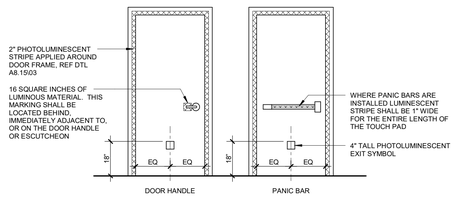

02 EXIT DISCHARGE DOOR ELEVATIONS
3/8" = 1'-0"

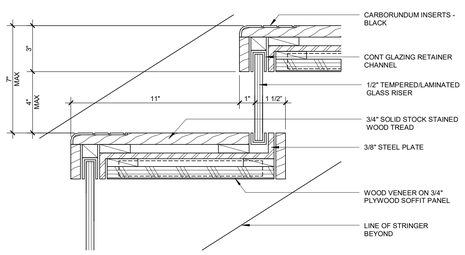

06 WOOD STAIR TREAD
3" = 1'-0"

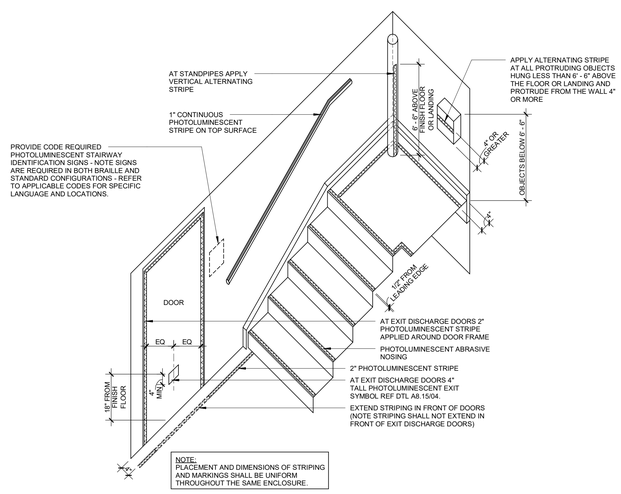

NOTE:
PLACEMENT AND DIMENSIONS OF STRIPING AND MARKINGS SHALL BE UNIFORM THROUGHOUT THE SAME ENCLOSURE.

01 LUMINESCENT EGRESS MARKINGS
NTS

© 2026 HKS, INC.

HKS

ARCHITECT
HKS ARCHITECTS, INC.
90 SOUTH 400 WEST, #110
SALT LAKE CITY, UTAH 84101

CIVIL ENGINEER
GREAT BASIN ENGINEERING, INC
5746 SOUTH 1475 EAST
OGDEN, UTAH 84403

LANDSCAPE ARCHITECT
MGB+A STUDIO
145 WEST 200 SOUTH
SALT LAKE CITY, UTAH 84101

STRUCTURAL ENGINEER
REAVELEY ENGINEERS
250 EAST 200 SOUTH, SUITE 1000
SALT LAKE CITY, UTAH 84111

M/P/FP ENGINEER
RESOLUT GROUP
181 EAST 5600 SOUTH, SUITE 200
MURRAY, UTAH 84107

E/T ENGINEER
LYNK ENGINEERS
324 SOUTH STATE STREET, SUITE 400
SALT LAKE CITY, UTAH 84111

Intermountain Health

UTAH VALLEY SPORTS PERFORMANCE CENTER

PROJECT ADDRESS: WEST 880 NORTH 200 WEST PROVO, UTAH 84604

SEAL & SIGNATURE

KEY PLAN

REVISION

NO.	DESCRIPTION	DATE

HKS PROJECT NUMBER
27487.000

DATE
08/26/2026

ISSUE
DESIGN DEVELOPMENT

SHEET TITLE
STAIRS LUMINESCENT EGRESS PATH MARKINGS

SHEET NO.
A8.15

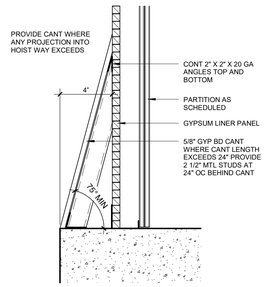

HOISTWAY DETAIL
13 PROJECTION CANT
NTS

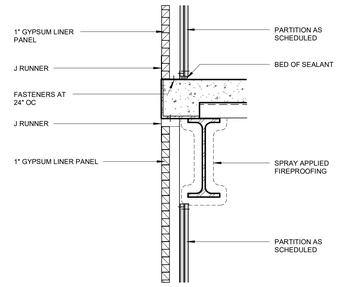

08 SHAFTWALL AT ELEVATOR
1 1/2" = 1'-0"

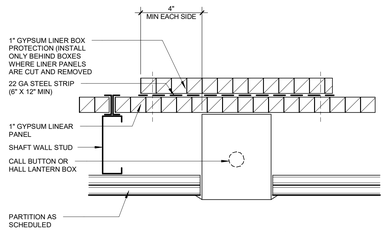

SHAFTWALL PENETRATION DETAIL
04 AT CALL BOX AND OR HALL LANTERN
3" = 1'-0"

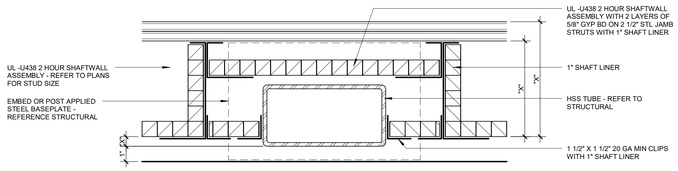

ELEVATOR SHAFT SIDE

FIRE PROTECTION DETAIL AT ELEVATOR GUIDERAIL SUPPORT - STEEL TUBE AT 2 HOUR WALL
16
3" = 1'-0"

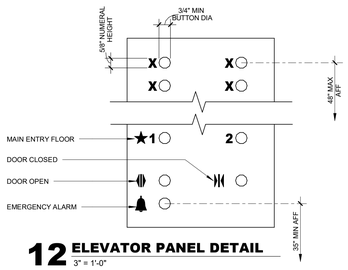

12 ELEVATOR PANEL DETAIL
3" = 1'-0"

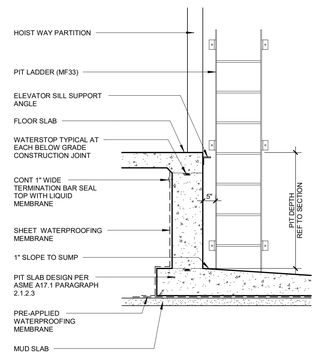

PIT SECTION WITH
07 POSITIVE SIDE WATERPROOFING
1/2" = 1'-0"

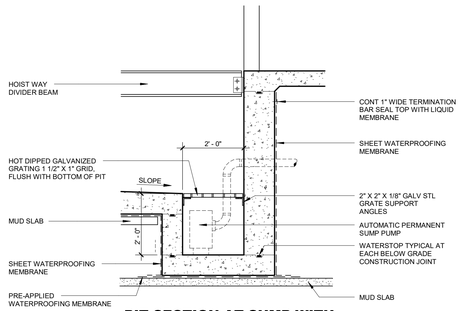

PIT SECTION AT SUMP WITH
03 POSITIVE SIDE WATERPROOFING
1/2" = 1'-0"

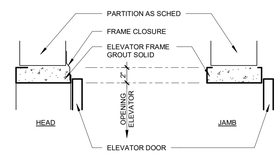

ELEVATOR DOOR DETAIL
11 MASONRY/CONCRETE
1 1/2" = 1'-0"

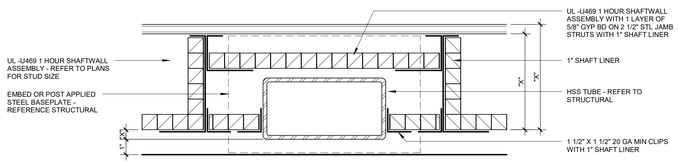

ELEVATOR SHAFT SIDE

FIRE PROTECTION DETAIL AT ELEVATOR GUIDERAIL SUPPORT - STEEL TUBE AT 1 HOUR WALL
15
3" = 1'-0"

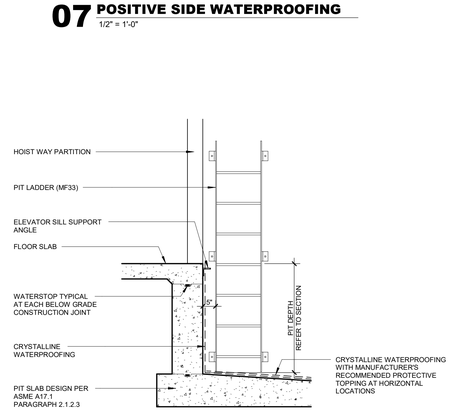

PIT SECTION WITH
06 CRYSTALLINE WATERPROOFING
1/2" = 1'-0"

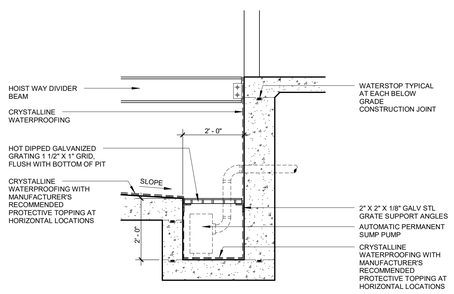

PIT SECTION AT SUMP WITH
02 CRYSTALLINE WATERPROOFING
1/2" = 1'-0"

ELEVATOR
10 DOOR DETAIL DRYWALL
1 1/2" = 1'-0"

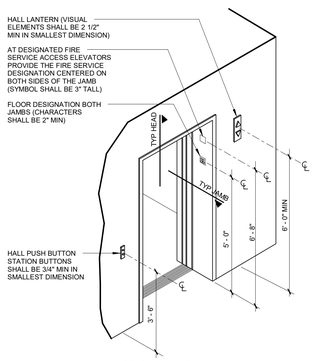

ELEVATOR ENTRY
14 AND MOUNTING HEIGHTS
NTS

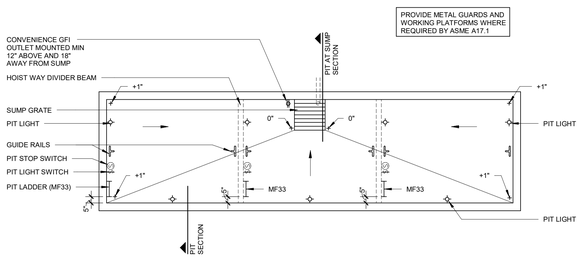

ELEVATOR PIT
09 PLAN (TYPICAL 3 CAB)
1/4" = 1'-0"

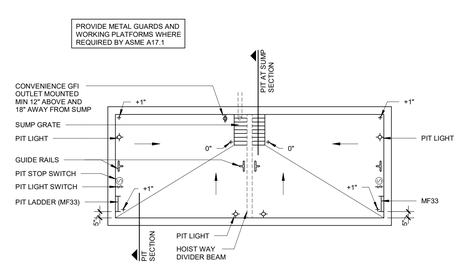

ELEVATOR PIT
05 PLAN (TYPICAL 2 CAB)
1/4" = 1'-0"

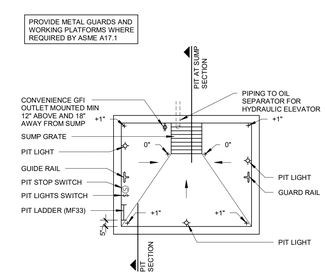

01 ELEVATOR PIT PLAN (TYPICAL 1 CAB)
1/4" = 1'-0"

© 2026 HKS, INC.

HKS

ARCHITECT
HKS ARCHITECTS, INC.
90 SOUTH 400 WEST, #110
SALT LAKE CITY, UTAH 84101

CIVIL ENGINEER
GREAT BASIN ENGINEERING, INC
5746 SOUTH 1475 EAST
OGDEN, UTAH 84403

LANDSCAPE ARCHITECT
MGB+A STUDIO
145 WEST 200 SOUTH
SALT LAKE CITY, UTAH 84101

STRUCTURAL ENGINEER
REAVELEY ENGINEERS
250 EAST 200 SOUTH, SUITE 1000
SALT LAKE CITY, UTAH 84111

M/P/FP ENGINEER
RESOLUT GROUP
181 EAST 5600 SOUTH, SUITE 200
MURRAY, UTAH 84107

E/T ENGINEER
LYNK ENGINEERS
324 SOUTH STATE STREET, SUITE 400
SALT LAKE CITY, UTAH 84111

Intermountain Health

UTAH VALLEY SPORTS PERFORMANCE CENTER

PROJECT ADDRESS: WEST 880 NORTH 200 WEST PROVO, UTAH 84604

SEAL & SIGNATURE

KEY PLAN

REVISION

NO.	DESCRIPTION	DATE

HKS PROJECT NUMBER
27487.000

DATE
08/26/2026

ISSUE
DESIGN DEVELOPMENT

SHEET TITLE
ELEVATOR DETAILS

SHEET NO.
A8.21

TITLE BLOCK VERSION: 20251630
MODEL: Autodesk Docs://27487.000_IH - UV Sports Performance Center 2025/A_IH-UV Sports Performance Center_2025.rvt
PRINT DATE: 8/26/2026 1:36:44 PM TEMPLATE VERSION: 23.0.6

INTERIOR DESIGN SELECTION SUMMARY

CODE	DESCRIPTION	MANUFACTURER	MODEL	COLOR	Material: Size	COMMENTS
ACT08	ACOUSTICAL GYP CEILING	USG	ENSEMBLE			
CEILING						
AB01	ACOUSTIC BAFFLE CEILING	ACOUFELT	TRUSS	WOOD LOOK	2" WIDE X 9" DEEP, 3" SPACING	PROVIDE BLACK FELT PANELS ABOVE TO CONCEAL PLENUM
SF01	STRETCH FABRIC CEILING	BARRISOL				
010520.A00 GENERAL SELECTIONS - INTERIOR DESIGN SELECTIONS						
WD01	INTERIOR WOODS	INTERIOR ENVIRONMENTS	QUARTERED MAPLE	CUSTOM		FINISH: BECKER ACROMA, DM5315-00XX; UNICLEAR SP / SATIN FINISH
WD02	INTERIOR WOODS	9WOOD	NATURAL MAPLE	MIXED GRAIN		WOOD SPECIES AND CUT FOR TRANSPARENT FINISH CHECK.06 4023
ML01	METAL LAMINATE	CHEMETAL				
PL01	PLASTIC LAMINATE	ARBORITE	W2001	NATURAL ARTISAN WALNUT		
PL02	PLASTIC LAMINATE	WILSONART	4944-38	CASUAL LINEN		FINE VELVET FINISH
PL03	PLASTIC LAMINATE	WILSONART	15514	FEATHER VELVET		ULTRA MATTE, FINGERPRINT RESISTANT
SO1	SOLID SURFACE FABRICATIONS	WILSONART	9255SS	ANGORA SANDS		TYPE: [SOLID SURFACING] OR [QUARTZ AGGLOMERATE] OR [CULTURED MARBLE] CHECK SECTION: 12 3661
SO2	SOLID SURFACE FABRICATIONS	WILSONART	1500SL	GREY		TYPE: [SOLID SURFACING] OR [QUARTZ AGGLOMERATE] OR [CULTURED MARBLE] CHECK SECTION: 12 3661
057000.A00 ORNAMENTAL METAL						
OM01	ORNAMENTAL FORMED METALS	TO MATCH ARCHITECT CONTROL SAMPLE	STAINLESS STEEL PLATE	STAINLESS STEEL	1/4"	ELEVATOR SURROUNDS
066100.A00 SIMULATED STONE FABRICATIONS						
QA01	QUARTZ AGGLOMERATE	CAESARSTONE	5031 STATUARIO MAXIMUS QUARTZ COUNTERTOP			
088113.A00 DECORATIVE GLASS GLAZING						
DG01	DECORATIVE GLAZING	MCGRORY GLASS	CUSTOM GRADIENT	BLUE GRADIENT		
DG02	DECORATIVE GLAZING			CLEAR, LOW IRON		9/16" THICK TEMPERED AND LAMINATED GLASS. SENTRYGLAS OR SAFLEX STRUCTURAL INTERLAYER
093000.A00 TILING						
T01	TILE	CROSSVILLE	NOTORIOUS PORCELAIN TILE	NTR01 - FEMME FATALE UPS		TYPE: PORCELAIN WALL AND FLOOR TILE PATTERN: AS INDICATED ON DRAWINGS TRIM: PROVIDE TILE TRIM AND ACCESSORIES THAT MATCH COLOR AND FINISH OF ADJOINING FLAT TILE AS REQUIRED TO PREVENT UNFINISHED EDGES OF TILE FROM BEING EXPOSED TO VIEW; GROUT MANF. COLOR & NUMBER:XXX
TB01	TILE	CROSSVILLE	NOTORIOUS PORCELAIN TILE	NTR01 - FEMME FATALE UPS		TYPE: PORCELAIN WALL AND FLOOR TILE PATTERN: AS INDICATED ON DRAWINGS TRIM: PROVIDE TILE TRIM AND ACCESSORIES THAT MATCH COLOR AND FINISH OF ADJOINING FLAT TILE AS REQUIRED TO PREVENT UNFINISHED EDGES OF TILE FROM BEING EXPOSED TO VIEW; GROUT MANF. COLOR & NUMBER:XXX
095113.A00 ACOUSTICAL PANEL CEILING						
ACT01	ACOUSTIC CEILING TILE	ARMSTRONG	ULTIMA SQUARE LAY-IN, 1913HRC	WHITE	24" X 48" X 3/4"	THROUGHOUT, U.N.O; EDGE DETAIL: SQUARE; GRID SYSTEM: PRELUDE XL 15/16" EXPOSED TEE; GRID COLOR: WHITE
ACT02	ACOUSTIC CEILING TILE	ARMSTRONG	ULTIMA SQUARE LAY-IN, 1910HRC	WHITE	24" X 24" X 7/8"	LOCATIONS: EXAM ROOMS, IMAGING SPACES, HAND THERAPY, PREP / RECOVERY ROOMS, PROCEDURE ROOMS, PRIVATE MODALITY ROOMS, NURSE STATIONS, PACU BAYS; SPECIFY EDGE DETAIL:SQUARE; GRID SYSTEM: PRELUDE XL 15/16" EXPOSED TEE; GRID COLOR: WHIT
ACT03	ACOUSTIC CEILING TILE	ARMSTRONG	OPTIMA HEALTHZONE SQUARE LAY-IN, 3115PB	WHITE	24" X 48" X 1"	INSTRUMENT PROCESSING; SPECIFY EDGE DETAIL: SQUARE; GRID SYSTEM: PRELUDE XL 15/16" EXPOSED TEE; GRID COLOR: WHITE
ACT04	ACOUSTIC CEILING TILE	ARMSTRONG	DESIGNFLEX, LYRA - PATTERN SR9, TEGULAR EDGE TILE	WHITE		WAITING AND RECEPTION; SPECIFY EDGE DETAIL: XXX; GRID SYSTEM: SUPRAFINE XL 9/16"; GRID COLOR: WHITE
ACT05	ACOUSTIC CEILING TILE	ARMSTRONG	TECTUM			CEILING PANEL
ACT06	ACOUSTIC CEILING TILE	ARMSTRONG	ACOUSTIBUILT	WHITE		EDGE DETAIL: XXX; GRID SYSTEM: XXX; GRID COLOR: XXX; ACCESSORIES: XXX; PERFORATIONS:
095133.A00 ACOUSTICAL METAL PANEL						
AMP01	ACOUSTICAL METAL PANEL	ARKTURA	GRAPHIC PERF SOLUTIONS INTERIOR			EDGE DETAIL: XXX; GRID SYSTEM: XXX; GRID COLOR: XXX; ACCESSORIES: XXX; PERFORATIONS:
096500.B03 SOLID VINYL FLOOR TILE						
RT01	LUXURY VINYL TILE	TARKETT	BRANCHED OAK	BROOK HILL		SEAM TREATMENT: [HEAT WELD][CHEMICAL WELD]; BASE: [INTEGRAL][SEPERATE][6" HIGH]
096500.C01 RESILIENT SHEET FLOORING						
RS01	RESILIENT SHEET FLOORING	TARKETT	IQ EMINENT	WHITE GREY 126		SEAM TREATMENT: [HEAT WELD][CHEMICAL WELD]; BASE: [INTEGRAL][SEPERATE][6" HIGH]
RS02	RESILIENT SHEET FLOORING	TARKETT	IQ EMINENT	WARM GREY 878		SEAM TREATMENT: [HEAT WELD][CHEMICAL WELD]; BASE: [INTEGRAL][SEPERATE][6" HIGH]
RUBBER SHEET FLOORING						
RF01	RUBBER SHEET FLOORING	NORA	SENTICA	SNOW DAY 6520		SEAM TREATMENT: [HEAT WELD][CHEMICAL WELD]; BASE: [INTEGRAL][SEPERATE][6" HIGH]
SPORT RUBBER FLOORING						
SRF01	SPORT RUBBER FLOORING	MOHAWK HERO FLOORING	VITALITY - 20% NIKE GRIND RUBBER	DOVE	8 MM	SPORTS PERFORMANCE AND PHYSICAL THERAPY
SRF02	SPORT RUBBER FLOORING	MONDO	SUPER X 720 K39	P31 MEDIUM GREY	13.5 MM	RUNNING LANE
SRF03	SPORT RUBBER FLOORING	MONDO	SUPER X 720 K39	P18 MEDIUM BLUE	13.5 MM	RUNNING LANE
096513.A00 INTEGRAL COVE						
IC01	INTEGRAL COVE BASE		TO MATCH CORRESPONDING FLOOR			TYPE: [COVED AT RESILIENT FLOOR] OR [STRAIGHT AT CARPET]
RESILIENT BASE						
RB01	RUBBER BASE	TARKETT / JOHNSONITE	RUBBER BASE, WITH TOE	32 PEBBLE	4" H	ROLLED GOODS, JOB FORMED CORNERS
RB02	RUBBER BASE	TARKETT / JOHNSONITE	MILLWORK RUBBER BASE, EQUINOX	32 PEBBLE	4.5" H	MILLWORK AND RECEPTION ONLY; MITERED INSIDE AND OUTSIDE CORNERS
096623.A00						
TRB01	TERRAZZO	TERRAZZO & MARBLE	TM 17GG-463			DIVIDER STRIP SIZE: [1/8 IN (3 MM)] OR [1/4 IN (6 MM)] OR [3/8 IN (10 MM), DIVIDER STRIPS: [WHITE ZINC] OR [HALF-HARD BRASS] OR [PLASTIC]] [NTMA PLATE NO. XX]
TRB02	TERRAZZO	TERRAZZO & MARBLE	TM 17GG-464			DIVIDER STRIP SIZE: [1/8 IN (3 MM)] OR [1/4 IN (6 MM)] OR [3/8 IN (10 MM), DIVIDER STRIPS: [WHITE ZINC] OR [HALF-HARD BRASS] OR [PLASTIC]] [NTMA PLATE NO. XX]
THIN-SET TERRAZZO FLOORING						
TR01	TERRAZZO	TERRAZZO & MARBLE	TM 17GG-463			DIVIDER STRIP SIZE: [1/8 IN (3 MM)] OR [1/4 IN (6 MM)] OR [3/8 IN (10 MM), DIVIDER STRIPS: [WHITE ZINC] OR [HALF-HARD BRASS] OR [PLASTIC]] [NTMA PLATE NO. XX]
TR02	TERRAZZO	TERRAZZO & MARBLE	TM 17GG-464			DIVIDER STRIP SIZE: [1/8 IN (3 MM)] OR [1/4 IN (6 MM)] OR [3/8 IN (10 MM), DIVIDER STRIPS: [WHITE ZINC] OR [HALF-HARD BRASS] OR [PLASTIC]] [NTMA PLATE NO. XX]
TR03	TERRAZZO	TERRAZZO & MARBLE	TM 17GG-465			DIVIDER STRIP SIZE: [1/8 IN (3 MM)] OR [1/4 IN (6 MM)] OR [3/8 IN (10 MM), DIVIDER STRIPS: [WHITE ZINC] OR [HALF-HARD BRASS] OR [PLASTIC]] [NTMA PLATE NO. XX]
096723.A00 RESINOUS FLOORING						
ERF01	EPOXY RESIN FLOORING	STONHARD	STONRES RTZ	SOLITUDE		
URETHANE CEMENT						
UC01	URETHANE CEMENT	STONHARD	STONCLAD UT	PEWTER		HYDRO
096800.B01 COURT FLOOR						
CF01	HARDWOOD SPORTS FLOORING SYSTEM	CONNOR SPORTS	VIP II	MAPLE	25/32" x 2-1/4"	SPECIFY INSTALLATION METHOD
TILE CARPETING						
CT01	CARPET TILE	SHAW	COMMUNITY HEDDLE 5T320	WOOL 01105		BRICK INSTALLATION
CT02	CARPET TILE	SHAW	COMMUNITY HEDDLE 5T320	BLENDED 01555		BRICK INSTALLATION
WOM01	CARPET TILE	MOHAWK	STEP UP II QL311	983 IRON ORE	24" X 24"	INSTALLATION: MONOLITHIC
TURF						
TRF01	TURF	SHAW SPORTS TURF	ELEVATE			INDOOR
TRF02	TURF	SHAW SPORTS TURF	GAME ON B1K			OUTDOOR
097200.A00 WALL COVERING						
WC01	WALL COVERINGS	KOROSEAL	GILDED LINEN	REVERENCE		
WC02	WALL COVERINGS	KOROSEAL	CUSTOM DIGITAL	CUSTOM		LOBBY
099100.A00 PAINTING						
EPT01	EPOXY PAINT	SHERWIN WILLIAMS	SW 7005	PURE WHITE		TYPICAL
PT01	INTERIOR PAINT	SHERWIN WILLIAMS	SW 7005	PURE WHITE		EGGSHELL; TYPICAL PAINT
PT01A	INTERIOR PAINT	SHERWIN WILLIAMS	SW 7005	PURE WHITE		FLAT; TYPICAL GYP CEILINGS
PT02	INTERIOR PAINT	SHERWIN WILLIAMS	SW 7043	INTELLECTUAL GRAY		SEMI-GLOSS; DOOR FRAMES
PT03	INTERIOR PAINT	SHERWIN WILLIAMS	SW 6230	RAINSTORM		EGGSHELL; ACCENT PAINT
PT04	INTERIOR PAINT	SHERWIN WILLIAMS	SW 9139	DEBONAIR		EGGSHELL; ACCENT PAINT
PT05	INTERIOR PAINT	SHERWIN WILLIAMS	SW 9674	LEAFLET		EGGSHELL; ACCENT PAINT
102115.A00 CUBICLE SPECIALTIES						
CC01	CUBICLE SPECIALTIES	MAHARAM	MODERATE 511459	002 VAPOR		OFF WHITE MESH, 12" A.F.F.
102613.D12 CG-CORNER GUARD						
CG1	CORNER GUARDS	INPRO	ENVIROGT G2 SERIES	238 FEATHER	1-1/2" WING, 48" HIGH	MOUNT ABOVE BASE
CG2	CORNER GUARDS	INPRO	ENVIROGT G2 SERIES	238 FEATHER	1-1/2" WING, FULL HEIGHT	MOUNT ABOVE BASE
102613.D22 WALL PROTECTION						
CR1	CHAIR RAIL	-	-	MATCH WD01		MILLWORK CHAIR RAIL
WP1	SHEET WALL PROTECTION	INPRO	PALLADIUM RIGID SHEET	238 FEATHER	48" HIGH	MOUNT ABOVE BASE, WITH TOP CAP AND CORNER TRIM
WP2	SHEET WALL PROTECTION	INPRO	PALLADIUM RIGID SHEET	238 FEATHER	72" HIGH	MOUNT ABOVE BASE, WITH TOP CAP AND CORNER TRIM
120500.A01 INTERIOR FABRICS						
FB01	ATHLETIC PADDING	DRAPER	WALL PAD	GREY		
122413.A00 ROLLER WINDOW SHADES						
WT01	ROLLER WINDOW SHADES	MECHO SHADE	THERMOVEIL 1500 SERIES	1519 SILVER BIRCH, 3%		MANUAL SINGLE ROLLER SHADES AT EXTERIOR WINDOWS, INSIDE MOUNT - VERIFY WITH BUILDING LANDLORD OF ANY STANDARD SHADE REQUIREMENTS
WT02	ROLLER WINDOW SHADES	MECHO SHADE	THERMOVEIL 1500 SERIES / CHELSEA 200 SERIES	1519 SILVER BIRCH, 3% / 0262 SLATE, BLACKOUT		MANUAL DUAL ROLLER SHADE AT EXAM AND TREATMENT ROOMS, INSIDE MOUNT
142000 ELEVATOR CAB						
EC01	ELEVATOR CAB INTERIOR	THYSSEN KRUPP	LAMINATE & BRUSHED STAINLESS STEEL PANELS	TO MATCH PL01 & OM01		PUBLIC ELEVATORS
EC02	ELEVATOR CAB INTERIOR	THYSSEN KRUPP	STAINLESS STEEL & BRUSHED STAINLESS STEEL PANELS	TO MATCH OM01		SERVICE/NON-CLINICAL ELEVATORS

FINISH GENERAL NOTES

A. GENERAL

1. PATTERN NAME, COLOR AND NUMBER FOR EACH MATERIAL ARE GIVEN WHEREVER POSSIBLE ON THE FINISH PLAN. IT SHALL BE THE RESPONSIBILITY OF THE CONTRACTOR TO BRING ANY DISCREPANCIES TO THE ATTENTION OF THE ARCHITECT/DESIGNER SO THAT THE CORRECT MATERIAL IS INSTALLED.
2. FLOORING HATCH SHOWN ONLY IF PATTERN IS USED UNO.
3. ALL PLASTIC LAMINATE WOOD GRAIN PATTERNS SHALL RUN IN A VERTICAL DIRECTION, UNO.
4. ALL INTERIOR ADHESIVES TO HAVE LOW VOC EMISSIONS.
5. ALL INTERIOR PAINTS TO BE LOW-ODOR AND HAVE LOW VOC EMISSIONS.
6. CONTRACTOR SHALL NOTIFY THE INTERIOR DESIGNER OF ITEMS REQUIRING FINISH SELECTIONS NOT CLARIFIED IN THE CONTRACT DOCUMENTS OR IN THE SPECIFICATIONS.

B. CUBICLE CURTAINS

1. SHOWER CURTAINS, CUBICLE CURTAINS AND ASSOCIATED TRACK, SHALL BE CONTRACTOR SUPPLIED AND INSTALLED
2. DIMENSIONS AT CUBICLE CURTAIN TRACKS ARE TO CENTER OF TRACK, TYP.. ALL CUBICLE CURTAIN TRACKS MUST CLEAR DOOR SWINGS BY 3' MINIMUM.

C. FLOORING

1. WELDING ROD AT WELDED SEAMS IN SHEET RUBBER/VINYL SHALL MATCH THE DARKER OF THE SHEET COLORS AT SEAMS THAT DIVIDE TWO COLORS UNO.
2. SHEET RUBBER/VINYL FLOORING MATERIALS ARE TO RECEIVE WELDING ROD AT SEAMS.
3. ALL FLOORING TRANSITIONS SHALL BE CENTERED UNDER THE DOOR IN THE CLOSED POSITION.
4. ALL FLOORING TO BE INSTALLED PERPENDICULAR TO ROOM WALLS UNLESS NOTED OTHERWISE.

D. TILE

1. ALL EXPOSED TILE EDGES AND OUTSIDE WALL TILE CORNERS TO RECEIVE METAL TRIM; UNO
2. ALL WALL TILE TO BE INSTALLED CENTERED ON THE WALL IN A MANNER THAT REQUIRES THE LEAST AMOUNT OF WASTE.
3. CONTRACTOR TO VERIFY ALL THICKNESSES OF WALL AND FLOOR TILE TRANSITIONS TO ENSURE THAT ADJACENT TILE TO TILE TRANSITIONS ARE FLUSH.

E. CONSULTANT COORDINATION

1. WHEN CEILINGS HAVE AN ACCENT MATERIAL OR PAINT. CEILING MOUNTED ITEMS TO BE COLORED TO MATCH CEILING FINISH. FOR EXAMPLE SPRINKLERS, SPEAKERS, DIFFUSERS, ETC. COORDINATE WITH INTERIOR DESIGNER.
2. IN WALLS WITH ACCENT MATERIAL OR FINISH - DIFFUSERS & GRILLES TO MATCH IN COLOR. COORDINATE WITH INTERIOR DESIGNER.

F. REFERENCE

1. REFERENCE AX SERIES DRAWINGS FOR FLOOR PATTERN, WALL PROTECTION LOCATIONS, & INTERIOR FINISH EXTENTS.
2. REFERENCE SHEET XX.XX FOR TYPES AND CONFIGURATIONS OF WALL PROTECTION.
3. REFERENCE MECHANICAL AND ELECTRICAL DRAWINGS FOR MOUNTING LOCATIONS OF ITEMS WHERE NO CEILING IS REQUIRED OR INDICATED.
4. REFERENCE SHEET XX.XX FOR TYPICAL FLOORING TRANSITION DETAILS.
5. REFERENCE XX.XX-XX.XX SERIES DRAWINGS FOR MILLWORK INFORMATION.
6. REFERENCE XX.XX - XX.XX SERIES DRAWINGS FOR INTERIOR SPECIALTY ELEVATIONS.
7. REFERENCE SHEET XX.XX FOR LOCKER FINISH INFORMATION.
8. REFERENCE XX SERIES DRAWINGS FOR ALL CEILING FINISHES AND ROLLER SHADE LOCATIONS.
9. REFERENCE XX.XX FOR EXPANSION JOINT COVER COLORS AND DETAILS. DESIGN INTENT TO MATCH JOINT COVER COLORS TO ADJACENT FINISH.

INTERIOR TYPICAL FINISHES

IPTXX	HOLLOW METAL FRAMES
IPTXX	INTERIOR HOLLOW METAL DOORS
XX	INTERIOR WOOD DOORS
IPTXX	EXPOSED DUCTWORK
IPTXX	EXPOSED STRUCTURE, ROOF DECK, AND MEP COMPONENTS (CEILING)
IPTXX	EXPOSED COLUMN & BRACING STRUCTURES
IPTXX	METAL PORTIONS OF STAIRS
XX	WINDOW SILLS
WHITE	ELECTRICAL DEVICE COVER PLATE COLOR

FINISH TAG LEGEND

ROOM NAME — STORAGE
ROOM NUMBER — 135
FLOOR — RSF01
BASE — RB01
WALLS — IPT01
WALL PROTECTION — WP01
REMARKS* — 1

IF MULTIPLE FINISHES EXIST WITHIN ROOM, FINISH IN TAG IS TYPICAL

*REMARKS NUMBERS COORDINATE WITH FINISH REMARKS LEGEND LOCATED ON ALL FINISH FLOOR PLAN SHEETS.

INTERIOR FINISH REMARKS

1. REFERENCE A9 SERIES FINISH PLAN FOR FLOORING FINISH LOCATIONS.
2. MULTIPLE WALL FINISHES, REFERENCE FINISH PLANS AND ELEVATIONS.

FINISH PLAN LEGEND

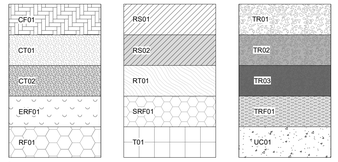

HKS

ARCHITECT
HKS ARCHITECTS, INC.
90 SOUTH 400 WEST, #110
SALT LAKE CITY, UTAH 84101

CIVIL ENGINEER
GREAT BASIN ENGINEERING, INC
5746 SOUTH 1475 EAST
OGDEN, UTAH 84403

LANDSCAPE ARCHITECT
MGB+A STUDIO
145 WEST 200 SOUTH
SALT LAKE CITY, UTAH 84101

STRUCTURAL ENGINEER
REAVELEY ENGINEERS
250 EAST 200 SOUTH, SUITE 1000
SALT LAKE CITY, UTAH 84111

M/P/FP ENGINEER
RESOLUT GROUP
181 EAST 5600 SOUTH, SUITE 200
MURRAY, UTAH 84107

E/T ENGINEER
LYNK ENGINEERS
324 SOUTH STATE STREET, SUITE 400
SALT LAKE CITY, UTAH 84111

Intermountain Health

UTAH VALLEY SPORTS PERFORMANCE CENTER

PROJECT ADDRESS: WEST 880 NORTH 200 WEST PROVO, UTAH 84604

SEAL & SIGNATURE

KEY PLAN

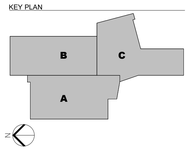

REVISION

NO.	DESCRIPTION	DATE

HKS PROJECT NUMBER
27487.000

DATE
08/26/2026

ISSUE
DESIGN DEVELOPMENT

SHEET TITLE
INTERIOR FINISH INFORMATION

SHEET NO.
A9.00

© 2026 HKS, INC.

TITLE BLOCK VERSION: 20210930
MODEL: Autodesk Docs://27487.000_IH_UV Sports Performance Center_2025/A_IH-UV_Sports-Performance-Center_2025.rvt
PRINT DATE: 8/26/2026 1:36:45 PM TEMPLATE VERSION: 23.0.6

GENERAL NOTES - FINISH PLAN

1. REFER TO A2 SERIES PLANS FOR GENERAL ARCHITECTURAL INFORMATION AND DIMENSIONS.
2. REFER TO A4 SERIES RCP PLANS FOR GENERAL CEILING AND LIGHTING INFORMATION.
3. A9 SERIES FINISH PLAN SHEETS CONTAIN THE FOLLOWING INFORMATION:
   A. FINISHES AND FINISH EXTENTS FOR EACH ROOM
   B. MILLWORK AND SPECIALTY INTERIOR ELEMENT INFORMATION
   C. WALL PROTECTION PLACEMENT INFORMATION
4. REFER TO SHEET A3.11 - A3.13 FOR MISCELLANEOUS METAL FABRICATION (MF) TYPES AND DETAILS.
5. REFER TO SHEET A3.22 FOR TYPICAL TOILET LAYOUTS AND TOILET ACCESSORY MOUNTING DIAGRAMS.
6. REFER TO SHEET A9.00 FOR FINISH INFORMATION AND SCHEDULES, WALL PROTECTION INFORMATION, AND FLOORING TRANSITIONS.
7. REFER TO SHEET A3.51 FOR CASEWORK DETAILS AND INFORMATION.
8. REFER TO SHEET A3.7 SERIES SHEETS FOR INTERIOR CASEWORK ELEVATIONS
9. REFER TO SHEET A3.25 FOR LOCKER INFORMATION.
10. REFER TO SHEET A3.04 FOR FRAMING AND MOUNTING DETAILS.
11. ASSUME CG02 ON ALL CLINICAL CORNERS

FINISH PLAN LEGEND

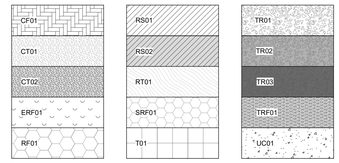

L CORNER GUARD

01 LEVEL 01 - OVERALL FINISH PLAN

1/16" = 1'-0"

HKS

ARCHITECT
HKS ARCHITECTS, INC.
90 SOUTH 400 WEST, #110
SALT LAKE CITY, UTAH 84101

CIVIL ENGINEER
GREAT BASIN ENGINEERING, INC
5746 SOUTH 1475 EAST
OGDEN, UTAH 84403

LANDSCAPE ARCHITECT
MGB+A STUDIO
145 WEST 200 SOUTH
SALT LAKE CITY, UTAH 84101

STRUCTURAL ENGINEER
REAVELEY ENGINEERS
250 EAST 200 SOUTH, SUITE 1000
SALT LAKE CITY, UTAH 84111

M/P/FP ENGINEER
RESOLUT GROUP
181 EAST 5600 SOUTH, SUITE 200
MURRAY, UTAH 84107

E/T ENGINEER
LYNK ENGINEERS
324 SOUTH STATE STREET, SUITE 400
SALT LAKE CITY, UTAH 84111

Intermountain Health

UTAH VALLEY SPORTS PERFORMANCE CENTER

PROJECT ADDRESS: WEST 880 NORTH 200 WEST PROVO, UTAH 84604

SEAL & SIGNATURE

KEY PLAN

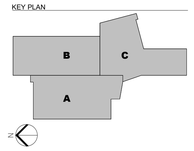

REVISION

NO.	DESCRIPTION	DATE

HKS PROJECT NUMBER
27487.000

DATE
08/26/2026

ISSUE
DESIGN DEVELOPMENT

SHEET TITLE
LEVEL 01 - OVERALL FINISH PLAN

SHEET NO.
A9.01

© 2026 HKS, INC.

TITLE BLOCK VERSION: 20210930
MODEL: Autodesk Docs://27487.000_IH - UV Sports Performance Center_2025/A_IH-UV_Sports-Performance-Center_2025.rvt
PRINT DATE: 8/28/2026 1:38:52 PM TEMPLATE VERSION: 23.0.6

GENERAL NOTES - FINISH PLAN

1. REFER TO A2 SERIES PLANS FOR GENERAL ARCHITECTURAL INFORMATION AND DIMENSIONS.
2. REFER TO A4 SERIES RCP PLANS FOR GENERAL CEILING AND LIGHTING INFORMATION.
3. A9 SERIES FINISH PLAN SHEETS CONTAIN THE FOLLOWING INFORMATION:
   A. FINISHES AND FINISH EXTENTS FOR EACH ROOM
   B. MILLWORK AND SPECIALTY INTERIOR ELEMENT INFORMATION
   C. WALL PROTECTION PLACEMENT INFORMATION
4. REFER TO SHEET A3.11 - A3.13 FOR MISCELLANEOUS METAL FABRICATION (MF) TYPES AND DETAILS.
5. REFER TO SHEET A3.22 FOR TYPICAL TOILET LAYOUTS AND TOILET ACCESSORY MOUNTING DIAGRAMS.
6. REFER TO SHEET A9.00 FOR FINISH INFORMATION AND SCHEDULES, WALL PROTECTION INFORMATION, AND FLOORING TRANSITIONS.
7. REFER TO SHEET A3.51 FOR CASEWORK DETAILS AND INFORMATION.
8. REFER TO SHEET A3.7 SERIES SHEETS FOR INTERIOR CASEWORK ELEVATIONS
9. REFER TO SHEET A3.25 FOR LOCKER INFORMATION.
10. REFER TO SHEET A3.04 FOR FRAMING AND MOUNTING DETAILS.
11. ASSUME CG02 ON ALL CLINICAL CORNERS

FINISH PLAN LEGEND

CF01	RS01	TR01
CT01	RS02	TR02
CT02	RT01	TR03
ERF01	SRF01	TRF01
RF01	T01	UC01

L CORNER GUARD

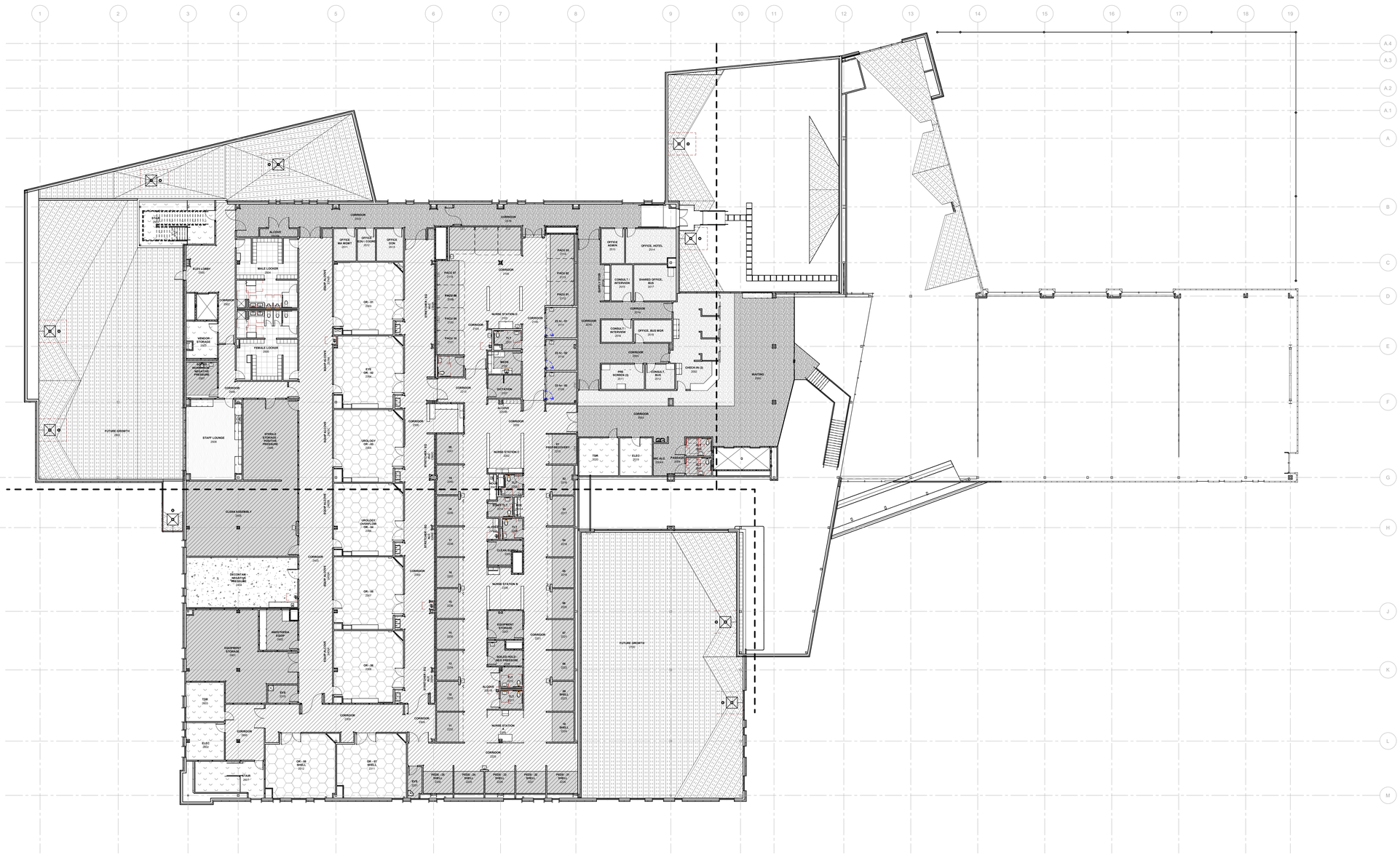

01 LEVEL 02 - OVERALL FINISH PLAN

1/16" = 1'-0"

HKS

ARCHITECT
HKS ARCHITECTS, INC.
90 SOUTH 400 WEST, #110
SALT LAKE CITY, UTAH 84101

CIVIL ENGINEER
GREAT BASIN ENGINEERING, INC
5746 SOUTH 1475 EAST
OGDEN, UTAH 84403

LANDSCAPE ARCHITECT
MGB+A STUDIO
145 WEST 200 SOUTH
SALT LAKE CITY, UTAH 84101

STRUCTURAL ENGINEER
REAVELEY ENGINEERS
250 EAST 200 SOUTH, SUITE 1000
SALT LAKE CITY, UTAH 84111

M/P/FP ENGINEER
RESOLUT GROUP
181 EAST 5600 SOUTH, SUITE 200
MURRAY, UTAH 84107

E/T ENGINEER
LYNK ENGINEERS
324 SOUTH STATE STREET, SUITE 400
SALT LAKE CITY, UTAH 84111

Intermountain Health

UTAH VALLEY SPORTS PERFORMANCE CENTER

PROJECT ADDRESS: WEST 880 NORTH 200 WEST PROVO, UTAH 84604

SEAL & SIGNATURE

KEY PLAN

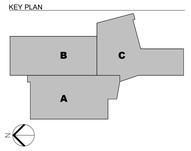

REVISION

NO.	DESCRIPTION	DATE

HKS PROJECT NUMBER
27487.000

DATE
08/26/2026

ISSUE
DESIGN DEVELOPMENT

SHEET TITLE
LEVEL 02 - OVERALL FINISH PLAN

SHEET NO.
A9.02

© 2026 HKS, INC.

TITLE BLOCK VERSION: 20210930
MODEL: Autodesk Docs://27487.000_IH - UV Sports Performance Center 2025/A_IH-UV Sports Performance Center_2025.rvt
PRINT DATE: 8/26/2026 1:36:56 PM TEMPLATE VERSION: 23.0.6

FINISH PLAN LEGEND

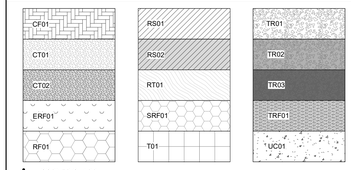

L CORNER GUARD

GENERAL NOTES - FINISH PLAN

1. REFER TO A2 SERIES PLANS FOR GENERAL ARCHITECTURAL INFORMATION AND DIMENSIONS.
2. REFER TO A4 SERIES RCP PLANS FOR GENERAL CEILING AND LIGHTING INFORMATION.
3. A9 SERIES FINISH PLAN SHEETS CONTAIN THE FOLLOWING INFORMATION:
   A. FINISHES AND FINISH EXTENTS FOR EACH ROOM
   B. MILLWORK AND SPECIALTY INTERIOR ELEMENT INFORMATION
   C. WALL PROTECTION PLACEMENT INFORMATION
4. REFER TO SHEET A3.11 - A3.13 FOR MISCELLANEOUS METAL FABRICATION (MF) TYPES AND DETAILS.
5. REFER TO SHEET A3.22 FOR TYPICAL TOILET LAYOUTS AND TOILET ACCESSORY MOUNTING DIAGRAMS.
6. REFER TO SHEET A9.00 FOR FINISH INFORMATION AND SCHEDULES, WALL PROTECTION INFORMATION, AND FLOORING TRANSITIONS.
7. REFER TO SHEET A3.51 FOR CASEWORK DETAILS AND INFORMATION.
8. REFER TO SHEET A3.7 SERIES SHEETS FOR INTERIOR CASEWORK ELEVATIONS
9. REFER TO SHEET A3.25 FOR LOCKER INFORMATION.
10. REFER TO SHEET A3.04 FOR FRAMING AND MOUNTING DETAILS.
11. ASSUME CG02 ON ALL CLINICAL CORNERS

FINISH TAG LEGEND

ROOM NAME → STORAGE
ROOM NUMBER → 135

FLOOR	RSF01
BASE	RB01
WALLS	IPT01
WALL PROTECTION	WP01
REMARKS*	1

IF MULTIPLE FINISHES EXIST WITHIN ROOM, FINISH IN TAG IS TYPICAL

*REMARKS NUMBERS COORDINATE WITH FINISH REMARKS LEGEND LOCATED ON ALL FINISH FLOOR PLAN SHEETS.

INTERIOR FINISH REMARKS

1. REFERENCE A9 SERIES FINISH PLAN FOR FLOORING FINISH LOCATIONS.
2. MULTIPLE WALL FINISHES, REFERENCE FINISH PLANS AND ELEVATIONS.

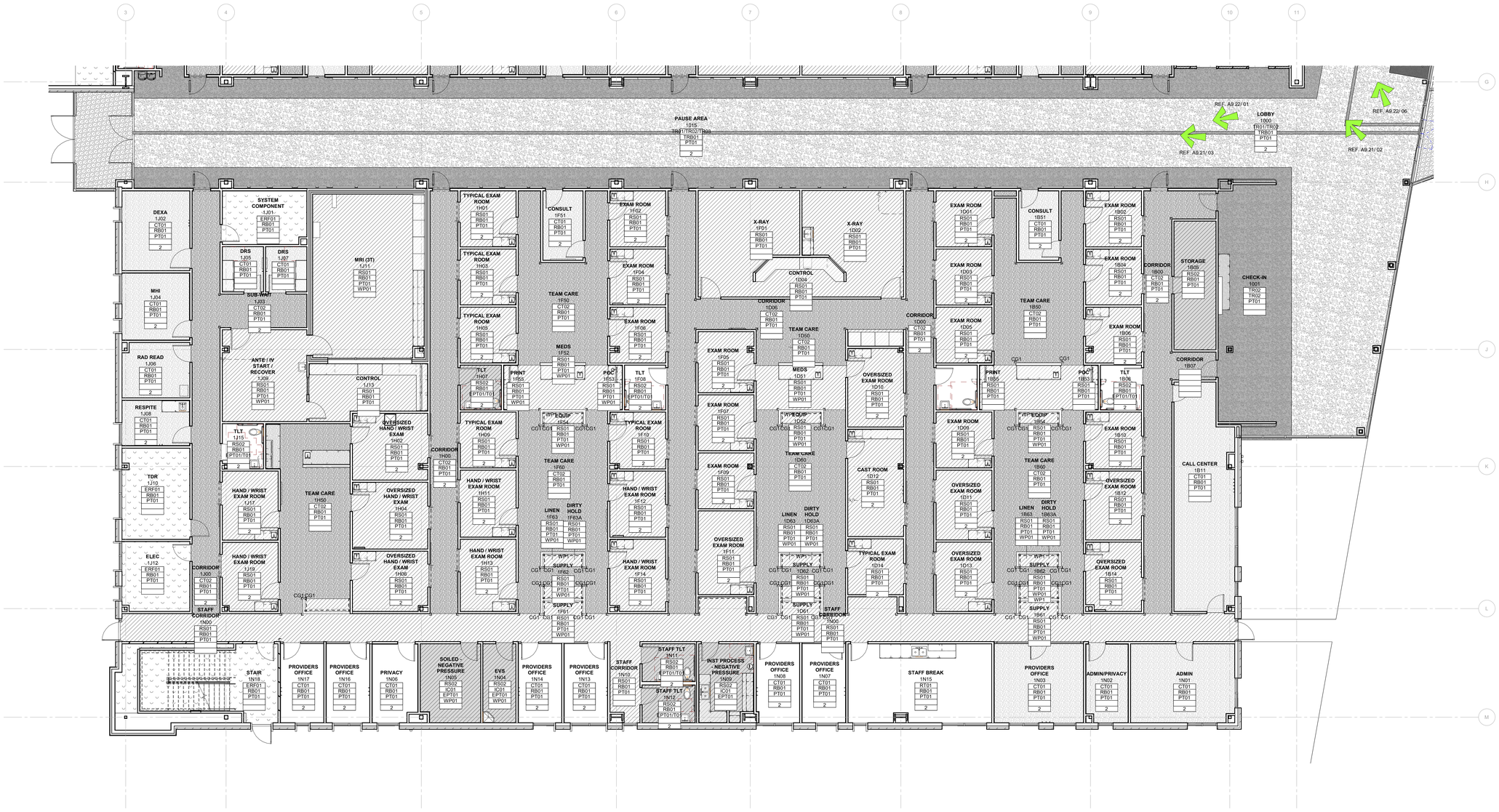

01 LEVEL 01 - FINISH PLAN - SECTOR A

1/8" = 1'-0"

HKS

ARCHITECT
HKS ARCHITECTS, INC.
90 SOUTH 400 WEST, #110
SALT LAKE CITY, UTAH 84101

CIVIL ENGINEER
GREAT BASIN ENGINEERING, INC
5746 SOUTH 1475 EAST
OGDEN, UTAH 84403

LANDSCAPE ARCHITECT
MGB+A STUDIO
145 WEST 200 SOUTH
SALT LAKE CITY, UTAH 84101

STRUCTURAL ENGINEER
REAVELEY ENGINEERS
250 EAST 200 SOUTH, SUITE 1000
SALT LAKE CITY, UTAH 84111

M/P/FP ENGINEER
RESOLUT GROUP
181 EAST 5600 SOUTH, SUITE 200
MURRAY, UTAH 84107

E/T ENGINEER
LYNK ENGINEERS
324 SOUTH STATE STREET, SUITE 400
SALT LAKE CITY, UTAH 84111

Intermountain Health

UTAH VALLEY SPORTS PERFORMANCE CENTER

PROJECT ADDRESS: WEST 880 NORTH 200 WEST PROVO, UTAH 84604

SEAL & SIGNATURE

KEY PLAN

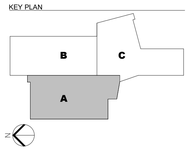

REVISION

NO.	DESCRIPTION	DATE

HKS PROJECT NUMBER
27487.000

DATE
08/26/2026

ISSUE
DESIGN DEVELOPMENT

SHEET TITLE
LEVEL 01 - FINISH PLAN - SECTOR A

SHEET NO.
A9.11A

© 2026 HKS, INC.

TITLE BLOCK VERSION: 20210930
PRINT DATE: 8/26/2026 1:37:03 PM TEMPLATE VERSION: 23.0.6 MODEL: Autodesk Docs://27487.000 IH - UV Sports Performance Center 2025/A_IHUV_Sports-Performance-Center_2025.rvt

FINISH PLAN LEGEND

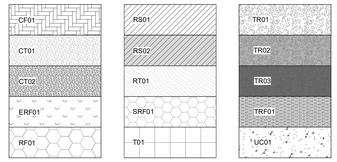

CORNER GUARD

GENERAL NOTES - FINISH PLAN

1. REFER TO A2 SERIES PLANS FOR GENERAL ARCHITECTURAL INFORMATION AND DIMENSIONS.
2. REFER TO A4 SERIES RCP PLANS FOR GENERAL CEILING AND LIGHTING INFORMATION.
3. A9 SERIES FINISH PLAN SHEETS CONTAIN THE FOLLOWING INFORMATION:
   A. FINISHES AND FINISH EXTENTS FOR EACH ROOM
   B. MILLWORK AND SPECIALTY INTERIOR ELEMENT INFORMATION
   C. WALL PROTECTION PLACEMENT INFORMATION
4. REFER TO SHEET A3.11 - A3.13 FOR MISCELLANEOUS METAL FABRICATION (MF) TYPES AND DETAILS.
5. REFER TO SHEET A3.22 FOR TYPICAL TOILET LAYOUTS AND TOILET ACCESSORY MOUNTING DIAGRAMS.
6. REFER TO SHEET A9.00 FOR FINISH INFORMATION AND SCHEDULES, WALL PROTECTION INFORMATION, AND FLOORING TRANSITIONS.
7. REFER TO SHEET A3.51 FOR CASEWORK DETAILS AND INFORMATION.
8. REFER TO SHEET A3.7 SERIES SHEETS FOR INTERIOR CASEWORK ELEVATIONS
9. REFER TO SHEET A3.25 FOR LOCKER INFORMATION.
10. REFER TO SHEET A3.04 FOR FRAMING AND MOUNTING DETAILS.
11. ASSUME CG02 ON ALL CLINICAL CORNERS

FINISH TAG LEGEND

ROOM NAME	STORAGE	
ROOM NUMBER	135	
FLOOR	RSF01	IF MULTIPLE FINISHES EXIST WITHIN ROOM, FINISH IN TAG IS TYPICAL
BASE	RB01	
WALLS	IPT01	
WALL PROTECTION	WP01	
REMARKS*	1	

*REMARKS NUMBERS COORDINATE WITH FINISH REMARKS LEGEND LOCATED ON ALL FINISH FLOOR PLAN SHEETS.

INTERIOR FINISH REMARKS

1. REFERENCE A9 SERIES FINISH PLAN FOR FLOORING FINISH LOCATIONS.
2. MULTIPLE WALL FINISHES, REFERENCE FINISH PLANS AND ELEVATIONS.

01 LEVEL 01 - FINISH PLAN - SECTOR B

1/8" = 1'-0"

© 2026 HKS, INC.

HKS

ARCHITECT
HKS ARCHITECTS, INC.
90 SOUTH 400 WEST, #110
SALT LAKE CITY, UTAH 84101

CIVIL ENGINEER
GREAT BASIN ENGINEERING, INC
5746 SOUTH 1475 EAST
OGDEN, UTAH 84403

LANDSCAPE ARCHITECT
MGB+A STUDIO
145 WEST 200 SOUTH
SALT LAKE CITY, UTAH 84101

STRUCTURAL ENGINEER
REAVELEY ENGINEERS
250 EAST 200 SOUTH, SUITE 1000
SALT LAKE CITY, UTAH 84111

M/P/FP ENGINEER
RESOLUT GROUP
181 EAST 5600 SOUTH, SUITE 200
MURRAY, UTAH 84107

E/T ENGINEER
LYNK ENGINEERS
324 SOUTH STATE STREET, SUITE 400
SALT LAKE CITY, UTAH 84111

Intermountain Health

UTAH VALLEY SPORTS PERFORMANCE CENTER

PROJECT ADDRESS: WEST 880 NORTH 200 WEST PROVO, UTAH 84604

SEAL & SIGNATURE

KEY PLAN

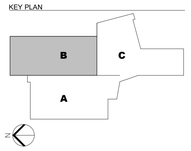

REVISION

NO.	DESCRIPTION	DATE

HKS PROJECT NUMBER
27487.000

DATE
08/26/2026

ISSUE
DESIGN DEVELOPMENT

SHEET TITLE
LEVEL 01 - FINISH PLAN - SECTOR B

SHEET NO.
A9.11B

TITLE BLOCK VERSION: 20251630
MODEL: Autodesk Docs://27487.000_H_UV Sports Performance Center_2025/A_H-UV_Sports-Performance-Center_2025.rvt
PRINT DATE: 8/26/2026 1:37:10 PM TEMPLATE VERSION: 23.0.6

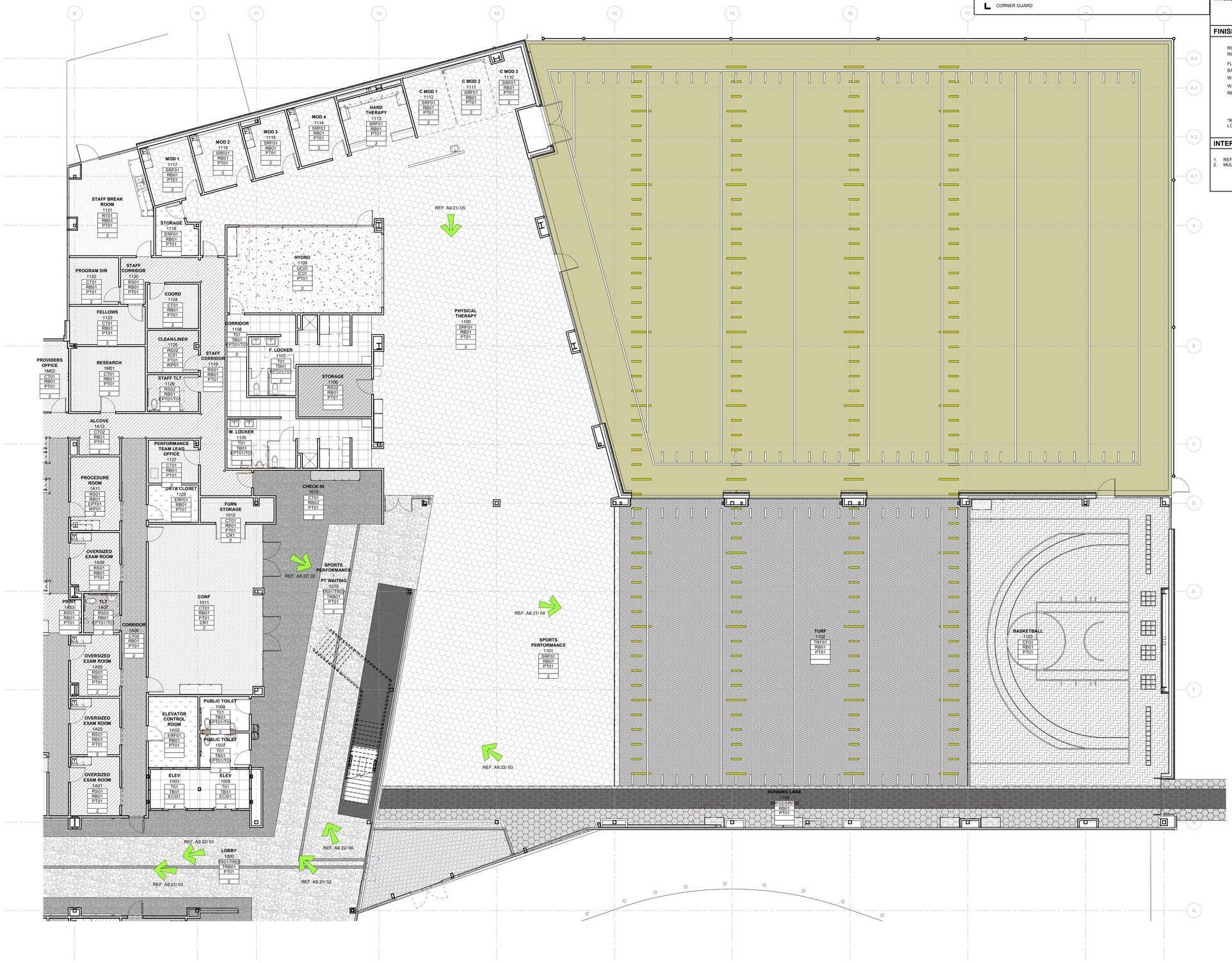

01 LEVEL 01 - FINISH PLAN - SECTOR C

1/8" = 1'-0"

FINISH PLAN LEGEND

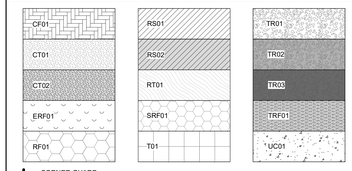

GENERAL NOTES - FINISH PLAN

1. REFER TO A2 SERIES PLANS FOR GENERAL ARCHITECTURAL INFORMATION AND DIMENSIONS.
2. REFER TO A4 SERIES RCP PLANS FOR GENERAL CEILING AND LIGHTING INFORMATION.
3. A9 SERIES FINISH PLAN SHEETS CONTAIN THE FOLLOWING INFORMATION:
   A. FINISHES AND FINISH EXTENTS FOR EACH ROOM
   B. MILLWORK AND SPECIALTY INTERIOR ELEMENT INFORMATION
   C. WALL PROTECTION PLACEMENT INFORMATION
4. REFER TO SHEET A3.11 - A3.13 FOR MISCELLANEOUS METAL FABRICATION (MF) TYPES AND DETAILS.
5. REFER TO SHEET A3.22 FOR TYPICAL TOILET LAYOUTS AND TOILET ACCESSORY MOUNTING DIAGRAMS.
6. REFER TO SHEET A9.00 FOR FINISH INFORMATION AND SCHEDULES, WALL PROTECTION INFORMATION, AND FLOORING TRANSITIONS.
7. REFER TO SHEET A3.51 FOR CASEWORK DETAILS AND INFORMATION.
8. REFER TO SHEET A3.7 SERIES SHEETS FOR INTERIOR CASEWORK ELEVATIONS
9. REFER TO SHEET A3.25 FOR LOCKER INFORMATION.
10. REFER TO SHEET A3.04 FOR FRAMING AND MOUNTING DETAILS.
11. ASSUME CG02 ON ALL CLINICAL CORNERS

FINISH TAG LEGEND

ROOM NAME → STORAGE
ROOM NUMBER → 135

FLOOR	RSF01
BASE	RB01
WALLS	IPT01
WALL PROTECTION	WP01
REMARKS*	1

IF MULTIPLE FINISHES EXIST WITHIN ROOM, FINISH IN TAG IS TYPICAL

*REMARKS NUMBERS COORDINATE WITH FINISH REMARKS LEGEND LOCATED ON ALL FINISH FLOOR PLAN SHEETS.

INTERIOR FINISH REMARKS

1. REFERENCE A9 SERIES FINISH PLAN FOR FLOORING FINISH LOCATIONS.
2. MULTIPLE WALL FINISHES, REFERENCE FINISH PLANS AND ELEVATIONS.

HKS

ARCHITECT
HKS ARCHITECTS, INC.
90 SOUTH 400 WEST, #110
SALT LAKE CITY, UTAH 84101

CIVIL ENGINEER
GREAT BASIN ENGINEERING, INC
5746 SOUTH 1475 EAST
OGDEN, UTAH 84403

LANDSCAPE ARCHITECT
MGB+A STUDIO
145 WEST 200 SOUTH
SALT LAKE CITY, UTAH 84101

STRUCTURAL ENGINEER
REAVELEY ENGINEERS
250 EAST 200 SOUTH, SUITE 1000
SALT LAKE CITY, UTAH 84111

M/P/FP ENGINEER
RESOLUT GROUP
181 EAST 5600 SOUTH, SUITE 200
MURRAY, UTAH 84107

E/T ENGINEER
LYNK ENGINEERS
324 SOUTH STATE STREET, SUITE 400
SALT LAKE CITY, UTAH 84111

Intermountain Health

UTAH VALLEY SPORTS PERFORMANCE CENTER

PROJECT ADDRESS: WEST 880 NORTH 200 WEST PROVO, UTAH 84604

SEAL & SIGNATURE

KEY PLAN

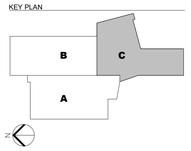

REVISION

NO.	DESCRIPTION	DATE

HKS PROJECT NUMBER
27487.000

DATE
08/26/2026

ISSUE
DESIGN DEVELOPMENT

SHEET TITLE
LEVEL 01 - FINISH PLAN - SECTOR C

SHEET NO.
A9.11C

© 2026 HKS, INC.

TITLE BLOCK VERSION: 20210930
MODEL: Autodesk Docs://27487.000 IH - UV Sports Performance Center /2025A IhUV Sports Performance Center 2025.rvt
PRINT DATE: 8/26/2026 1:37:18 PM TEMPLATE VERSION: 23.0.6

FINISH PLAN LEGEND

CF01	RS01	TR01
CT01	RS02	TR02
CT02	RT01	TR03
ERF01	SRF01	TRF01
RF01	T01	UC01

L CORNER GUARD

GENERAL NOTES - FINISH PLAN

1. REFER TO A2 SERIES PLANS FOR GENERAL ARCHITECTURAL INFORMATION AND DIMENSIONS.
2. REFER TO A4 SERIES RCP PLANS FOR GENERAL CEILING AND LIGHTING INFORMATION.
3. A9 SERIES FINISH PLAN SHEETS CONTAIN THE FOLLOWING INFORMATION:
   A. FINISHES AND FINISH EXTENTS FOR EACH ROOM
   B. MILLWORK AND SPECIALTY INTERIOR ELEMENT INFORMATION
   C. WALL PROTECTION PLACEMENT INFORMATION
4. REFER TO SHEET A3.11 - A3.13 FOR MISCELLANEOUS METAL FABRICATION (MF) TYPES AND DETAILS.
5. REFER TO SHEET A3.22 FOR TYPICAL TOILET LAYOUTS AND TOILET ACCESSORY MOUNTING DIAGRAMS.
6. REFER TO SHEET A9.00 FOR FINISH INFORMATION AND SCHEDULES, WALL PROTECTION INFORMATION, AND FLOORING TRANSITIONS.
7. REFER TO SHEET A3.51 FOR CASEWORK DETAILS AND INFORMATION.
8. REFER TO SHEET A3.7 SERIES SHEETS FOR INTERIOR CASEWORK ELEVATIONS
9. REFER TO SHEET A3.25 FOR LOCKER INFORMATION.
10. REFER TO SHEET A3.04 FOR FRAMING AND MOUNTING DETAILS.
11. ASSUME CG02 ON ALL CLINICAL CORNERS

FINISH TAG LEGEND

ROOM NAME → STORAGE
ROOM NUMBER → 135

FLOOR	RSF01
BASE	RB01
WALLS	IPT01
WALL PROTECTION	WP01
REMARKS*	1

IF MULTIPLE FINISHES EXIST WITHIN ROOM, FINISH IN TAG IS TYPICAL

*REMARKS NUMBERS COORDINATE WITH FINISH REMARKS LEGEND LOCATED ON ALL FINISH FLOOR PLAN SHEETS.

INTERIOR FINISH REMARKS

1. REFERENCE A9 SERIES FINISH PLAN FOR FLOORING FINISH LOCATIONS.
2. MULTIPLE WALL FINISHES, REFERENCE FINISH PLANS AND ELEVATIONS.

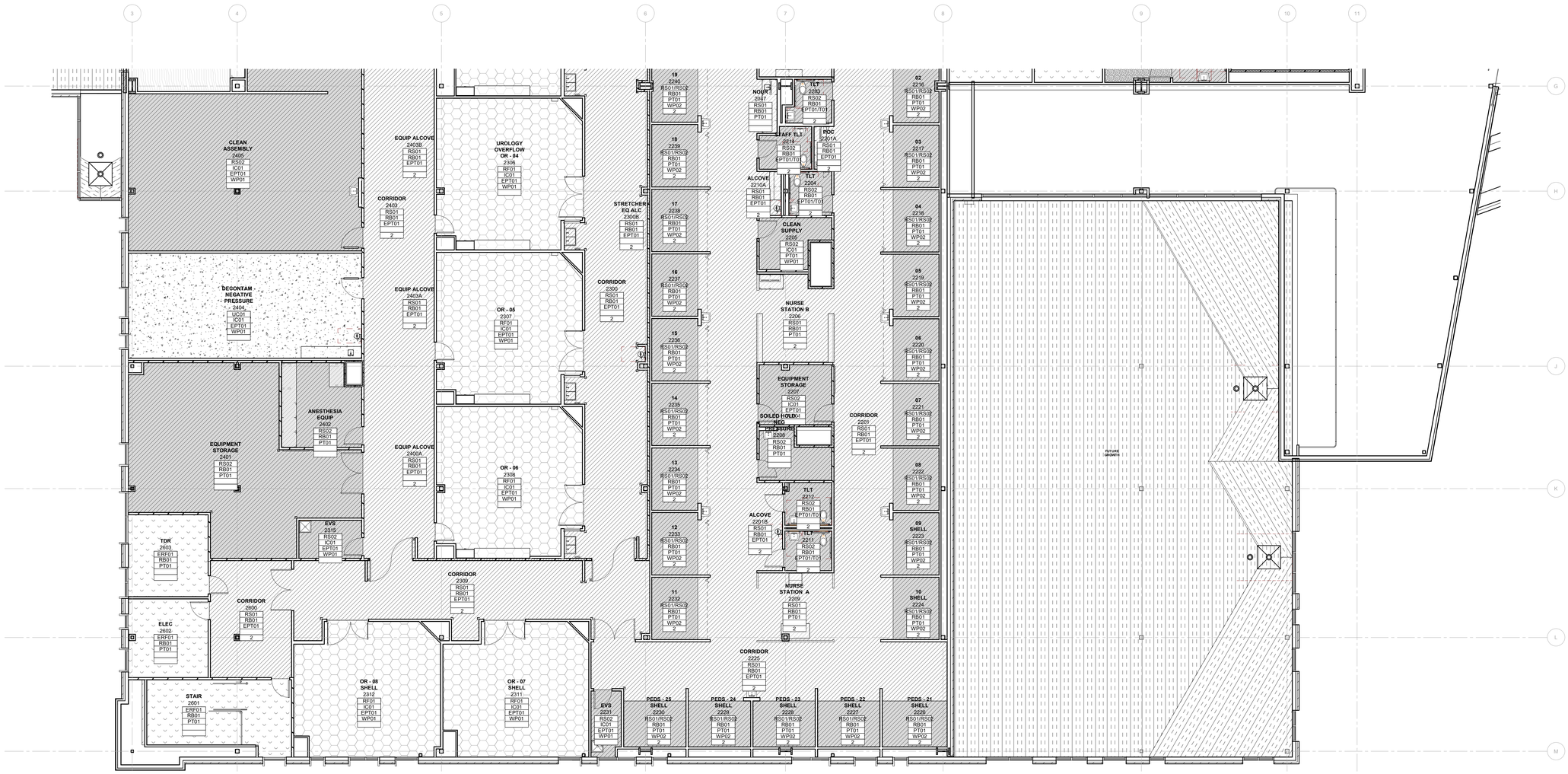

01 LEVEL 02 - FINISH PLAN - SECTOR A
1/8" = 1'-0"

© 2026 HKS, INC.

HKS

ARCHITECT
HKS ARCHITECTS, INC.
90 SOUTH 400 WEST, #110
SALT LAKE CITY, UTAH 84101

CIVIL ENGINEER
GREAT BASIN ENGINEERING, INC
5746 SOUTH 1475 EAST
OGDEN, UTAH 84403

LANDSCAPE ARCHITECT
MGB+A STUDIO
145 WEST 200 SOUTH
SALT LAKE CITY, UTAH 84101

STRUCTURAL ENGINEER
REAVELEY ENGINEERS
250 EAST 200 SOUTH, SUITE 1000
SALT LAKE CITY, UTAH 84111

M/P/FP ENGINEER
RESOLUT GROUP
181 EAST 5600 SOUTH, SUITE 200
MURRAY, UTAH 84107

E/T ENGINEER
LYNK ENGINEERS
324 SOUTH STATE STREET, SUITE 400
SALT LAKE CITY, UTAH 84111

Intermountain Health

UTAH VALLEY SPORTS PERFORMANCE CENTER

PROJECT ADDRESS: WEST 880 NORTH 200 WEST PROVO, UTAH 84604

SEAL & SIGNATURE

KEY PLAN

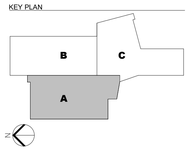

REVISION

NO.	DESCRIPTION	DATE

HKS PROJECT NUMBER
27487.000

DATE
08/26/2026

ISSUE
DESIGN DEVELOPMENT

SHEET TITLE
LEVEL 02 - FINISH PLAN - SECTOR A

SHEET NO.
A9.12A

TITLE BLOCK VERSION: 20251630
MODEL: Autodesk Docs://27487.000_H_UV Sports Performance Center_2025.rvt
PRINT DATE: 8/26/2026 1:37:20 PM TEMPLATE VERSION: 23.0.6

FINISH PLAN LEGEND

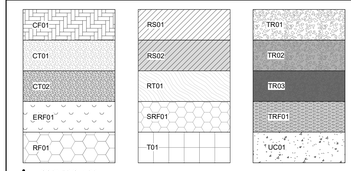

CORNER GUARD

GENERAL NOTES - FINISH PLAN

1. REFER TO A2 SERIES PLANS FOR GENERAL ARCHITECTURAL INFORMATION AND DIMENSIONS.
2. REFER TO A4 SERIES RCP PLANS FOR GENERAL CEILING AND LIGHTING INFORMATION.
3. A9 SERIES FINISH PLAN SHEETS CONTAIN THE FOLLOWING INFORMATION:
   A. FINISHES AND FINISH EXTENTS FOR EACH ROOM
   B. MILLWORK AND SPECIALTY INTERIOR ELEMENT INFORMATION
   C. WALL PROTECTION PLACEMENT INFORMATION
4. REFER TO SHEET A3.11 - A3.13 FOR MISCELLANEOUS METAL FABRICATION (MF) TYPES AND DETAILS.
5. REFER TO SHEET A3.22 FOR TYPICAL TOILET LAYOUTS AND TOILET ACCESSORY MOUNTING DIAGRAMS.
6. REFER TO SHEET A9.00 FOR FINISH INFORMATION AND SCHEDULES, WALL PROTECTION INFORMATION, AND FLOORING TRANSITIONS.
7. REFER TO SHEET A3.51 FOR CASEWORK DETAILS AND INFORMATION.
8. REFER TO SHEET A3.7 SERIES SHEETS FOR INTERIOR CASEWORK ELEVATIONS
9. REFER TO SHEET A3.25 FOR LOCKER INFORMATION.
10. REFER TO SHEET A3.04 FOR FRAMING AND MOUNTING DETAILS.
11. ASSUME CG02 ON ALL CLINICAL CORNERS

FINISH TAG LEGEND

ROOM NAME	STORAGE
ROOM NUMBER	135
FLOOR	RSF01
BASE	RB01
WALLS	IPT01
WALL PROTECTION	WP01
REMARKS*	1

IF MULTIPLE FINISHES EXIST WITHIN ROOM, FINISH IN TAG IS TYPICAL

*REMARKS NUMBERS COORDINATE WITH FINISH REMARKS LEGEND LOCATED ON ALL FINISH FLOOR PLAN SHEETS.

INTERIOR FINISH REMARKS

1. REFERENCE A9 SERIES FINISH PLAN FOR FLOORING FINISH LOCATIONS.
2. MULTIPLE WALL FINISHES, REFERENCE FINISH PLANS AND ELEVATIONS.

01 LEVEL 02 - FINISH PLAN - SECTOR B

1/8" = 1'-0"

HKS

ARCHITECT
HKS ARCHITECTS, INC.
90 SOUTH 400 WEST, #110
SALT LAKE CITY, UTAH 84101

CIVIL ENGINEER
GREAT BASIN ENGINEERING, INC
5746 SOUTH 1475 EAST
OGDEN, UTAH 84403

LANDSCAPE ARCHITECT
MGB+A STUDIO
145 WEST 200 SOUTH
SALT LAKE CITY, UTAH 84101

STRUCTURAL ENGINEER
REAVELEY ENGINEERS
250 EAST 200 SOUTH, SUITE 1000
SALT LAKE CITY, UTAH 84111

M/P/FP ENGINEER
RESOLUT GROUP
181 EAST 5600 SOUTH, SUITE 200
MURRAY, UTAH 84107

E/T ENGINEER
LYNK ENGINEERS
324 SOUTH STATE STREET, SUITE 400
SALT LAKE CITY, UTAH 84111

Intermountain Health

UTAH VALLEY SPORTS PERFORMANCE CENTER

PROJECT ADDRESS: WEST 880 NORTH 200 WEST PROVO, UTAH 84604

SEAL & SIGNATURE

KEY PLAN

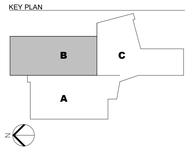

REVISION

NO.	DESCRIPTION	DATE

HKS PROJECT NUMBER
27487.000

DATE
08/26/2026

ISSUE
DESIGN DEVELOPMENT

SHEET TITLE
LEVEL 02 - FINISH PLAN - SECTOR B

SHEET NO.
A9.12B

© 2026 HKS, INC.

TITLE BLOCK VERSION: 20210930
PRINT DATE: 8/26/2026 1:37:24 PM TEMPLATE VERSION: 23.0.6 MODEL: Autodesk Docs://27487.000_IH_UV Sports Performance Center_2025/A_IH-UV_Sports Performance Center_2025.rvt

TITLE BLOCK VERSION: 20210930
MODEL: Autodesk Docs://27487.000_B1-UV Sports Performance Center_2025/A_HHUV_Sports Performance Center_2025.rvt
TEMPLATE VERSION: 23.0.6
PRINT DATE: 8/26/2026 1:37:26 PM

FINISH PLAN LEGEND

CF01	RS01	TR01
CT01	RS02	TR02
CT02	RT01	TR03
ERF01	SRF01	TRF01
RF01	T01	UC01

L CORNER GUARD

GENERAL NOTES - FINISH PLAN

1. REFER TO A2 SERIES PLANS FOR GENERAL ARCHITECTURAL INFORMATION AND DIMENSIONS.
2. REFER TO A4 SERIES RCP PLANS FOR GENERAL CEILING AND LIGHTING INFORMATION.
3. A9 SERIES FINISH PLAN SHEETS CONTAIN THE FOLLOWING INFORMATION:
   A. FINISHES AND FINISH EXTENTS FOR EACH ROOM
   B. MILLWORK AND SPECIALTY INTERIOR ELEMENT INFORMATION
   C. WALL PROTECTION PLACEMENT INFORMATION
4. REFER TO SHEET A3.11 - A3.13 FOR MISCELLANEOUS METAL FABRICATION (MF) TYPES AND DETAILS.
5. REFER TO SHEET A3.22 FOR TYPICAL TOILET LAYOUTS AND TOILET ACCESSORY MOUNTING DIAGRAMS.
6. REFER TO SHEET A9.00 FOR FINISH INFORMATION AND SCHEDULES, WALL PROTECTION INFORMATION, AND FLOORING TRANSITIONS.
7. REFER TO SHEET A3.51 FOR CASEWORK DETAILS AND INFORMATION.
8. REFER TO SHEET A3.7 SERIES SHEETS FOR INTERIOR CASEWORK ELEVATIONS
9. REFER TO SHEET A3.25 FOR LOCKER INFORMATION.
10. REFER TO SHEET A3.04 FOR FRAMING AND MOUNTING DETAILS.
11. ASSUME CG02 ON ALL CLINICAL CORNERS

FINISH TAG LEGEND

ROOM NAME → STORAGE
ROOM NUMBER → 135

FLOOR	RSF01
BASE	RB01
WALLS	IPT01
WALL PROTECTION	WP01
REMARKS*	1

IF MULTIPLE FINISHES EXIST WITHIN ROOM, FINISH IN TAG IS TYPICAL

*REMARKS NUMBERS COORDINATE WITH FINISH REMARKS LEGEND LOCATED ON ALL FINISH FLOOR PLAN SHEETS.

INTERIOR FINISH REMARKS

1. REFERENCE A9 SERIES FINISH PLAN FOR FLOORING FINISH LOCATIONS.
2. MULTIPLE WALL FINISHES, REFERENCE FINISH PLANS AND ELEVATIONS.

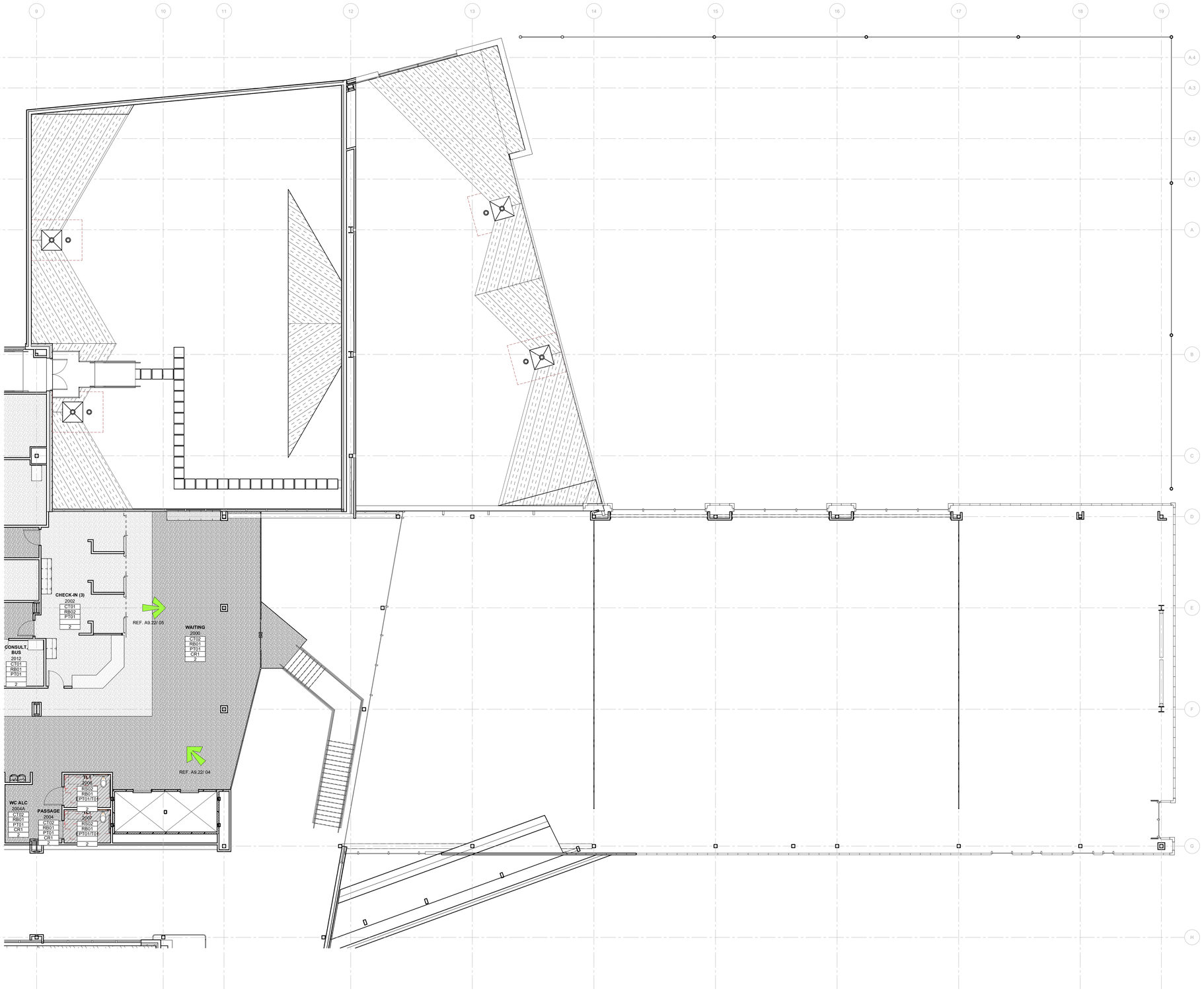

01 LEVEL 02 - FINISH PLAN - SECTOR C
1/8" = 1'-0"

© 2026 HKS, INC.

HKS

ARCHITECT
HKS ARCHITECTS, INC.
90 SOUTH 400 WEST, #110
SALT LAKE CITY, UTAH 84101

CIVIL ENGINEER
GREAT BASIN ENGINEERING, INC
5746 SOUTH 1475 EAST
OGDEN, UTAH 84403

LANDSCAPE ARCHITECT
MGB+A STUDIO
145 WEST 200 SOUTH
SALT LAKE CITY, UTAH 84101

STRUCTURAL ENGINEER
REAVELEY ENGINEERS
250 EAST 200 SOUTH, SUITE 1000
SALT LAKE CITY, UTAH 84111

M/P/FP ENGINEER
RESOLUT GROUP
181 EAST 5600 SOUTH, SUITE 200
MURRAY, UTAH 84107

E/T ENGINEER
LYNK ENGINEERS
324 SOUTH STATE STREET, SUITE 400
SALT LAKE CITY, UTAH 84111

Intermountain Health

UTAH VALLEY SPORTS PERFORMANCE CENTER

PROJECT ADDRESS: WEST 880 NORTH 200 WEST PROVO, UTAH 84604

SEAL & SIGNATURE

KEY PLAN

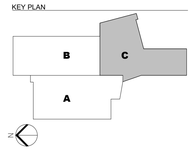

REVISION

NO.	DESCRIPTION	DATE

HKS PROJECT NUMBER
27487.000

DATE
08/26/2026

ISSUE
DESIGN DEVELOPMENT

SHEET TITLE
LEVEL 02 - FINISH PLAN - SECTOR C

SHEET NO.
A9.12C

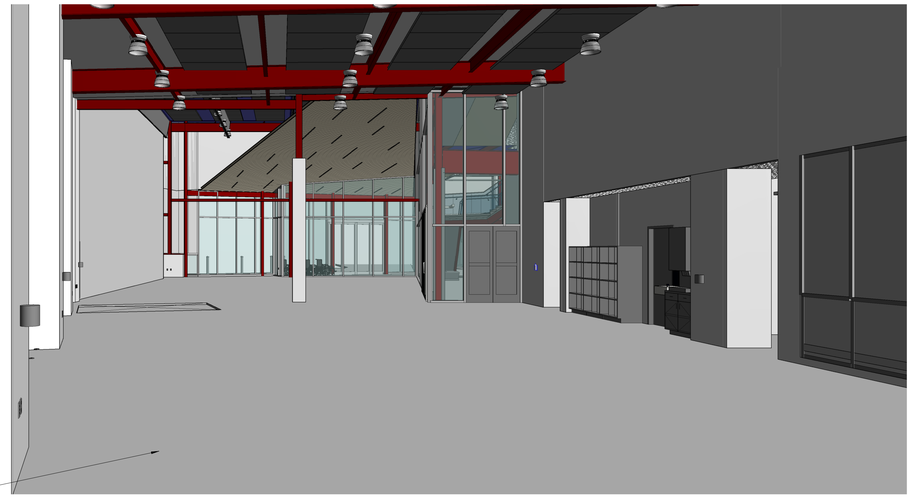

05 PHYSICAL THERAPY

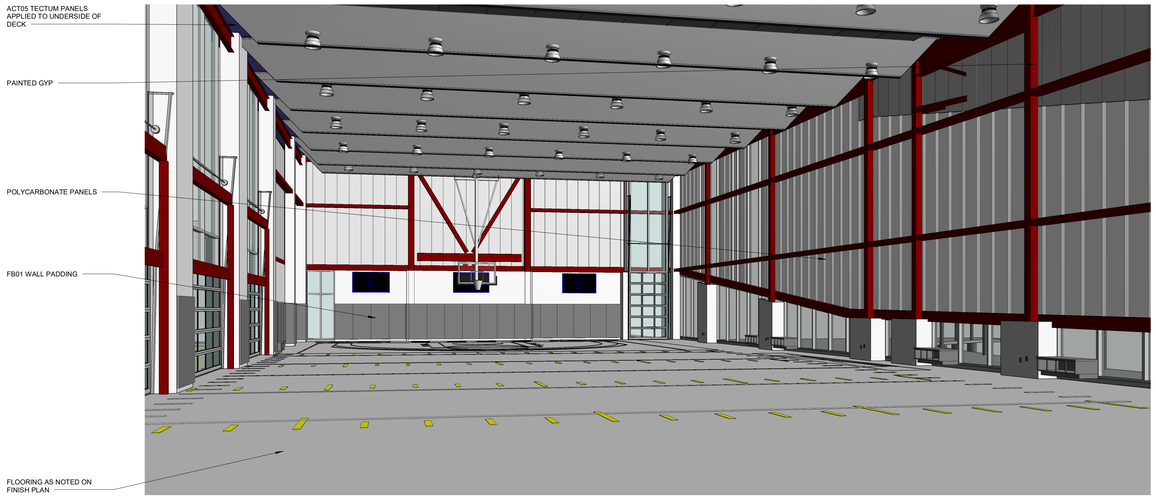

04 SPORTS PERFORMANCE
NTS

03 PAUSE AREA
NTS

02 MAIN LOBBY
NTS

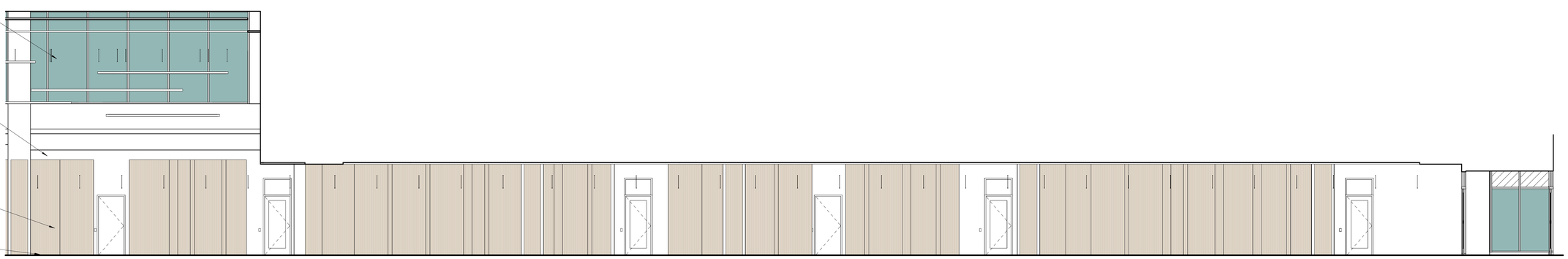

01 ELEV - PAUSE - SOUTH
3/16" = 1'-0"

HKS

ARCHITECT
HKS ARCHITECTS, INC.
90 SOUTH 400 WEST, #110
SALT LAKE CITY, UTAH 84101

CIVIL ENGINEER
GREAT BASIN ENGINEERING, INC
5746 SOUTH 1475 EAST
OGDEN, UTAH 84403

LANDSCAPE ARCHITECT
MGB+A STUDIO
145 WEST 200 SOUTH
SALT LAKE CITY, UTAH 84101

STRUCTURAL ENGINEER
REAVELEY ENGINEERS
250 EAST 200 SOUTH, SUITE 1000
SALT LAKE CITY, UTAH 84111

M/P/FP ENGINEER
RESOLUT GROUP
181 EAST 5600 SOUTH, SUITE 200
MURRAY, UTAH 84107

E/T ENGINEER
LYNK ENGINEERS
324 SOUTH STATE STREET, SUITE 400
SALT LAKE CITY, UTAH 84111

Intermountain Health

UTAH VALLEY SPORTS PERFORMANCE CENTER

PROJECT ADDRESS: WEST 880 NORTH 200 WEST PROVO, UTAH 84604

SEAL & SIGNATURE

KEY PLAN

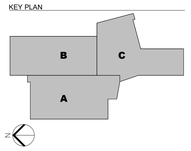

REVISION

NO.	DESCRIPTION	DATE

HKS PROJECT NUMBER
27487.000

DATE
08/26/2026

ISSUE
DESIGN DEVELOPMENT

SHEET TITLE
SPECIALTY INTERIOR ELEMENTS

SHEET NO.
A9.21

© 2026 HKS, INC.

TITLE BLOCK VERSION: 20210930
PRINT DATE: 8/26/2026 1:37:39 PM TEMPLATE VERSION: 23.0.6 MODEL: Autodesk Docs://27487.000_IH_UV Sports Performance Center_2025/A_IH-UV_Sports Performance Center_2025.rvt

TITLE BLOCK VERSION: 20210930

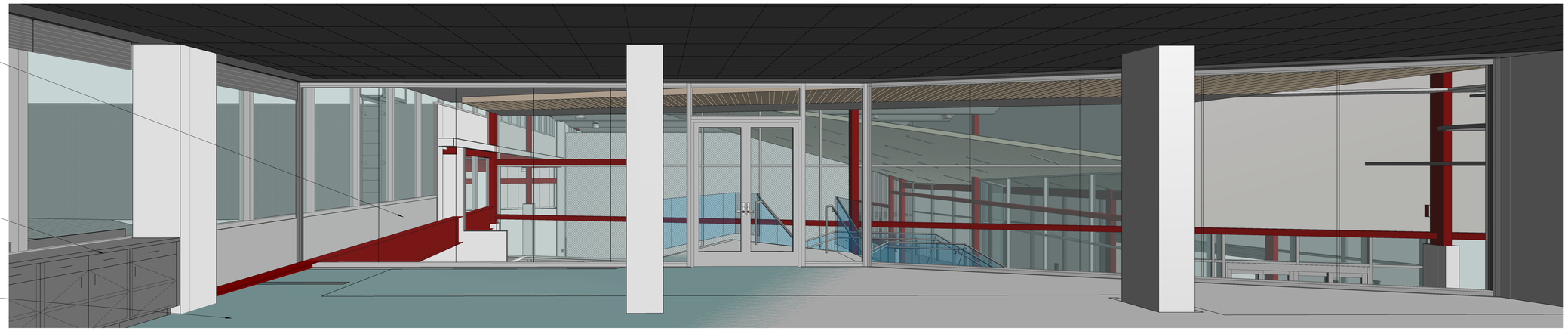

05 LEVEL 2 WAITING

04 LEVEL 2 WAITING

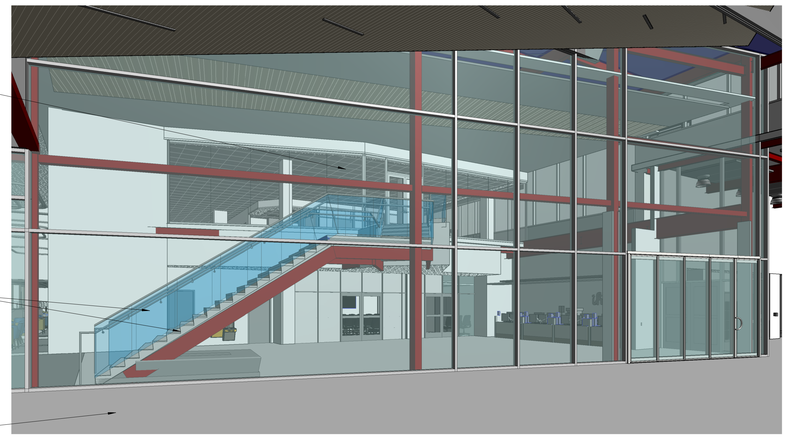

03 SPORTS PERFORMANCE TOWARD PT WAIT

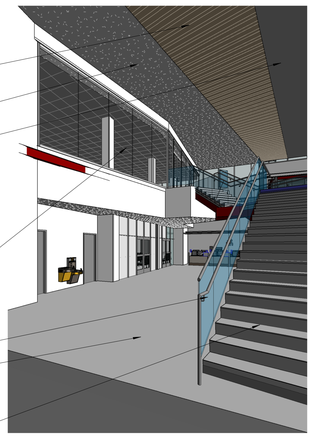

06 L1 LOBBY LOOKING UP TO L2 WAIT

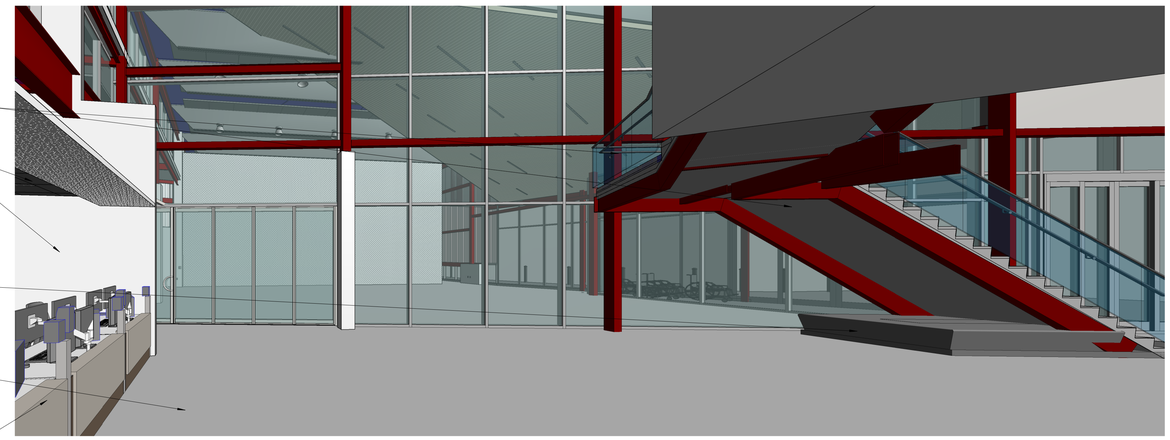

02 PT WAITING

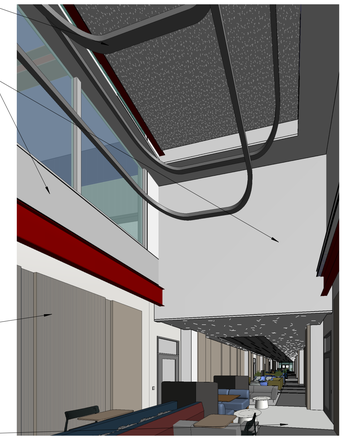

01 PAUSE AREA

© 2026 HKS, INC.

MODEL: Autodesk Docs://27487.000 IH - UV Sports Performance Center /2025/A_IHUV_Sports-Performance-Center_2025.rvt
PRINT DATE: 8/26/2026 1:38:01 PM TEMPLATE VERSION: 23.0.6

HKS

ARCHITECT
HKS ARCHITECTS, INC.
90 SOUTH 400 WEST, #110
SALT LAKE CITY, UTAH 84101

CIVIL ENGINEER
GREAT BASIN ENGINEERING, INC
5746 SOUTH 1475 EAST
OGDEN, UTAH 84403

LANDSCAPE ARCHITECT
MGB+A STUDIO
145 WEST 200 SOUTH
SALT LAKE CITY, UTAH 84101

STRUCTURAL ENGINEER
REAVELEY ENGINEERS
250 EAST 200 SOUTH, SUITE 1000
SALT LAKE CITY, UTAH 84111

M/P/FP ENGINEER
RESOLUT GROUP
181 EAST 5600 SOUTH, SUITE 200
MURRAY, UTAH 84107

E/T ENGINEER
LYNK ENGINEERS
324 SOUTH STATE STREET, SUITE 400
SALT LAKE CITY, UTAH 84111

Intermountain Health

UTAH VALLEY SPORTS PERFORMANCE CENTER

PROJECT ADDRESS: WEST 880 NORTH 200 WEST PROVO, UTAH 84604

SEAL & SIGNATURE

KEY PLAN

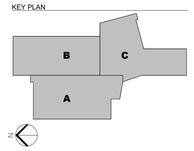

REVISION

NO.	DESCRIPTION	DATE

HKS PROJECT NUMBER
27487.000

DATE
08/26/2026

ISSUE
DESIGN DEVELOPMENT

SHEET TITLE
SPECIALTY INTERIOR ELEMENTS

SHEET NO.
A9.22

1. Design Criteria

1.1. Governing Building Code — 2024 International Building Code (IBC)
A. Risk Category — IV

1.2. Floor Live Loading
A. Office — 80 psf Live Load + 20 psf Partition Load
B. Exit Facilities & Corridors — 100 psf Live Load
C. Mechanical Rooms — 125 psf Live Load or actual weights, if larger

1.3. Roof Loading
A. Roof Live Load — 20 psf
B. Roof Snow Load, p_f — 55 psf + Drift per IBC
1. Ground Snow Load, P_g — 65 psf
2. Snow Exposure Factor, C_e — 1.0
3. Thermal Factor, C_t — 1.0 Roof
4. Slope Factor, C_s — 1.0
5. Winter Wind Parameter, W_2 — 0.35
C. Roof Rain Load Intensity:
1. 15-min duration/100-year return period, I_{15} — 5.85 inches per hour
2. 60-min duration/100-year return period, I_{60} — 2.44 inches per hour

1.4. Earthquake
A. Seismic Design Category — D
B. Spectral Response Accelerations:
S_S = 1.53g S_{DS} = 1.00g
S_1 = 0.56g S_{D1} = 0.77g
C. Site Class — D
D. Basic Seismic-Force-Resisting System — Steel Special Moment Frames
R = 8.0 Ω_0 = 3.0 C_d = 5.5
E. Importance Factor, I_e — 1.5
F. Redundancy Factor, ρ — 1.0
G. Analysis Procedure — Equivalent Lateral Force (Static)
H. Seismic Design Coefficient, C_s — 0.177
I. Design Base Shear — 1910 kips
J. Building Seismic Movement:

Level	Total Displacement		Story Drift	
	Elastic — δ_e	Inelastic - δ	Elastic - Δ_e	Inelastic - Δ
High Roof	0.63"	3.47"	0.18"	0.99"
Roof	0.45"	2.48"	0.23"	1.24"
Level 2	0.23"	1.24"	0.23"	1.24"
Base	-	-	-	-

1.5. Wind
A. Basic Design Wind Speed, V — 113 mph
B. Allowable Stress Design Wind Speed, V_{asd} — 88 mph
C. Wind Directionality Factor, K_d — 0.85
D. Ground elevation factor, K_e — 0.85
E. Exposure category — C
F. Internal Pressure Coefficient, GC_{pi} — 0.18
G. Topographic Factor, K_{zt} — 1.0
H. Overall Horizontal Wind Load:
1. Plan N-S Direction — 160 kips
2. Plan E-W Direction — 220 kips
I. Components and Cladding Design Pressure:

Design Wind Pressure - LRFD (psf)

Location		Tributary Area (ft^2)			
		< 10	50	100	> 500
Walls	Within 14 ft of building corner	+ 25.5/ -34.0	+ 22.9/ -28.8	+ 21.8/ -26.5	+ 19.1/ -21.3
	All other areas	+ 25.5/ -27.7	+ 22.9/ -25.0	+ 21.8/ -23.9	+ 19.1/ -21.3
Roof	Within 20.5 ft of building exterior perimeter	+ 25.5/ -44.4	+ 22.9/ -37.6	+ 21.8/ -34.7	+ 19.1/ -27.9
	Between 20.5 ft and 41 ft of building exterior perimeter	+ 16.0/ -44.4	+ 16.0/ -37.6	+ 16.0/ -34.7	+ 16.0/ -27.9
	All other areas	+ 16.0/ -44.4	+ 16.0/ -25.5	+ 16.0/ -25.5	+ 16.0/ -17.3

1.6. Foundations
A. The soils report and log of borings was obtained by the Owner for the Engineer's use in the design of the foundation and is not a part of the Contract Documents. This report and log of borings is available for the Contractor's information but is not a warranty of the subsurface conditions. The Contractor may use the report at their own risk.
B. Soils Report by CMT Technical Services, dated July 2, 2026.
C. Soil Bearing Pressure: 4000 psf allowed with approved with rammed aggregate piers.
D. Increase for seismic or wind loading: 33%
E. Frost Depth: 30 inches below grade
F. Lateral Soil Pressure Fluid Equivalent Density:

Active (increase for seismic)	At-Rest (increase for seismic)	Passive (decrease for seismic)
40 pcf (21 pcf)	55 pcf (6 pcf)	300 pcf (21 pcf)

G. Coefficient of Friction — 0.35
H. Rammed Aggregate Pier Requirements:
1. Maximum total settlement shall be limited to 1 inch and to ½ inch differential with 75% of the total differential settlement occurring during construction.
2. Pier design shall provide settlement control and support loads as provided. Footings are sized to meet the bearing pressures listed. Piers shall be designed as a group under each footing to meet the minimum bearing pressure.
3. Piers shall extend to the depth defined in the geotechnical report to support the building loads.
4. Aggregate piers shall be designed and installed by a subcontractor with a minimum of five years of experience.
5. Pier density and replacement ratio shall be determined by pier subcontractor to meet the performance criteria indicated on the drawings and in the specifications.

1.7. Classification for Fire Rated Construction
A. For the purpose of determining fire-resistive assemblies, the following framing systems shall be considered unrestrained:
1. Open web steel framing members supporting metal decking.
2. Single span and simply supported end spans of multiple bays that are supported by bearing walls:
a. Steel beams supporting metal decking.
b. Concrete slabs or metal decking.
3. Interior spans of multiple bays supported by bearing walls:
a. Steel beams supporting metal decking.
B. All other steel floor and roof framing members shall be considered restrained.
C. Diagonal members in vertical braced frames shall be considered as secondary members for fireproofing protection.

2. Earthwork

2.1. Soil conditions shall be verified by the Geotechnical Engineer prior to placement of structural fill, floor slabs, and foundations. If soil conditions exist that are different than the soils report, the Structural Engineer shall be notified to re-evaluate the foundation design at additional expense to the owner.

2.2. Clearing: Prior to placing fill or base course, non-engineered fill, topsoil, organics, debris, and other deleterious material shall be removed at least 3 feet beyond the perimeter of the proposed building and flatwork. As a minimum the entire building area shall be scraped to remove the top 4 inches of soil.

2.3. Proof Rolling: The natural undisturbed soil below all footings shall be proof rolled prior to placing concrete. Remove all soft spots and completely replace them with compacted structural fill.

2.4. Remove all unsuitable material from below footings and replace it with compacted structural fill down to suitable natural soils meeting the minimum thickness requirement as defined in the Foundations section of the General Structural Notes. Under no circumstances shall the footings be placed on unsuitable non-engineered fill, loose or disturbed soils, debris, frozen soils, or ponded water. The width of structural compacted fill shall be equal to the width of the footing plus one foot for each foot of fill thickness.

2.5. Compacted Structural Fill: Structural fill shall be provided at all locations and extents described by the TYPICAL COMPACTED STRUCTURAL FILL DETAIL. All fill material shall be a well-graded granular material with a maximum size less than 4 inches and with no more than 10% passing a Number 200 sieve. All fill shall be compacted to the percent in the table below of the maximum laboratory density as determined by ASTM D1557. The fill shall be compacted flat without ruts or dips below all floor slabs. All fill shall be tested (See Specifications and the Quality Assurance section of the GSN).

Fill to Support	Compaction
Subgrade extending _ft beyond structures and _ft beyond flatwork	≥ 90%
Buildings and Foundations	≥ 95%
Concrete Flatwork & Floor Slabs	≥ 95%
Site Grading	≥ 95%
Retaining Wall Backfill	≥ 95%

2.6. Lightweight Foam Fill (Geofoam)
A. Materials shall comply with the Standards specified in accordance with ASTM D6817.
1. Foam types shall be as follows:

Lightweight Foam Type	Lightweight Foam Density (pcf)	Compressive Resistance @ 1% strain (psi)
EPS 12	0.70	2.2
EPS 15	0.90	3.6
EPS 19	1.15	5.8
EPS 22	1.35	7.3
EPS 29	1.80	10.9
EPS 39	2.40	15.0
EPS 46	2.85	18.6

B. Unsuitable fill, topsoil, debris and other deleterious material should be removed from areas where geofoam is placed. The subgrade should be observed by the Geotechnical Engineer prior to placement.
C. Lightweight foam blocks over soil should be placed on a drainage base course. The top of the drainage base course should be choked off with sand of fine gravel. Care should be taken to provide good contact between the gravel and geofoam.
D. Lightweight foam blocks should be placed in level layers. The initial layer of lightweight foam blocks should be checked often to verify that they are placed level. Lightweight foam blocks should be well-fitted together.
E. Structural loads, such as footings, retaining walls, or other settlement-sensitive structures should not be placed on the lightweight foam unless detailed otherwise. Do not place foam fill within compacted fill zone as defined in the TYPICAL COMPACTED STRUCTURAL FILL DETAIL.
F. Exterior Lightweight Foam Fill Use:
1. A bedding layer of free-draining gravel should be placed up to approximately ½ foot above the top of the footing. The gravel should be densified using vibratory compaction equipment.
2. Free-draining gravel, at least 1 foot wide, should be placed adjacent to lightweight foam. The gravel should connect to the drainage pipe near the base of footings. The gravel should be separated from the adjacent fill with a filter fabric.
3. A maximum thickness of 2 feet of topsoil may be placed above the geofoam in landscaping and grass areas. These areas should be observed by the Geotechnical Engineer prior to placement. Filter fabric shall be laced between the topsoil and lightweight foam.
4. A minimum of 1 ½ to 2 feet of underslab drainage base course shall be placed over the lightweight foam where concrete flatwork is expected.
G. Place lightweight foam blocks in a row with a layer offset of ½ the block width to blocks placed in adjacent rows of the same layer. To avoid continuous joints, each subsequent layer of blocks shall be rotated on the horizontal plane 90 degrees from the direction of placement of the previous layer placed.
H. Connectors shall be galvanized steel multi-barbed connectors or a urethane adhesive. Each connector shall have a lateral holding strength of at least 60 lbs with EPS15 and a minimum of 2 connectors for each 4 foot by 8 foot section.
I. Significant depths of lightweight foam fill are expected. The density of lightweight foam fill needed for the project depends on the depth at which it will be placed as shown in the following table.

Depth Range (feet)	Lightweight Foam Type
0-12	EPS 15
12-24	EPS 19
24-30	EPS 22
30-44	EPS 29
44-50	EPS 39

2.7. Underslab Drainage Base Course (Granular Fill): The base material should be a compactable, easy to trim, granular fill that will remain stable and support construction traffic. Compact the base course such that no ruts deeper than ½ inch are left by construction traffic. The base course shall be placed in lifts of up to 6 inches and be graded to a tolerance that results in the minimum slab thickness specified.
1. Depth of Drainage Base Course: 4 inches unless noted otherwise
2. The base course shall be one of the following materials at the contractor's option:
a. Density Graded: Crusher run or road base material with 100% passing the 1 ½ inch sieve, 15% to 55% passing the No. 4 sieve, and less than 12% passing the No. 200 sieve. Material passing the No. 200 sieve shall be clean, granular fill with less than 3% clay or friable particles.
b. Open Graded: Crushed rock with 100% passing the 1 inch sieve and 100% retained on the No. 4 sieve. This material is not as stable as densely graded material and rutting due to construction traffic is more common. To allow compaction and prevent ruts, the surface may need to be filled in or choked off with sand or fine gravels and compacted to provide a smooth, planar surface

2.8. It shall be the responsibility of the Contractor to brace and shore excavations as required.

3. Concrete

3.1. Materials shall comply with the Standards specified in American Concrete Institute (ACI) 318-19, "Building Code Requirements for Structural Concrete."
A. Concrete mix design requirements shall be as follows:

Location	fc at 28 days (psi)	Max W/C Ratio	Air Content (%)	Max Aggregate Size	Exposure Classes*			
					F	S	C	W
Footings	3000	-	-	1"	F0	S0	C0	W1
Interior Slabs on Grade	3000	-	-	1"	F0	S0	C0	W0
Exterior Walls	4500	0.45	6	¾"	F2	S0	C1	W1
Concrete over Steel Deck	3000	-	-	¾"	F0	S0	C0	W0
All other site cast concrete	4500	0.45	6	1"	F2	S0	C1	W1

* Exposure Classes are per ACI 318, Section 19.3.1.1, where F, S, C and W are exposure categories for freezing and thawing, sulfate, and corrosion protection of reinforcement, and contact with water, respectively.

B. Cementitious Materials:
1. Blended Hydraulic Cements (ASTM C595):
a. Type IL_r or approved equivalent, for exposure class S0.
b. Type $IL(MS)_r$ or approved equivalent, for exposure class S1.
c. Type $IL(HS)_r$ or approved equivalent, for exposure class S2 and S3.
2. Portland Cement (ASTM C150)
a. Type I or II for exposure class S0.
b. Type II or V for exposure class S1.
c. Type V for exposure class S2 and S3.
3. Fly Ash (ASTM C618, Class C, F, or N): maximum fly ash content as a percentage of total weight of cementitious materials shall be 25 percent.
C. Aggregates:
1. For concrete with exposure class W1 or W2, evidence shall be submitted that aggregates comply with the following:
a. Aggregates are not alkali-silica reactive or measures to mitigate alkali-silica reactivity have been established.
b. Aggregates are not alkali-carbonate reactive.
D. Concrete Density:
1. Normal weight concrete shall have a designed unit weight between 138 to 155 pounds per cubic foot. Aggregate shall be ASTM C33.
2. Lightweight concrete shall have an equilibrium unit weight to not exceed 110 + 3 pounds per cubic foot and shall be made of lightweight coarse aggregates and either lightweight and/or normal weight fines meeting ASTM C330.
E. Steel Reinforcement:
1. ASTM A615 Grade 60, fy = 60,000 psi min. unless noted otherwise.
F. Wire Reinforcement:
1. Welded Wire Fabric (WWF): ASTM A1064.
G. Fiber Reinforcement:
1. Synthetic Micro-Fiber: Fibrillated polypropylene micro-fibers engineered and designed for use in concrete, complying with ASTM C 1116, 1/2 to 1 1/2 inches long. Add to concrete at a dosage rate of 1 ½ lb/cu yd where indicated.
2. Macrosynthetic Fibers: Monofilament, non-fibrillating fibers made of a polypropylene/polyethylene blend. Macro fibers shall comply with ASTM C 1116, Type III, and meet the criteria of ASTM D 7508.
a. Where noted in the Sheet Deck Schedule, macrosynthetic fibers shall be added to concrete over steel deck at a dosage rate determined by the fiber manufacturer but not less than 4 lb/cu yd.
b. Do not burn off exposed fibers.
H. Admixtures:
1. Air-entraining admixtures, comply with ASTM C 260 (when used).
a. Tolerance on air content as delivered shall be +/- 1.5%.
b. When air content of a trowel finished floor slab exceeds 3%, there is an increased risk for delaminations and blistering to occur. When this situation is present, the Contractor shall pay special attention to the finishing procedures to help minimize such risks. Refer to ACI 302.1R-15 "Guide for Concrete Floor and Slab Construction" for proper finishing guidelines.
2. The use of super plasticizers and water reducers is allowed, but not required.
3. Calcium chloride or admixtures containing calcium chloride shall not be added to the concrete mix.
I. Chloride Ion: Maximum water-soluble chloride ion concentrations in hardened concrete at age between 28 and 42 days contributed from the ingredients including water, aggregates, cementitious materials, and admixtures shall not exceed a maximum, by weight of cementious materials, of 0.06% for all prestressed concrete, 1.00% for concrete with exposure class C0, 0.30% for concrete with exposure class C1, and 0.15% for concrete with exposure class C2.
J. Shrinkage Limit: Interior slabs on grade shall have a drying shrinkage limit of 0.040% tested in accordance with ASTM C157. Drying shrinkage test results shall be submitted with mix designs.
K. Only one grade or type of concrete shall be poured on the site at any given time.

3.2. Formwork shall comply with ACI Standards Publication 347 and the project specifications. The Contractor shall be responsible for the design, detailing, care, placement and removal of the formwork and shores.

3.3. Concrete cover requirements for deformed bar reinforcing steel shall comply with ACI 318, "Building Code Requirements for Structural Concrete".
A. Cast-in-place Concrete:

	Specified Cover
1. Cast against and permanently exposed to earth	3"
2. Formed concrete exposed to earth or weather	
#6 thru #18 bars	2"
#5 and smaller	1.12"
3. Concrete not exposed to weather or in contact with ground	
Slabs, Walls, Joists; #11 bars and smaller	3/4"
Beams, Columns: primary reinforcement, ties, stirrups, spirals	1.12"

3.4. Minimum Spacing of Reinforcement
A. For parallel reinforcing bars in a horizontal layer, clear spacing between bars shall be at least the greatest of 1 inch, nominal diameter of the bars considered, and 4/3 times the nominal maximum size of coarse aggregate in the concrete.
B. For longitudinal bars in columns, pedestals, struts and boundary elements in walls, clear spacing shall be at least the greatest of 1 ½ inches, 1.5 times the diameter of the bars considered and 4/3 times the nominal maximum size of coarse aggregate in the concrete.
C. If scheduled reinforcing cannot meet these provisions, notify the Engineer of Record.

3.5. Construction Joints and Control Joints
A. Provide a surface intentionally roughened to ¼ inch amplitude in all wall footings. A continuous keyway shall not be used for concrete shear wall to footing connections, unless specifically indicated. Refer to project plans, schedules and details for the shear wall to footing connection requirements.
B. All horizontal and vertical construction joints shall have a surface intentionally roughened to ¼ inch amplitude. A continuous 2x4 keyway may be used on elements other than shear walls.
C. Provide reinforcement dowels to match the member reinforcement across the joint, unless noted otherwise. For dowels across construction joints and wall to footing connections of concrete shear walls, refer to specific project plans, schedules, and details.
D. Construction joints in suspended concrete pours shall be made at the center of spans.
E. Slabs on grade shall have construction or control joints spaced not to exceed 30 times the slab thickness in any direction.
F. Control joints shall be installed in slabs on grade so the length to width ratio of the slab is no more than 1.25:1. See typical details for joint configuration.
G. Control joints in visually exposed walls, unless noted otherwise (Joints shall line up with masonry and architectural joints, see drawings):
1. Vertical control joints at 10'-0" on center.
2. Reinforcing shall be continuous through control and construction joints, unless noted otherwise.
3. Control joints in concrete foundation walls shall line up with masonry control joints.
H. Control joints shall be installed in concrete slabs over steel deck by saw-cutting along girders and purlins at interior grid lines. See typical details for joint size and reinforcement. Reinforcement required shall be in addition to any slab reinforcement.
I. All sawcut control joints shall be completed within 12 hours of concrete placement.

3.6. Detailing: All reinforcing, including welded wire fabric, shall be detailed, bolstered & supported to comply with ACI 315, "Details and Detailing of Concrete Reinforcement" and the Concrete Reinforcing Steel Institute (CRSI) recommendations. Reinforcing bars shall not be welded unless specifically shown on drawings.
A. All reinforcing shall be developed in compliance with the CONCRETE REINFORCING BAR DEVELOPMENT AND LAP SPLICE SCHEDULE. As indicated in the drawings or upon approval of the Engineer of Record, standard tension hooks or headed bars described by the TENSION HOOK DEVELOPMENT SCHEDULE or the TENSION HEADED BAR DEVELOPMENT SCHEDULE may be used in lieu of straight bars.
B. All embedded elements and dowels shall be securely tied to formwork or to adjacent reinforcing prior to the placement of concrete.
C. Use chairs or other support devices recommended by CRSI to support and tie reinforcement bars and welded wire fabric prior to placing concrete. Welded wire fabric shall be continuously supported at 36 inches on center maximum.
D. See typical details for reinforcing at wall intersections and ends, reinforcing around wall openings and suspended slab openings, vertical wall dowels, concrete column ties and splices in vertical column reinforcing.
E. See typical details for column cross-ties. The 90-degree hooks of two successive crossties engaging the same longitudinal bars shall be alternated end for end.
F. Where required, reinforcement is to be terminated in a standard hook or headed bar anchor. Refer to the TENSION HOOK DEVELOPMENT SCHEDULE, the TENSION HEADED BAR DEVELOPMENT SCHEDULE and the REINFORCEMENT END HOOK SCHEDULE as appropriate. Unless otherwise noted, a standard hook or headed bar anchor is equivalent and may be substituted at the Contractor's option.
G. Contractor shall coordinate placement of all openings, curbs, dowels, sleeves, conduits, bolts, inserts and other embedded items prior to concrete placement.
H. All reinforcement shall be bent cold and shall be bent only once at the same location. All reinforcement shall be shop bent, unless otherwise permitted by the Engineer of Record.

3.7. Minimum Reinforcing: Wall reinforcing shall be as follows, unless noted otherwise:

Wall Thickness	Horizontal Reinforcing	Vertical Reinforcing
6"	#4 @ 13" o.c. Section 6.4.	#4 @ 18" o.c.
8"	#5 @ 15" o.c.	#4 @ 16" o.c.
10"	#5 @ 12" o.c.	#4 @ 13" o.c.
12"	#4 @ 13" o.c. Each Face	#4 @ 18" o.c. Each Face
Others	0.25% of Wall Area	0.15% of Wall Area

Spacing shall exceed neither 3 times the wall thickness nor 18 inches. In addition to the above reinforcing, 2 - #5 x continuous horizontal bars shall be placed at the bottom of the wall (near the footing) and at each floor level, at the roof level and at the top of wall.

3.8. No aluminum conduit or product containing aluminum or any other material injurious to concrete shall be embedded in concrete.

3.9. Unless otherwise noted, all slabs on grade shall be 4 inches thick.

4. Structural Steel

4.1. Material
A. W-Shapes and Channel Sections: ASTM A992, (F_y = 50 ksi), except as noted otherwise
B. Rectangular and Square Hollow Structural Sections (HSS): ASTM A500, Grade C (F_y = 50 ksi)
C. Round HSS: ASTM A500, Grade C (F_y = 50 ksi)
D. Steel Pipe: ASTM A53, Grade B (F_y = 35 ksi)
E. Angle Shapes: ASTM A572 (F_y = 50 ksi)
F. All Other Shapes and Plates: ASTM A36 (F_y = 36 ksi), except as noted otherwise
G. Steel Deck:
1. Galvanized Steel Sheet: ASTM A653 or A1063, Grade 50 with G60 galvanized coating.
2. Ungalvanized Steel Sheet: ASTM A1008 or A1039, Grade 50
H. High-Strength Bolts:
1. Group 120: ASTM F3125 Grades A325 & F1852
2. Group 150: ASTM F3125 Grades A490 & F2280
3. Group 200: ASTM F3043 & ASTM F3111
I. Deformed Bar Anchors (DBA): ASTM A496 or ASTMA1064, 70 ksi minimum yield strength.
J. Headed Stud Anchors (HSA): ASTM A108, with dimensions complying with AISC specifications
K. Anchor Rods: ASTM F1554, Grade 36, unless noted otherwise, with ASTM A563 heavy hex nuts and ASTM F436 hardened washers
L. Structural steel designated as part of the seismic force resisting system shall be supplied with minimum Charpy V-Notch impact test results of 20 ft-lbs. absorbed energy at 70 degrees Fahrenheit, indicated below:
1. Hot rolled shapes with flanges 1.1/2 inches thick and thicker tested in accordance with ASTM A6, Supplementary Requirement S30.
2. Plates 2 inches and thicker tested in accordance with ASTM A6, Supplementary Requirement S5. The impact test shall be conducted in accordance with ASTM A673
3. Test Frequency: Each heat
M. Structural steel not designated as part of the seismic force resisting system shall be supplied with minimum Charpy V-Notch impact test results of 20 ft-lbs. absorbed energy at 70 degrees Fahrenheit, indicated below:
1. Hot rolled shapes with flanges 2 inches thick and thicker tested in accordance with ASTM A6, Supplementary Requirement S30.
2. Plates 2 inches and thicker tested in accordance with ASTM A6, Supplementary Requirement S5. The impact test shall be conducted in accordance with ASTM A673
3. Test Frequency: Each heat

4.2. Fabrication and construction shall comply with the following Codes and Standards:
A. American Institute of Steel Construction (AISC)
1. AISC 360-22, "Specification for Structural Steel Buildings"
2. AISC 341-22, "Seismic Provisions for Structural Steel Buildings"
3. AISC 303-22, "Code of Standard Practice for Steel Buildings and Bridges"
a. The structural drawings shall be used in conjunction with the architectural drawings. Detailing and shop drawing production for structural elements will require information (including dimensions) contained in architectural, structural, and/or other consultants' drawings. Refer to the Special Instructions section of the general notes.
4. AISC 358-22, "Prequalified Connections for Special and Intermediate Steel Moment Frames for Seismic Applications."
B. Research Council on Structural Connections (RCSC), "Specification for Structural Joints Using High-Strength Bolts," dated June 11, 2020.
C. American Welding Society (AWS)
1. AWS D1.1–2020: "Structural Welding Code — Steel" (specific items do not apply when they conflict with the AISC requirements)
2. AWS D1.8–2021: "Structural Welding Code — Seismic Supplement" (specific items do not apply when they conflict with the AISC requirements)
D. Steel Joist Institute (SJI)
1. SJI 100-2020, "Standard Specification for K-Series, LH-Series, DHL-Series Open Web Steel Joists and for Joist Girders"
2. SJI 200-2015, "Standard Specification for CJ-Series Composite Steel Joists"

4.3. Structural shapes and plates shall be fabricated from newly rolled (milled) one-piece sections without splices, unless specifically noted otherwise on the structural drawings. Connections for structural steel shall comply with the structural drawings, unless written approval is given by the Engineer of Record.

4.4. Welding
A. It is recommended the steel erection contractor and steel fabricator contact the Quality Assurance Agency prior to beginning any welds. A program of joint preparation and welding procedures should be worked out between the two parties before the welding is started so that correct welds will be made from the beginning.
B. Certification of Welders: All shop and field welding shall be executed by AWS certified welders who have been specifically certified for the process of welding being performed. The welder's certification will be considered as being current unless the welder is not engaged in the process of welding being performed for a period exceeding six months or there is a specific reason to question a welder's ability as required by AWS. Certification and records must comply with AWS Standards. Certification and appropriate records must be provided to the Architect prior to beginning work.
C. Electrodes: E-70 XX or as noted otherwise. E60 XX may be used for welding steel floor and roof decks.
D. Minimum Welds: All intersecting steel shapes that are not bolted shall be connected by a fillet weld all around, unless noted otherwise. Fillet weld sizes that are not shown shall be 1/16 inch less than the thinnest of the connected parts for thicknesses ¼ inch and larger. Fillet welds on plates less than ¼ inch shall be of the same size as the thinnest of the connected parts.
E. Reinforcing Bars: Do not weld rebar except as specifically detailed in the drawings. In such cases, use only AWS standards. Do not substitute reinforcing bars for deformed bar anchors (DBAs), machine bolts, or headed stud anchors (HSAs).
F. Bolts: Do not apply any welds, including "tack" welds to bolts, including anchor bolts, except as specifically detailed in the drawings.
G. Headed Stud Anchor (HSA) welding and Deformed Bar Anchor (DBA) welding shall conform to the manufacturer's specifications. Welding shall comply with AWS D1.1 Section 9.6 through 9.9 and Annex G.
H. Special Provisions for Welds in the SFRS (Seismic Force Resisting System): Welds used in members and connections of moment frames, braced frames, and collector elements shall comply with these requirements. Welding methods, procedures and quality control shall comply with AISC 341 Chapter J, AWS D1.1, AWS D1.8 and the following:
1. Demand Critical Welds: The following CJP groove welds are demand critical and shall comply with the special requirements for Demand Critical Welds.
a. Beam flanges to columns, single plate shear connections to columns, and beam webs to columns in moment frames.
b. Column splice welds including column bases in moment frames and braced frames.
c. Link beams to columns in Eccentrically Braced Frames.
d. Web plate to flange plate welds in built-up Eccentrically Braced Frame link beams.
e. Other welds designated as demand critical in the drawings.
2. Welding shall be performed in accordance with AISC 341 Chapter J, and the welding procedure specification (WPS) as required in AWS D1.1. WPS variables shall be within the parameters established by the filler metal manufacturer. WPS for demand critical welds shall also comply with AWS D1.8 Section 6.1.
3. Consumables for Welding:
a. Welds used in members and connections of the SFRS shall be made with filler metals meeting the requirements specified in section 6.1 of AWS D1.8.
b. Filler metal properties shall be as follows:

Property	70 ksi Classification	80 ksi Classification
Yield Strength, ksi	58 min	68 min
Tensile Strength, ksi	70 min	80 min
Elongation (%)	22 min	19 min
CVN Toughness, ft-lbf	20 min @ 0 degrees F	20 min @ 0 degrees F

c. Filler metals in Demand Critical Welds shall receive Heat Input Testing that achieves the properties listed above with CVN toughness of 40 ft-lbf min @ 70 degrees F and shall comply with AWS D1.8 section 6.1, 6.2, and 6.3.
d. Diffusible Hydrogen: Welding electrodes and electrode-flux combinations shall meet the requirements of AWS D1.8 Table 6.2. The manufacturer's Certificate of Conformance shall be considered adequate proof of this requirement.
e. Intermixed filler metals shall meet the requirements of AWS D1.8 section 6.1.4.
4. Backer bars shall be removed from the beam bottom flange to columns. The root of the weld shall be back gouged to sound metal to remove all slag and cracks. Weld the back gouged region and finish welding using a reinforcing fillet weld. Comply with AWS D1.8 sections 6.13 and 6.14. This requirement also applies to all non-fusible backing used at beam to column CJP welds. Comply with AWS D1.8 section 6.15.
5. Steel backer bars need not be removed from the beam top flange connections to columns or at continuity plate connections to columns provided that the backer bars are welded to the column flange with a continuous 5/16 inch fillet weld on the edge below the CJP groove weld for the entire length of the backer bar.
6. Backing at beam flange to column flange joints shall not be welded to the underside of the beam flange, nor tack welded at this location. If fillet welds or tack welds are placed between the backing and the beam flange in error, they shall be repaired per AWS D1.8 Section 6.18.4.
7. Details and treatment of weld tabs shall be per AWS D1.8 Section 6.16. Use weld tabs as specified in AWS D1.1 Section 7.30 except at the end of CJP welds adjacent to the column web/flange juncture at continuity plates. Remove weld tabs to within 1/8 inch of the base metal surface after welding. Where weld tabs are used at continuity plates, remove them to within 1/4 inch of the base metal surface after welding. Finish the edge where weld tabs are removed to a surface roughness of 500 micro-inches.
8. CJP joints in members with different thickness or widths (such as column splices) shall be transitioned in a manner that the slope in the transition does not exceed 1 in 2 ½. The transition shall be accomplished by chamfering the thicker part, tapering the wider part, sloping the weld metal, or by a combination of these.
9. Quality requirements for weld access holes for all demand critical welds shall comply with AWS D1.8 Section 6.11. Weld access hole shape shall be per AWS D1.8 Figure 6.2.
10. Beam bottom flange welding sequence shall comply with AWS D1.8 Section 6.9.
11. Preheat, and interpass temperatures shall comply with AWS D1.1 Section 5.7 and AWS D1.8 Section 6.7.
12. Additional welding provisions applicable to demand critical welds only are as follows:
a. Welding processes shall comply with AWS D1.8 Section 6.5.
b. Filler metal packaging and exposure limitations shall comply with AWS D1.8 Section 6.4.
13. Tack welds shall comply with AWS D1.1 Section 7.17 and AWS D1.8 Section 6.12. Tack welds attaching backing bars and weld tabs at demand critical welds shall be placed where they are incorporated into a final weld.
14. Imperfections such as cracks, gouges, grooves, arch strikes and notches will not be permitted within the Protected Zone. Imperfections within the Protected Zone shall be repaired or removed in accordance with AWS D1.8 Section 6.18.5.
15. Braced Frame Welding: Lengths shown for fillet welds at brace-to-gusset, gusset-to-beaseplate, and column-to-gusset connections are minimums, intended for establishing gusset plate dimensions. Weld entire contact length at these joints, typical.

4.5. Bolted Connections
A. Provide snug tightened joints with Group 120 (threads not excluded) bolts for steel-to-steel connections, unless noted otherwise. Snug tightened joints shall be used in connections for simple span framing and beam (or girder) to bearing plate connections. Snug tight is the condition that exists when all of the plies in a connection have been pulled into firm contact by the bolts in the joint and all of the bolts in the joint have been tightened sufficiently to prevent the removal of the nuts without the use of a wrench. The snug tightened condition is typically achieved with a few impacts of an impact wrench, application of an electric torque wrench until the wrench begins to slow, or the full effort of a worker on an ordinary spud wrench.
B. Provide pretensioned joints with Group 120 (threads not excluded) Type 1 bolts for all steel-to-steel connections that are part of the Lateral Force Resisting System (LFRS) also indicated with "§". Faying surfaces shall meet the requirements of a slip-critical Class A surface except for faying surfaces of end plate moment connections. Tighten bolts by the turn of the nut, calibrated wrench, or direct tension indicator method. Alternate fastener designs as defined by AISC shall be submitted to the Engineer of Record for review and acceptability prior to installation. Provide hardened washers beneath turned element.
C. Provide pretensioned joints with Group 120 (threads excluded) Type 1 bolts for all steel-to-steel connections, unless noted otherwise. Tighten bolts by the turn of the nut, calibrated wrench, or direct tension indicator method. Alternate fastener designs as defined by AISC shall be submitted to the Engineer of Record for review and acceptability prior to installation. Provide hardened washers beneath turned element.
D. Provide pretensioned joints with Group 120 (threads included) Type 1 bolts for all steel-to-steel connections, unless noted otherwise. Tighten bolts by the turn of the nut, calibrated wrench, or direct tension indicator method. Alternate fastener designs as defined by AISC shall be submitted to the Engineer of Record for review and acceptability prior to installation. Provide hardened washers beneath turned element.
E. Provide slip critical joints with Group 120 Type 1 bolts for steel-to-steel connections subject to fatigue with load reversal, joints that utilize oversized holes, and joints that utilize slotted holes not loaded perpendicular to the long direction of the slot. Faying surfaces shall meet the requirements of a slip-critical Class A surface. Tighten bolts by the turn of the nut, calibrated wrench, or direct tension indicator method. Alternate fastener designs as defined by AISC shall be submitted to the Engineer of Record for review and acceptability prior to installation.
F. Provide hardened washers beneath the turned element of all bolts or nuts. Provide hardened beveled washers, to compensate for the lack of parallelism, where the outer face of the bolted parts has a slope greater than one in twenty with respect to the plane normal to the bolt axis. Hardened washers or plates installed over oversized holes or slotted holes shall be at least 5/16 inch thick and shall conform to ASTM F436. Plates or bars installed at slotted holes shall have a size sufficient to completely cover the slot after installation.
G. Where a steel-to-steel beam connection is not detailed in the drawings, provide a standard AISC framed connection with the capacity to support one half of the total uniform load capacity of the given shape for the span and for the steel specified.
H. Bolts, nuts and washers shall not be reused.

4.6. Steel Lintels
A. Provide steel angle lintels at all openings through the masonry veneer. Provide 1 inch of bearing for each foot of width of opening, with a minimum bearing of 6 inches. See the STEEL ANGLE LINTEL SCHEDULE for size. All steel lintels shall be galvanized unless noted otherwise.

4.7. Beam Web Stiffener Plates
A. Provide full-height web stiffener plates to each side of all beams above all bearing points. Unless noted otherwise, stiffener plates shall be the thickness indicated in the typical stiffener plate detail.

4.8. Composite Beams
A. Composite beams are indicated on the framing plans with the suffix ( ). The number inside the brackets indicates number of headed stud anchors for this beam. Beams shall have the studs spaced uniformly over the entire beam length.
B. Beams which have more than one number inside the symbol (, ,), such as (W, X, Y, Z), shall have "W" number of studs spaced evenly over the first "section of beam", "X" number of studs spaced evenly over the second "section of beam", "Y" number of studs spaced evenly over the third "section of beam", and "Z" number of studs spaced evenly over the fourth "section of beam". A "section of beam" is defined as that portion of beam located between the column and the nearest intersecting framing member or that portion of beam located between two adjacent intersecting framing members.
C. Use ¾ inch diameter studs. Headed studs shall extend 1 ½ inches minimum above the top of the steel deck after welding unless noted otherwise. Headed studs shall be applied through the metal deck to the top flange of the steel section or welded directly to the steel section.
D. The minimum center-to-center spacing of stud connectors shall be 6 stud diameters along the longitudinal axis of the supporting composite beam and 4 stud diameters transverse to the longitudinal axis of the supporting composite beam. The maximum center to center spacing shall not exceed 32 inches.
E. C= XX" on the plans denotes pre-camber dimension (upward) in inches.

4.9. Open Web Steel Joists and Girders
A. The steel joist supplier shall be responsible for the design of all open web steel joists and girders. Joists or girders with slopes greater than ½ inch per foot shall be designed to meet or exceed the load capacities, listed in the SJI load tables, of the joist or girder sizes indicated on the framing plan, as if the joists or girders were installed level.
B. Open web joists and girders shall be designed with maximum deflection limits of L/240 for total load and L/360 for live load, where L is the joist span.
C. Where uplift loads due to wind are indicated, rows of bottom chord bridging shall be provided at the first bottom chord panel points per SJI Specifications. This is in addition to the bridging shown on the framing plans.
D. Provide special bearing ends to accommodate slopes from sloped joists

E. AISI S400-20: "North American Standard for Seismic Design of Cold-formed Steel Structural Systems," 2020 Edition

6.4. Cold-Formed Steel Framing
A. All cold-formed steel (and/or) joist framing members along with all runner, bridging, and end track shall be of the designation shown on the plans, schedules, and details. The framing member designators used in the plans, schedules, and details follow the convention established by the Steel Stud Manufacturers' Association (SSMA) and the North American Steel Framing Alliance (NASFA). Framing members provided shall comply with the designations according to this convention. See Steel Stud Manufacturers Association- Nomenclature for an explanation of the stud or track designations.
B. All components shall be galvanized.
C. Where not noted in the drawings, all non-load-bearing exterior cold-formed steel framing members shall have a base metal thickness of 54 mil or greater.
D. All jamb, header, and sill components shall be continuous without splices unless noted otherwise. Jambs shall extend continuous from floor to floor, roof, or wind girt.
E. Web punchouts in header stud or joist members shall not be located within 12 inches of the support.
F. Fasteners for steel stud construction shall be self-drilling and self-tapping meeting ASTM C1513. Screw-type fasteners shall penetrate the joined materials with a minimum of three threads exposed. Furnish, install, and tighten screws per the manufacturer's recommendations and per the sizes indicated in the details. The minimum screw-type fastener size shall be #10 for any connection, unless noted otherwise, or the manufacturers' minimum recommended size for framing clips and bridging. Screws shall have a center-to-center spacing of at least 3 times the nominal diameter of the screw unless noted otherwise. Screws shall have center-of-screw to edge-of-steel dimensions of at least 1.5 times the nominal diameter of the screw unless noted otherwise.
G. See the Typical Steel Stud Wall Bridging Detail for wall stud bridging requirements. Proprietary bridging systems may be used upon submission, review, and approval by the Architect/Engineer. Cold-rolled channel (or steel angle) bridging shall not be used without suitable full-depth angle clips fastened to the studs and channel or angle to prevent stud roll-over.
H. Exterior non-load-bearing wall to floor or roof connections shall use deflection tracks or steel clips designed to accommodate vertical deflection of the floor or roof structure. See specific details for further information. Vertical deflection assemblies shall accommodate ¾" min of vertical deflection unless noted otherwise. Do not attach screws through sheathing into top track of deflection assembly. Top screw through sheathing shall be 1" below track.
I. Connection clips as specified in the schedules and details use The Steel Network (TSN) products as the basis of design. Other manufacturer's connection clips must be submitted for review and approved by the Architect/Engineer prior to use and shall clearly indicate all ICC/APMO code reports, load capacities and engineering associated with their use. Follow all manufacturers' requirements for the use of these products. Follow required screw patterns as required by the manufacturer based on the number of screws indicated. Web punchouts shall not be located within 6 inches of connection clips.
J. Proprietary headers, jamb studs, and other miscellaneous framing may be substituted for framing but must be submitted to the Engineer of Record & reviewed prior to ordering material or fabricating & installing such components. Submittals for substitution of such components must clearly state what is being substituted and show equivalence to the components being replaced.

6.5. Welding:
A. The steel stud contractor shall contact the Quality Assurance Agency prior to beginning any welds. A program of joint preparation and welding procedures should be worked out between the two parties before the welding is started so that correct welds will be made from the beginning.
B. Certification of Welders: All shop and field welding shall be executed by AWS certified welders who have been specifically certified for the process of welding being performed. The welder's certification will be considered as being current unless the welder is not engaged in the process of welding being performed for a period exceeding six months or there is a specific reason to question a welder's ability as required by AWS. Certification and records must comply with AWS Standards. Certification and appropriate records must be provided to the Architect prior to beginning work.
C. Unless noted otherwise, all welded connections shall be done using $^1/_8$ inch AWS type 6013 or 7014 rod with a welding heat of 60-110 amperes depending on the gauge of material and the fit of the parts. Wire tying of framing components shall not be permitted. Welds and damaged coatings on studs shall be repaired with zinc galvanizing repair paint.

6.6. The contractor shall submit shop drawings with complete elevations and details defining framing member sizes, locations, and connection details for review. Shop drawings shall be submitted prior to fabrication. Submittals shall bear the stamp of a Professional Engineer licensed in the State of the Project.

6.7. Submittals with Prefabricated Systems or systems intended to replace conventional framing herein shall have complete shop drawings and calculations of all elements for review and bear the stamp of a Professional Engineer licensed in the State of the Project.

7. Miscellaneous

7.1. Post-Installed Anchors in Concrete
A. Anchorage to hardened concrete shall include all mechanical and adhesive anchors and epoxy doweled reinforcing bars of size, quantity, spacing, and embedment as shown on the drawings. Additional anchors shall not be used without approval from the Engineer of Record prior to installation.
B. Special inspection is required during the installation of all post-installed anchors. Refer to applicable code evaluation reports and the Quality Assurance and Statement of Special Inspections sections of the General Structural Notes.
C. Anchorage to Concrete:
1. All post-installed anchors into hardened concrete shall be selected from the following pre-approved products, unless noted otherwise:

Steel Screw Anchor	Evaluation Report
Hilti Kwik HUS-EZ	ICC ESR-3027
DeWalt Screw-Bolt+	ICC ESR-3889
Simpson Titen HD	ICC ESR-2713

Steel Expansion/Wedge Anchor	Evaluation Report
Hilti Kwik Bolt TZ2	ICC ESR-4266
DeWalt Power-Stud+ SD2	ICC ESR-2502
Simpson Strong-Bolt 2	ICC ESR-3037

Adhesive Anchor System	Evaluation Report
Hilti HIT-HY 200 V3	ICC ESR-4868
Hilti Kwik-X	ICC ESR-5065
Hilti HIT-RE 500 V3	ICC ESR-3814
DeWalt AC200+	ICC ESR-4027
DeWalt Pure 110+	ICC ESR-3298
Simpson SET-3G	ICC ESR-4057

2. Adhesive anchors shall be installed into concrete having a minimum age of 21 days. For installations sooner than 21 days, consult the adhesive manufacturer.
D. Alternate anchors or adhesives are permitted with approval of the Engineer of Record. The Contractor shall submit the proposed anchor product data and code evaluation report demonstrating the anchor is equivalent to or exceeds the capacity of the specified anchor.
E. Installation of adhesive anchors horizontally or upwardly inclined to support sustained tension loads shall be performed by personnel certified by an applicable certification program. Certification shall include written and performance tests in accordance with the ACI/CRSI Adhesive Anchor Installer Certification program, or equivalent. Proof of current certification shall be submitted to the Engineer of Record for approval prior to commencement of installation.
F. Anchors shall be installed according to the Manufacturer's Printed Installation Instructions and applicable code evaluation reports including:
1. Hole diameter, depth, and cleaning procedure
2. Adhesive mixing, preparation, and placement
3. Installation torque
G. Locate all existing reinforcement and embedded items prior to drilling into concrete or masonry elements. Do not damage rebar or embeds while drilling or installing anchors.
H. Grout all defective or abandoned holes with non-shrink grout or an injectable epoxy adhesive matching the surrounding concrete compressive strength. Consult the Architect for additional requirements at architecturally exposed concrete.
I. Carbon steel anchors are limited to use in dry, interior locations.
J. Holes for post-installed anchors may not be core drilled unless specifically allowed by the manufacturer's installation instructions and the code evaluation report. Holes shall not be re-used unless approved by the manufacturer.

8. Special Instructions

8.1. The project specifications are not superseded by the General Structural Notes but are intended to be complementary to them. Consult the specifications for additional requirements in each section. Notes and specific details on the drawings shall take precedence over General Structural Notes and typical details.

8.2. The architectural drawings are the prime contract drawings. Consultant drawings by other disciplines are supplementary to the architectural drawings. All omissions or conflicts, including dimensions, between the various elements of the consultants' drawings and/or specifications shall be brought to the attention of the Architect before proceeding with any work involved. In case of conflict, follow the most stringent requirement as directed by the Architect without additional cost to the Owner. Any work done by the Contractor after discovery of such discrepancy shall be done at the Contractor's risk.

8.3. The structural drawings shall be used in conjunction with the architectural drawings. Primary structural elements and overall structural layout are indicated within the structural plans and details. Some secondary elements, architectural layouts, alcoves, elevations, slopes, depressions, curbs, mechanical equipment and electrical equipment, are not indicated within the structural drawings. Detailing and shop drawing production for structural elements will require information (including dimensions) contained in the architectural, structural and/or other consultants' drawings.

8.4. Shoring and Bracing Requirements
A. Floor and Roof Structures – The General Contractor is responsible for the method and sequence of all structural erection. The Contractor shall provide temporary shoring and bracing as the method of erection requires to provide adequate vertical and lateral support. Shoring and bracing shall remain in place as the chosen method requires until all permanent members are in place and all final connections are completed, including all roof and floor attachments. The building shall not be considered stable until all connections are complete.
B. Foundation walls must be braced until the complete floor or roof systems is completed. Do not backfill until the floor or roof systems are in place.
C. Walls above grade shall be braced until the structural system is complete. Walls shall not be considered to be self-supporting.

8.5. Submittals: A copy of all shop drawings that have been submitted for review must be kept at the construction site for reference. These drawings must bear the appropriate review stamps. The shop drawing review shall not relieve the Contractor of the responsibility of completing the project according to the contract documents. The General Contractor shall review and mark all shop drawings prior to submitting them to the Architect for review. Shop drawings made from reproductions of (these) contract drawings will be rejected.

8.6. Project Coordination: It shall be the responsibility of the General Contractor to coordinate with all trades any and all items that are to be integrated into the structural system. Openings or penetrations through, or attachments to the structural system that are not indicated on these drawings shall be the responsibility of the General Contractor and shall be coordinated with the Architect/Engineers. The order of construction is the responsibility of the General Contractor. It is the Contractor's obligation to provide all items necessary for the chosen procedure.

8.7. Contractor shall field verify all dimensions, and conditions. If the contract drawings do not represent actual conditions, Contractor shall notify Architect/Engineer prior to fabrication or construction within that area.

8.8. Notice of Copyright: The structural drawings, plans, schedules, notes and details are hereby copyrighted by Reaveley Engineers. Submission or distribution of documents to meet official regulatory requirements or for similar purposes in connection with the project is not to be construed as publication in derogation of Reaveley Engineers' reserved rights. The documents defining the structure are instruments of service prepared by Reaveley Engineers for one use only. Furthermore, these documents shall not be reproduced, or copied, in whole or in part by the Contractor or subcontractors for preparation of shop drawings or other submittals.

9. Quality Assurance

9.1. Quality Assurance Agency Requirements
A. The Owner shall engage a qualified Quality Assurance Agency (QAA) to provide all special inspection and quality assurance testing for the project. The QAA shall provide all information necessary for the building official to determine that the agency meets the applicable requirements.
1. The QAA shall be objective, competent and independent from the Contractor responsible for the work being inspected. The agency shall disclose to the building official and the registered design professional in responsible charge possible conflicts of interest so that objectivity can be confirmed.
2. The QAA shall have adequate equipment to perform required tests. The equipment shall be periodically calibrated.
3. The QAA shall employ experienced personnel educated in conducting, supervising and evaluating tests and special inspections. Experience or training shall be considered relevant where the documented experience or training is related in complexity to the same type of special inspection or testing activities for projects of similar complexity and material qualities.
4. The QAA shall send copies of all inspection and testing reports to the building official, Owner, Architect, Engineer of Record and Contractor. Reports shall indicate that the work inspected was or was not completed in conformance to the approved construction documents. Discrepancies shall be brought to the immediate attention of the Contractor for correction. If they are not corrected, the discrepancies shall be brought to the attention of the Architect and Engineer of Record.
5. The QAA shall submit a final report documenting required special inspections and tests, and correction of any discrepancies noted in the inspections or tests. The final report shall be distributed to the building official, Owner, Architect and Engineer of Record in a timely manner prior to the completion of the project.

9.2. Contractor Responsibilities
A. The Contractor shall submit a written statement of responsibility to the building official and the Owner or the owner's authorized agent prior to the commencement of work on the systems or components listed in the statement of special inspections. The Contractor's statement of responsibility shall contain acknowledgement or awareness of the special requirements contained in the statement of special inspections.
B. Notification of QAA: The Contractor shall notify the QAA in a timely manner so that inspection and testing may be performed as outlined in the statement of special inspections.

9.3. Structural Observations by the Engineer of Record
A. The Engineer of Record will perform structural observations at critical phases of the project as listed below. Observations will be made on a periodic basis throughout the construction of the structural system. During this timeframe, site visits will be made approximately ____ Copies of the observation report will be distributed to the Architect, Contractor, Owner, and QAA.
B. The contractor shall notify the Engineer of Record at least 24 hours in advance before any of the following actions.
1. Placing concrete in any footing, mat footing, deep foundation, grade beam, or pier.
2. Closing any wall forms.
3. Placing concrete in any column, beam, or suspended slab.
4. Grouting any masonry.
5. Completing the structural steel framing.
6. Completing the welding or fastening of major sections of steel decking.
7. Completing the fastening of any sheathing on wall, roof, or floor system.
C. The Engineer of Record will perform a structural observation at a critical phase of the project. Copies of the Engineer's report will be distributed to the Architect, Contractor, Owner, and QAA.
D. The contractor shall notify the Engineer of Record at least 24 hours in advance before
E. Observation visits to the site by the Engineer of Record or the Engineer's field representatives shall not be construed as inspection or approval of construction.

10. Statement of Special Inspections

10.1. The following materials, systems and components require special inspection or testing per Chapter 17 of the International Building Code (IBC).

10.2. For items requiring continuous inspection, a special inspector must be present onsite during the performance of that task. In most cases, periodic inspections/tests shall be performed prior to commencing the task, intermittently during the task, and at the completion of the task. Frequency marked with (E) designates periodic inspections that must be performed prior to or upon completion of every task and for each member, welded joint, and bolted connection.

10.3. Special inspections during fabrication are not required where the work is done on the premises of a fabricator approved by the authority having jurisdiction to perform such work without special inspection. At the Owner's discretion, periodic inspection, testing, or auditing of the fabricator's quality control processes may be performed by the Owner's quality assurance agency. At completion of fabrication, the fabricator shall submit a certificate of compliance for submittal to the building official, as specified in Section 1704.5, stating that the work was performed in accordance with the approved construction documents.

Structural Steel per IBC Section 1705.2.1, 1705.13.1 & 1705.14.1

Item	Frequency	Detailed Instructions
Prior to Welding (Table N5.4-1, AISC 360-22):		
Welder qualification records	Periodic	Verify welder qualification records and continuity records
WPS (Welding Procedure Specification) available	Periodic (E)	Verify welding procedures (WPS) and consumable certificates
Material identification	Periodic	Verify type and grade of material.
Welder identification	Periodic	Fabricator or erector, as applicable, shall maintain a system by which a welder who has welded a joint or member can be identified. Die stamping of members subjected to fatigue shall be prohibited unless approved by the engineer of record.
Fit-up groove welds	Periodic	Verify joint preparation, dimensions, cleanliness, tacking, and backing type and fit.
Fit-up of CJP welds to HSS T-, Y- and K- joints without backing	Periodic	Verify joint preparation, dimensions, cleanliness and tacking
Access holes	Periodic	Verify configuration and finish.
Fit-up of fillet welds	Periodic	Verify dimensions, cleanliness and tacking.
Welding equipment	Periodic	Check welding equipment
During Welding (Table N5.4-2, AISC 360-22):		
Use of qualified welders	Periodic	Verify that welders are appropriately qualified.
Control and handling of welding consumables	Periodic	Verify packaging and exposure control.
Cracked tack welds	Periodic	Verify that welding does not occur over cracked tack welds.
Environmental conditions	Periodic	Verify wind speed is within limits as well as precipitation and temperature.
WPS followed	Periodic	Verify items such as settings on welding equipment, travel speed, welding materials, shielding gas type/flow rate, preheat applied, interpass temperature maintained, and proper position.
Welding techniques	Periodic	Verify interpass and final cleaning, each pass is within profile limitations, and each pass meets quality requirements.
Steel headed stud anchors	Periodic (E)	Verify placement and installation of steel headed stud anchors. Verify all stud welds show a full 360° flash.
After Welding (Table N5.4-3, AISC 360-22):		
Welds cleaned	Periodic	Verify that welds have been properly cleaned.
Size, length, and location of welds	Periodic (E)	Verify the size, length and location of welds.
Welds meet visual acceptance criteria	Periodic (E)	Verify that welds meet acceptance criteria for crack prohibition, base metal fusion, crater cross section, profile, size, undercut, and porosity.
Arc strikes	Periodic (E)	Verify that arc strikes do not exist outside the permanent weld areas.
k-area	Periodic (E)	When welding of doubler plates, continuity plates or stiffeners has been performed in the k-area, visually inspect the web k-area for cracks within 3 in. of the weld.
Weld access holes in rolled heavy shapes and built-up heavy shapes (flange >2")	Periodic (E)	After rolled heavy shapes and built-up heavy shapes are welded, visually inspect the weld access holes for cracks.
Backing & weld tabs removed	Periodic (E)	If required on the approved construction documents, verify that back and weld tabs are removed.
Repair activities	Periodic (E)	Verify that repair activities are performed in accordance with AISC 360 and AWS D1.1.
Documentation	Periodic (E)	Document the acceptance or rejection of the welded joint or member.
Prohibited welds	Periodic	Verify no prohibited welds have been added without approval of the EOR.
Nondestructive Testing (Section N5.5, AISC 360-22):		
CJP welds (Risk Cat. III or IV)	Periodic (E)	UT testing shall be performed on all CJP groove welds in butt, T- and corner joints subject to transversely applied tension loading in materials 5/16-inch thick or greater.
Welded joints subject to fatigue	Periodic (E)	Welded joints subject to fatigue (see Table A-3.1 of AISC 360) shall have radiographic or UT testing.
Pre-production tests of steel headed stud anchors	Start of shift	Before production welding with a particular set-up and with a given size and type of stud, and at the beginning of each day's or shift's production, testing shall be performed on the first two studs that are welded per AWS 9.7.1. Studs shall exhibit full 360° flash with no evidence of undercut into the stud base. Each stud shall be bent to an angle of approximately 30° from its original axis per AWS 9.7.1.4.
Bend tests of steel headed stud anchors	Periodic	Test all studs that do not show a 360° flash and all studs that have been repaired by welding. Each stud shall be bent to an angle of approximately 15° from its original axis. Test per AWS 9.7.1.4. The direction of bending for studs with less than 360° flash shall be opposite to the missing point of the flash. Test a reasonable number of additional studs.
Prior to Bolting (Table N5.6-1, AISC 360-22):		
Certifications of fasteners	Periodic	Verify that manufacturer's certificates are available for fastener materials.
Fasteners marked	Periodic	Verify that fasteners have been marked in accordance with ASTM requirements.
Correct fasteners for joint	Periodic	Verify grade, type, and bolt length if threads are excluded from the shear plane.
Correct bolting procedure	Periodic	Verify correct bolting procedure is used for the joint detail.
Connecting elements	Periodic	Verify appropriate faying surface condition and hole preparation, if specified, meet requirements.
Pre-installation verification testing	Periodic	Observe and document verification testing by installation personnel for fastener assemblies and methods used.
Proper storage	Periodic	Verify proper storage of bolts, nuts, washers, and other fastener components.
During Bolting (Table N5.6-2, AISC 360-22):		
Fastener assemblies	Periodic	Verify that fastener assemblies are of suitable condition, placed in all holes, and washers and nuts are positioned as required.
Snug-tight prior to pretensioning	Periodic	Verify that joints are brought to snug-light condition prior to pretensioning operation.
Fastener component	Periodic	Verify that fastener component not turned by wrench is prevented from rotating.
Pretensioned fasteners	Periodic	Verify that fasteners are pretensioned in accordance with RCSC Specification, progressing systematically from the most rigid point toward the free edges.
After Bolting (Table N5.6-3, AISC 360-22):		
Documentation	Periodic (E)	Document the acceptance or rejection of bolted connections.
Other Steel Inspections (Section N5.7, N5.8, AISC 360-22: Tables J9.1, J11.1, AISC 341-22):		
Structural steel details	Periodic	All fabricated steel or steel frames shall be inspected to verify compliance with the details shown in the approved construction documents, such as braces, stiffeners, member locations, and proper application of joint details at each connection.
Anchor rods and other embedments supporting structural steel	Periodic	The QAI (quality assurance inspector) shall be on the premises during the placement of anchor rods and other embedments supporting structural steel for compliance with construction documents. Verify the diameter, grade, type, and length of the anchor rod or embedded item, and the extent or depth of embedment prior to placement of concrete.
Galvanized structural steel	Periodic	Verify that exposed cut surfaces of galvanized structural steel does not include cracks prior to galvanizing the surface.
Protected zones	Periodic	Verify that no holes or unapproved attachments are made within the protected zone *(see Table J9.1 of AISC 341-22)*. Ensure that protected zones are clearly marked in the field in a manner consistent with the structural drawings. If fireproofing is applied, confirm that markings are established both before and after application. Marking materials shall be non-damaging and compatible with the structural elements. Where markings will remain exposed to public view, they shall be non-permanent and removed at the end of construction.
Composite Construction — Steel & Concrete (Tables J10.1, J10.2, AISC 341-22):		
Prior to concrete placement	Continuous	Verify type and grade of reinforcing steel; carbon equivalent if other than A706 bars; proper reinforcing steel size, spacing and orientation; bar has not been re-bent in the field; bar is tied and supported as required; proper clearances have been provided; and composite member has required size.
During concrete placement	Periodic	Verify appropriate mix design; limitations on water added to truck/pump; and proper placement techniques are used to limit segregation.
After concrete placement	Periodic	Document that minimum concrete compressive strength was achieved at specified age.

Steel Roof and Floor Decks per IBC Section 1705.2.3 and SDI QA/QC - 2022

Item	Frequency	Detailed Instructions
Steel Roof and Floor Decks Prior to Placement (IBC 1705.2.3 and Table 1.1, SDI QA/QC 2022):		
Materials	Periodic (E)	Verify compliance of deck and all deck accessories with approved construction documents, including profiles, material properties, and base metal thickness.
Documentation	Periodic (E)	Document acceptance or rejection of deck and deck accessories.
Steel Roof and Floor Decks After Placement (IBC 1705.2.3 and Table 1.2, SDI QA/QC 2022):		
Compliance with construction documents	Periodic (E)	Verify compliance of deck and all deck accessories installation with construction documents. Verify deck materials are represented by the mill certifications that comply with the construction documents.
Documentation	Periodic (E)	Document acceptance or rejection of deck and deck accessories.
Steel Roof and Floor Decks Prior to Welding (IBC 1705.2.3 and Table 1.3, SDI QA/QC 2022):		
Welding procedure specifications (WPS)	Periodic	Verify that WPS is available.
Certifications of welding consumables	Periodic	Verify that manufacturer certifications for welding consumables are available.
Material identification	Periodic	Verify type and grade of materials to be welded.
Welding equipment	Periodic	Check welding equipment
Steel Roof and Floor Decks During Welding (IBC 1705.2.3 and Table 1.4, SDI QA/QC 2022):		
Use of qualified welders	Periodic	Verify that welders are appropriately qualified.
Control and handling of welding consumables	Periodic	Verify packaging and exposure control.
Environmental conditions	Periodic	Verify wind speed is within limits as well as precipitation and temperature.
WPS followed	Periodic	Verify items such as settings on welding equipment, travel speed, welding materials, shielding gas type/flow rate, preheat applied, interpass temperature maintained, and proper position.
Steel Roof and Floor Decks After Welding (IBC 1705.2.3 and Table 1.5, SDI QA/QC 2022):		
Size, length, and location of welds	Periodic	Verify size and location of welds, including support, sidelap, and perimeter welds.
Welds meet visual acceptance criteria	Periodic (E)	Verify weld meets visual acceptance criteria based upon weld/base-metal fusion, weld profiles, weld size, undercut, and porosity.
Repair activities	Periodic (E)	Verify that repair activities are acceptable.
Documentation	Periodic (E)	Document acceptance or rejection of welds
Steel Roof and Floor Decks Prior to Mechanical Fastening (IBC 1705.2.3 and Table 1.6, SDI QA/QC 2022):		
Pre-installation verification	Periodic	Verify manufacturer installation instructions are available for mechanical fasteners as well as the proper tools and storage for the fasteners.
Steel Roof and Floor Decks During Mechanical Fastening (IBC 1705.2.3 and Table 1.7, SDI QA/QC 2022):		
Fastener Placement	Periodic	Verify that fasteners are positioned as required and installed in accordance with the manufacturer's instructions.
Steel Roof and Floor Decks After Mechanical Fastening (IBC 1705.2.3 and Table 1.8, SDI QA/QC 2022):		
Spacing, type and installation of fasteners	Periodic (E)	Verify the spacing, type and installation of support, sidelap and perimeter fasteners.
Repair activities	Periodic (E)	Verify that repair activities are acceptable.
Documentation	Periodic (E)	Document acceptance or rejection of mechanical fasteners

Open-web Steel Joists and Joist Girders per IBC 1705.2.4

Item	Frequency	Detailed Instructions
End connections — welded or bolted	Periodic	Visual inspection to confirm that end connections conform to the approved construction documents.
Bridging — horizontal or diagonal	Periodic	Visual inspection to confirm that bridging is provided per the approved construction documents.

Concrete Construction per IBC Sections 1705.3

Item	Frequency	Detailed Instructions
Reinforcing steel,	Periodic	Verify prior to placing concrete that reinforcing is of specified type, grade and size; that it is free of ice, mud, oil, or other deleterious coatings that decrease bond. Prestressing reinforcement shall be free of mill scale, pitting, and excessive rust. A light coating of rust shall be permitted; that it is located and spaced properly; that hooks, bends, ties, stirrups and supplemental reinforcement are placed correctly; that lap lengths, stagger and offsets are provided; that all mechanical connections are installed per the manufacturer's instructions and/or evaluation report, and that minimum clear spacing requirements between bars and lap splices are in accordance with the Detailing provisions of the General Structural Notes.
Cast-in bolts & embeds	Periodic	Inspection of anchors or embeds cast in concrete.
Post-installed adhesive anchors installed in horizontally or upwardly inclined orientations to resist sustained tension loads	Continuous	All post-installed anchors/dowels shall be specially inspected as required by the approved ICC-ES report. Horizontally or upwardly inclined anchors that resist sustained tension loads require qualified installers.
Post-installed adhesive anchors that are NOT installed horizontally or upwardly inclined orientations to resist sustained tension loads	Periodic	Post-installed adhesive anchors/dowels shall be specially inspected as required by the approved ICC-ES report.
Post-installed mechanical anchors	Periodic	Post-installed anchors shall be specially inspected as required by the approved ICC-ES report.
Use of required mix design	Periodic	Verify that all mixes used comply with the approved construction documents; ACI 318: Ch.19, 26.4.3-26.4.4; and IBC 1904.1,1904.2.
Concrete sampling for strength tests, slump, air content, and temperature	Continuous	Samples for strength tests shall be taken in accordance with ASTM C172, cured per ASTM C31 and tested in accordance with ASTM C39 by a testing agency complying with ASTM C1077. Acceptance criteria for strength tests shall be per ACI 318 Section 26.12.3. For each mix placed, samples shall be taken not less than once a day, nor less than once for each 150 yd³ of concrete, nor less than once for each 5000 ft² of surface area for slabs or walls. At the time fresh concrete is sampled to fabricate specimens for strength tests, perform slump and air content tests and determine the temperature of the concrete.
Concrete placement	Continuous	
Curing temperature and techniques	Periodic	Verify that the ambient temperature for concrete is kept at > 50°F for at least 7 days after placement. High-early-strength concrete shall be kept at > 50°F for at least 3 days. Accelerated curing methods may be used (see ACI 318: 26.5.3). All concrete materials, reinforcement, forms, fillers, and ground shall be free from frost. In hot weather conditions ensure that appropriate measures are taken to avoid plastic shrinkage cracking and that the specified water/cement ratio is not exceeded.
In-situ strength verification	Periodic	Verify that adequate strength has been achieved prior to the removal of shores and forms or the stressing of post-tensioned tendons.
Formwork	Periodic	Verify that the forms are placed plumb and conform to the shapes, lines, and dimensions of the members as required by the approved construction documents.

Soils per IBC Section 1705.6

Item	Frequency	Detailed Instructions
Shallow foundations	Periodic	Verify subgrade is adequate to achieve design bearing capacity prior to placement of compacted fill or concrete.
Excavations	Periodic	Verify excavations extend to proper depth and material prior to placement of compacted fill or concrete.
Subgrade	Periodic	Verify that subgrade has been appropriately prepared prior to placing compacted fill.
Classification and testing of compacted fill materials	Periodic	Perform classification and testing of compacted fill materials. All materials shall be checked at each lift for proper classifications and gradations not less than once for each 10,000 ft² of surface area.
Placement of compacted fill	Continuous	Verify proper materials, densities and lift thicknesses during placement and compaction of compacted fill.
Aggregate Piers	Continuous	Confirm installation meets design requirements

Architectural Components (Seismic Design Category D, E, or F) per IBC Sections 1705.13.5

Item	Frequency	Detailed Instructions
Erection and fastening of exterior cladding or interior and exterior veneers	Periodic	Verify appropriate materials, fasteners, and attachment at commencement of work and at completion. (Not required if height of wall is less than 30 feet above grade or walking surface, or less than 5 psf)
Erection and fastening of interior and exterior nonbearing walls	Periodic	Verify appropriate materials, fasteners and attachment at commencement of work and at completion. (Not required if height of wall is less than 30 feet above grade or walking surface, or less than 15 psf)
Access floors	Periodic	Verify that anchorage complies with approved construction documents. Inspection of post-installed anchors shall comply with approved ICC-ES report.

HKS

ARCHITECT
HKS ARCHITECTS, INC.
90 SOUTH 400 WEST, #110
SALT LAKE CITY, UTAH 84101

CIVIL ENGINEER
GREAT BASIN ENGINEERING, INC
5746 SOUTH 1475 EAST
OGDEN, UTAH 84403

LANDSCAPE ARCHITECT
MGB+A STUDIO
145 WEST 200 SOUTH
SALT LAKE CITY, UTAH 84101

STRUCTURAL ENGINEER
REAVELEY ENGINEERS
250 EAST 200 SOUTH, SUITE 1000
SALT LAKE CITY, UTAH 84111

M/P/FP ENGINEER
RESOLUT GROUP
181 EAST 5600 SOUTH, SUITE 200
MURRAY, UTAH 84107

E/T ENGINEER
LYNK ENGINEERS
324 SOUTH STATE STREET, SUITE 400
SALT LAKE CITY, UTAH 84111

Intermountain Health

UTAH VALLEY SPORTS PERFORMANCE CENTER

PROJECT ADDRESS: WEST 880 NORTH 200 WEST PROVO, UTAH 84604

SEAL & SIGNATURE

KEY PLAN

REVISION

NO.	DESCRIPTION	DATE

HKS PROJECT NUMBER
27487.000

DATE
08/26/2026

ISSUE
DESIGN DEVELOPMENT

SHEET TITLE
GENERAL STRUCTURAL NOTES

SHEET NO.
SE002

© HKS, INC.

TITLE BLOCK VERSION: 20210930
MODEL: Autodesk Docs://27487.000_IH - UV Sports Performance Center_2025/S_IH_UV_Sports-Performance-Center_2025.rvt
PRINT DATE: 8/26/2026 5:19:45 PM TEMPLATE VERSION:

PLAN LEGEND

- FOOTING STEP
- FOOTING - CONTINUOUS
- FOOTING - THICKENED SLAB
- FOOTING - SQUARE FOOTING - RECTANGULAR FOOTING - MAT FOOTING
- 0" CHANGE IN ELEVATION
- SLAB BLOCK-OUT AT COLUMN
- CJ SLAB CONTROL/CONSTRUCTION JOINT
- SPECIAL SLAB OR DECK AREA
- SPECIAL SLAB OR DECK AREA
- SPECIAL SLAB OR DECK AREA
- RECESSED/DEPRESSED SLAB
- OPENING
- CONCRETE HOUSEKEEPING PAD
- INDICATES ROOF DAVIT ARM BASE
- INDICATES WINDOW WASHING TIE-BACK
- CONCRETE BEAM
- CONCRETE JOIST - ONE WAY PANS
- CONCRETE JOIST - TWO WAY PANS
- CONCRETE SUSPENDED SLAB
- CONCRETE OVER STEEL DECK
- STEEL DECK
- STEEL GRATE
- CONCRETE WALL
- CONCRETE WALL - RECESSED (FDTN PLAN) CONCRETE LINTEL (FRAMING PLAN)
- CONCRETE WALL - RECESSED AT DOOR
- CONCRETE PIER IN CONCRETE WALL. TOP OF PIER RECESSED BELOW SLAB.
- CONCRETE COLUMN
- CONCRETE JAMB COLUMN POURED MONOLITHIC WITH CONCRETE WALL
- MASONRY WALL
- MASONRY WALL - RECESSED (FDTN PLAN) MASONRY LINTEL (FRAMING PLAN)
- MASONRY COLUMN IN MASONRY WALL
- NON-BEARING MASONRY WALL
- NON-BEARING MASONRY LINTEL
- STEEL STUD WALL - STRUCTURAL
- STEEL HEADER IN STEEL STUD WALL
- BRICK WALL
- BRICK WALL - RECESSED (FDTN PLAN) BRICK LINTEL (FRAMING PLAN)
- BRICK COLUMN IN BRICK WALL
- WOOD STUD WALL
- WOOD HEADER IN WOOD STUD WALL
- NON-BEARING WOOD WALL. SEE ARCH
- STEEL/WOOD BEAM OR GIRDER
- STEEL/WOOD JOIST OR PURLIN
- STEEL BRACED FRAME - ABOVE
- STEEL BRACED FRAME
- STEEL BEAM OR GIRDER
- STEEL JOIST OR PURLIN
- STEEL ANGLE BRACE / KICKER. SEE D1/SF502 FOR SLAB EDGE KICKER. SEE -/--- FOR FRAME BRACE
- CROSS BRIDGING
- HORIZONTAL BRIDGING
- STEEL COLUMN - TUBE (HSS)
- STEEL COLUMN - WIDE FLANGE
- STEEL COLUMN - PIPE (HSS)
- WOOD COLUMN

STEEL FRAMING MEMBER DESIGNATION

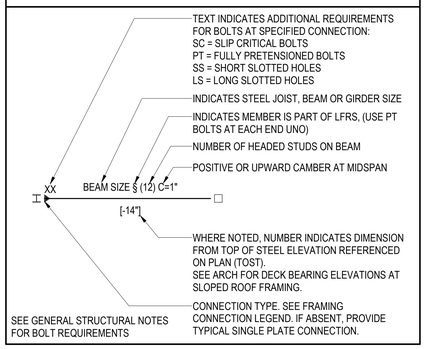

STEEL FRAMING CONNECTION LEGEND

- MOMENT FRAME CONNECTION (LFRS) A2/SF601
- GRAVITY BEAM MOMENT CONNECTION A2/SF601
- WELDED SINGLE PLATE COLLECTOR/CHORD CONNECTION B1/SF601
- STRAP PLATE COLLECTOR/CHORD CONNECTION AT BEAMS PARALLEL TO MARK. -/---
- DOUBLE ANGLE CONNECTION C1/SF601
- DROP-IN BEAM CONNECTION A4/SF603

ABBREVIATIONS

@	AT
AB	ANCHOR BOLT (S)
ABV	ABOVE
ALT	ALTERNATE
APPROX	APPROXIMATE
ARCH	ARCHITECT(URAL)
BLDG	BUILDING
BLW	BELOW
BM	BEAM
BOT	BOTTOM
BRB	BUCKLING-RESTRAINED BRACE
BRG	BEARING
BTWN	BETWEEN
CJ	CONSTRUCTION JOINT OR CONTROL JOINT
CJP	COMPLETE JOINT PENETRATION
CMU	CONCRETE MASONRY UNIT
COL	COLUMN
CONC	CONCRETE
CONST	CONSTRUCTION
CONT	CONTINUOUS
CONTR	CONTRACTOR
CTR	CENTER
D.B.	DECK BEARING
db	DIAMETER OF REINFORCING BAR
DBA	DEFORMED BAR ANCHORS
DBL	DOUBLE
DET	DETAIL
DIA (OR Ø)	DIAMETER
DIAG	DIAGONAL
DIM	DIMENSION
DK	DECK
DN	DOWN
DWG	DRAWING
DWL	DOWEL
E.F.	EACH FACE
E.J.	EXPANSION JOINT (SEISMIC SEPARATION JOINT)
E.W.	EACH WAY
EA	EACH
EL	ELEVATION
ELEC	ELECTRICAL
ELEV	ELEVATOR
ENG	ENGINEER
EQ	EQUAL
EQUIP	EQUIPMENT
EXIST (E)	EXISTING
EXP	EXPANSION / EXPOSED
EXT	EXTERIOR
F.D.	FLOOR DRAIN
F.F.	FINISH FLOOR
F.V.	FIELD VERIFY
FDTN	FOUNDATION
FIN	FINISH
FL	FLOOR
FT	FOOT
FTG	FOOTING
GA	GAUGE
GALV	GALVANIZED
GLB	GLU-LAMINATED BEAM
GR	GRADE
GSN	GENERAL STRUCTURAL NOTES
HB	HORIZONTAL BRIDGING
HORIZ	HORIZONTAL
HSA	HEADED STUD ANCHORS
HSS	HOLLOW STRUCTURAL STEEL
HT	HEIGHT
I.F.	INSIDE FACE
IBC	INTERNATIONAL BUILDING CODE
ICC	INTERNATIONAL CODE COUNCIL
IN	INCH
INSUL	INSULATION
INT	INTERIOR
JST	JOIST
JT	JOINT
K	KIPS - 1,000 POUNDS
KLF	KIPS PER LINEAL FOOT
KSF	KIPS PER SQUARE FOOT
KSI	KIPS PER SQUARE INCH
LBS	POUNDS
Ld, Lt, Lsb, Lsbt, Ldc, Lsc	SEE CONCRETE REINFORCING BAR DEVELOPMENT AND LAP LENGTH SCHEDULE
LF	LINEAL FOOT
LFRS	LATERAL FORCE RESISTING SYSTEM (SFRS & WFRS)
LLH	LONG LEG HORIZONTAL
LLV	LONG LEG VERTICAL
LSH	LONG SIDE HORIZONTAL
LSV	LONG SIDE VERTICAL
MAS	MASONRY
MAX	MAXIMUM
MCJ	MASONRY CONTROL JOINT
MECH	MECHANICAL
MFGR	MANUFACTURER
MIN	MINIMUM
MISC	MISCELLANEOUS
NIC	NOT IN CONTRACT
NORM	NORMAL
NTS	NOT TO SCALE
O.C.	ON CENTER
O.F.	OUTSIDE FACE
OPNG	OPENING
OPP	OPPOSITE
OWSJ	OPEN WEB STEEL JOIST
P.T.	POST-TENSIONED
PAF	POWDER ACTUATED FASTENER
PCF	POUNDS/CUBIC FOOT
PJP	PARTIAL JOINT PENETRATION
PL	PLATE
PLF	POUNDS/LINEAL FOOT
PNL	PANEL
PSF	POUNDS/SQ FOOT
PSI	POUNDS/SQ INCH

ABBREVIATIONS

R.D.	ROOF DRAIN
REINF	REINFORCING
REQD	REQUIRED
SDS	SELF-DRILLING SCREW
SFRS	SEISMIC FORCE RESISTING SYSTEM
SHT	SHEET
SI	SPECIAL INSPECTION (SP. INSP.)
SIM	SIMILAR
SOG	SLAB ON GRADE
SQ	SQUARE
STAG	STAGGERED
STD	STANDARD
STIFF	STIFFENER
STL	STEEL
STRUCT	STRUCTURAL
T & B	TOP AND BOTTOM
T.O.	TOP OF
TEMP	TEMPERATURE
THDS	THREADS
TOC	TOP OF CONCRETE
TOCP	TOP OF CONCRETE PIER
TOF	TOP OF FOOTING
TOS	TOP OF SLAB
TOST	TOP OF STEEL
TOW	TOP OF WALL
TYP	TYPICAL
UNO	UNLESS NOTED OTHERWISE
VERT	VERTICAL
W.P.	WORK POINT
W/	WITH
WF	WIDE FLANGE
WFRS	WIND FORCE RESISTING SYSTEM
WT	WEIGHT
WWF	WELDED WIRE FABRIC
YD	YARD

PLAN MARKS

BF-#	BRACED FRAME
CB-#	CONCRETE BEAM
CC-#	CONCRETE COLUMN
CCSS-#	CANTILEVERED CONCRETE SUSPENDED SLAB
CDP-#	CONCRETE DRILLED PIER
CFW-#	CONCRETE FOUNDATION WALL
CGB-#	CONCRETE GRADE BEAM
CJ-#	CONCRETE JOIST
CJC-#	CONCRETE JAMB COLUMN
CL-#	CONCRETE LINTEL
CP-#	CONCRETE PIER
CRW-#	CONCRETE RETAINING WALL
CSG-#	CONCRETE SLAB ON GRADE
CSH-#	CONCRETE SHEAR HEAD
CSS-#	CONCRETE SUSPENDED SLAB
CSW-#	CONCRETE SHEAR WALL
CW-#	CONCRETE WALL
FC#	CONTINUOUS FOOTING
FM#	MAT FOOTING
FR#	RECTANGULAR FOOTING
FS#	SQUARE FOOTING
FTS#	THICKENED SLAB FOOTING
HD-#	HOLD DOWN ANCHOR
MC-#	MASONRY COLUMN
MF-#	MOMENT FRAME
ML-#	MASONRY LINTEL
MP-#	MASONRY PIER
MW-#	MASONRY WALL
PTB-#	POST-TENSIONED CONCRETE BEAM
SBP-#	STEEL BASE PLATE
SC-#	STEEL COLUMN
SCP-#	STEEL CAP PLATE
SD-#	STEEL DECK
SDA-#	STEEL DECK ATTACHMENT
SG-#	STEEL GIRDER
SJ-#	STEEL JOIST
SND-#	SNOW DRIFT
WB-#	WOOD BEAM
WBW-#	WOOD BEARING WALL
WC-#	WOOD COLUMN
WD-#	WOOD DIAPHRAGM
WJ-#	WOOD JOIST
WSW-#	WOOD SHEAR WALL

STRUCTURAL DRAWING LIST

SHT NO.	SHT NAME
SE001	GENERAL STRUCTURAL NOTES
SE002	GENERAL STRUCTURAL NOTES
SE003	LEGENDS & ABBREVIATIONS
SB101	LEVEL 01 - OVERALL FOUNDATION PLAN
SB101A	LEVEL 01 - FOOTING & FOUNDATION PLAN-SECTOR A
SB101B	LEVEL 01 - FOOTING & FOUNDATION PLAN-SECTOR B
SB101C	LEVEL 01 - FOOTING & FOUNDATION PLAN-SECTOR C
SB501	TYPICAL FOOTING & FOUNDATION DETAILS
SB502	TYPICAL FOOTING & FOUNDATION DETAILS
SB601	CONCRETE SCHEDULES
SB602	REINFORCING SCHEDULES
SF102	LEVEL 02 - OVERALL FLOOR FRAMING PLAN
SF102A	LEVEL 02 - FLOOR FRAMING PLAN- SECTOR A
SF102B	LEVEL 02 - FLOOR FRAMING PLAN- SECTOR B
SF102C	LEVEL 02 - FLOOR FRAMING PLAN- SECTOR C
SF103	LEVEL 03 - OVERALL ROOF FRAMING PLAN
SF103A	LEVEL 03 - ROOF FRAMING PLAN- SECTOR A
SF103B	LEVEL 03 -ROOF FRAMING PLAN- SECTOR B
SF103C	LEVEL 03 - ROOF FRAMING PLAN- SECTOR C
SF201	LATERAL FRAME ELEVATIONS
SF202	TRUSS & JOISTS ELEVATIONS
SF203	SCREENWALL ELEVATIONS
SF204	SCREENWALL ELEVATIONS
SF205	SCREENWALL ELEVATIONS
SF211	SIDEPLATE BOLTED CONNECTIONS
SF212	SIDEPLATE BOLTED CONNECTIONS
SF213	SIDEPLATE BOLTED CONNECTIONS
SF214	SIDEPLATE BOLTED CONNECTIONS
SF215	SIDEPLATE BOLTED CONNECTIONS
SF216	SIDEPLATE BOLTED CONNECTIONS
SF217	SIDEPLATE BOLTED CONNECTIONS
SF218	BRACED FRAME DETAILS
SF219	BRACED FRAME DETAILS
SF221	MOMENT FRAME DETAILS
SF401	ENLARGED STAIR FRAMING PLANS
SF501	TYPICAL CONCRETE OVER STEEL DECK DETAILS
SF502	TYPICAL FLOOR FRAMING DETAILS
SF503	FLOOR FRAMING DETAILS
SF511	TYPICAL ROOF FRAMING DETAILS
SF513	ROOF FRAMING DETAILS
SF514	TYPICAL STEEL TUBE FRAMING DETAILS
SF531	TYPICAL ELEVATOR SUPPORT DETAILS
SF532	STAIR FRAMING DETAILS (CHANNELS)
SF533	PATIENT LIFT SUPPORT DETAILS
SF534	MEDICAL EQUIPMENT SUPPORT DETAILS
SF535	MEDICAL EQUIPMENT SUPPORT DETAILS
SF601	TYPICAL STEEL FRAMING SCHEDULES
SF602	STEEL COLUMN SCHEDULE
SF603	STEEL COLUMN DETAILS
SF604	STEEL DECK SCHEDULES
SW201	EXTERIOR CLADDING ELEVATIONS
SW202	EXTERIOR CLADDING ELEVATIONS
SW203	EXTERIOR CLADDING ELEVATIONS
SW204	EXTERIOR CLADDING ELEVATIONS
SW205	EXTERIOR CLADDING ELEVATIONS
SW301	EXTERIOR CLADDING SECTIONS
SW302	EXTERIOR CLADDING SECTIONS
SW501	EXTERIOR STEEL STUD DETAILS (ISOMETRICS)
SW502	EXTERIOR STEEL STUD DETAILS (STIFF CONNECTIONS)
SW503	EXTERIOR STEEL STUD DETAILS (DEFLECTION CONNECTIONS)
SW504	EXTERIOR STEEL STUD DETAILS (DRIFT CONNECTIONS)
SW505	EXTERIOR STEEL STUD DETAILS (WIND GIRT)
SW506	EXTERIOR STEEL STUD DETAILS
SW511	EXTERIOR STEEL STUD DETAILS (SOFFIT FRAMING)
SW601	EXTERIOR STUD WALL SCHEDULES & DETAILS
SW602	EXTERIOR STEEL STUD WALL OPENING SCHEDULE AND DETAILS
SW603	EXTERIOR STEEL STUD SCHEDULES AND DETAILS

HKS

ARCHITECT
HKS ARCHITECTS, INC.
90 SOUTH 400 WEST, #110
SALT LAKE CITY, UTAH 84101

CIVIL ENGINEER
GREAT BASIN ENGINEERING, INC
5746 SOUTH 1475 EAST
OGDEN, UTAH 84403

LANDSCAPE ARCHITECT
MGB+A STUDIO
145 WEST 200 SOUTH
SALT LAKE CITY, UTAH 84101

STRUCTURAL ENGINEER
REAVELEY ENGINEERS
250 EAST 200 SOUTH, SUITE 1000
SALT LAKE CITY, UTAH 84111

M/P/FP ENGINEER
RESOLUT GROUP
181 EAST 5600 SOUTH, SUITE 200
MURRAY, UTAH 84107

E/T ENGINEER
LYNK ENGINEERS
324 SOUTH STATE STREET, SUITE 400
SALT LAKE CITY, UTAH 84111

Intermountain Health

UTAH VALLEY SPORTS PERFORMANCE CENTER

PROJECT ADDRESS: WEST 880 NORTH 200 WEST PROVO, UTAH 84604

SEAL & SIGNATURE

KEY PLAN

REVISION

NO.	DESCRIPTION	DATE

HKS PROJECT NUMBER
27487.000

DATE
08/26/2026

ISSUE
DESIGN DEVELOPMENT

SHEET TITLE
LEGENDS & ABBREVIATIONS

SHEET NO.
SE003

© HKS, INC.

TITLE BLOCK VERSION: 20210930
PRINT DATE: 8/26/2026 5:19:41 PM TEMPLATE VERSION:
MODEL: Autodesk Docs://27487.000_IH_UV Sports Performance Center_2025/S_IH-UV_Sports-Performance-Center_2025.rvt

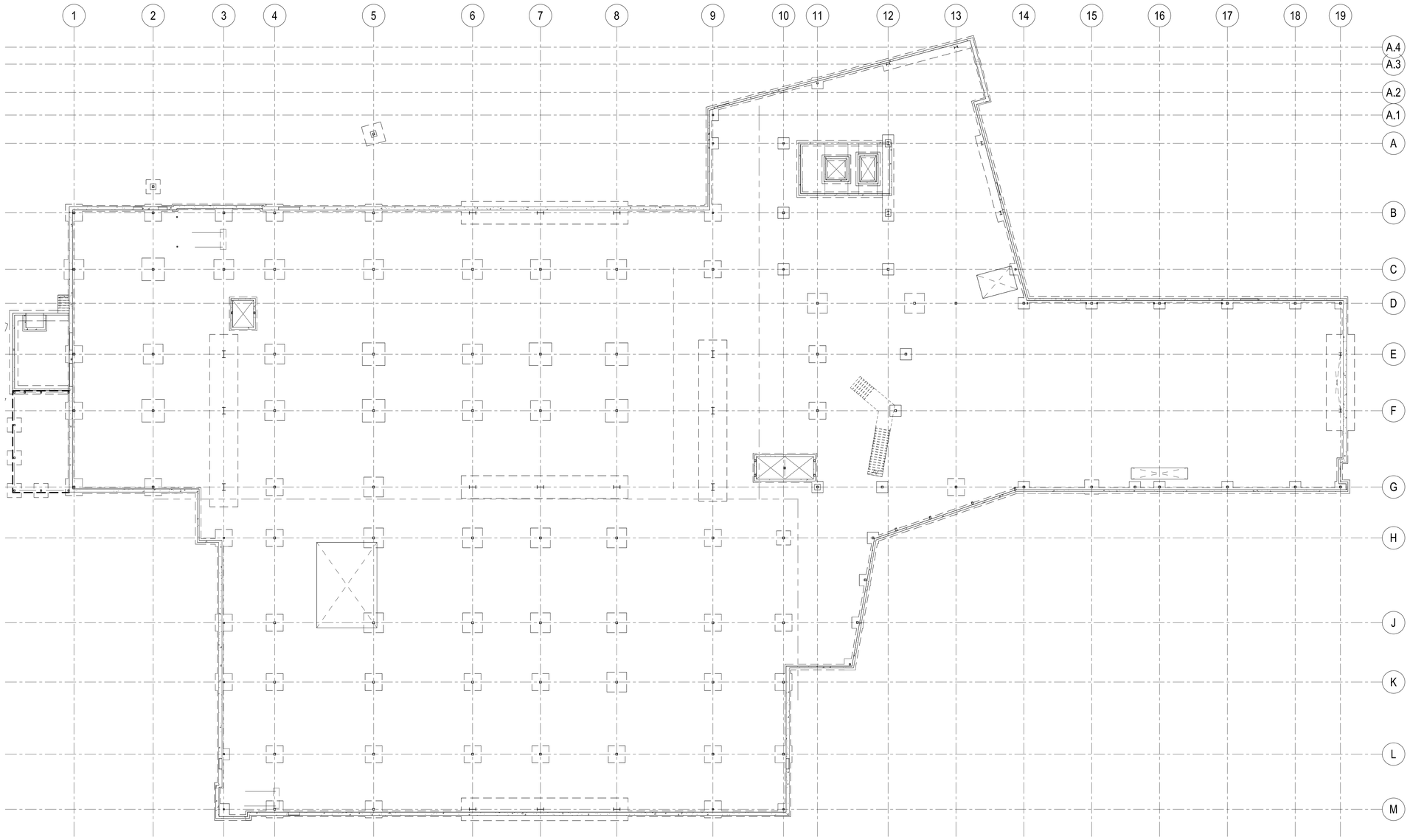

A1 / SB101 LEVEL 01 - OVERALL FOUNDATION PLAN

SCALE: 1/16" = 1'-0"

HKS

ARCHITECT
HKS ARCHITECTS, INC.
90 SOUTH 400 WEST, #110
SALT LAKE CITY, UTAH 84101

CIVIL ENGINEER
GREAT BASIN ENGINEERING, INC
5746 SOUTH 1475 EAST
OGDEN, UTAH 84403

LANDSCAPE ARCHITECT
MGB+A STUDIO
145 WEST 200 SOUTH
SALT LAKE CITY, UTAH 84101

STRUCTURAL ENGINEER
REAVELEY ENGINEERS
250 EAST 200 SOUTH, SUITE 1000
SALT LAKE CITY, UTAH 84111

M/P/FP ENGINEER
RESOLUT GROUP
181 EAST 5600 SOUTH, SUITE 200
MURRAY, UTAH 84107

E/T ENGINEER
LYNK ENGINEERS
324 SOUTH STATE STREET, SUITE 400
SALT LAKE CITY, UTAH 84111

Intermountain Health

UTAH VALLEY SPORTS PERFORMANCE CENTER

PROJECT ADDRESS: WEST 880 NORTH 200 WEST PROVO, UTAH 84604

SEAL & SIGNATURE

KEY PLAN

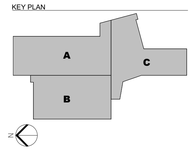

REVISION

NO.	DESCRIPTION	DATE

HKS PROJECT NUMBER
27487.000

DATE
08/26/2026

ISSUE
DESIGN DEVELOPMENT

SHEET TITLE
LEVEL 01 - OVERALL FOUNDATION PLAN

SHEET NO.
SB101

© HKS, INC.

TITLE BLOCK VERSION: 20210930
MODEL: Autodesk Docs://27487.000_IH - UV Sports Performance Center_2025/S_IH-UV_Sports-Performance-Center_2025.rvt
PRINT DATE: 8/26/2026 5:19:41 PM TEMPLATE VERSION:

SLAB ON GRADE PLAN NOTES

1. ALL SLABS ON GRADE SHALL BE 4 INCHES THICK, UNLESS NOTED OTHERWISE. SEE TYPICAL CONCRETE SLAB ON GRADE PROFILE DETAIL FOR SUBGRADE REQUIREMENTS.
2. SEE ARCHITECTURAL, CIVIL AND LANDSCAPE DRAWINGS FOR EXTERIOR CONCRETE WORK AT DOORS, SIDEWALKS, ETC.
3. SEE ARCHITECTURAL DRAWINGS AND FINISH SCHEDULE FOR SLAB DEPRESSIONS, SLOPES TO DRAINS AND SLAB AREAS TO RECEIVE FLOOR TILE.
4. SEE TYPICAL CONCRETE SLAB ON GRADE DETAILS FOR CONSTRUCTION JOINTS, CONTROL JOINTS AND ADDITIONAL SLAB REINFORCING C2/SB501.
5. SUBMIT SLAB ON GRADE CONTROL JOINT PLAN FOR REVIEW.
6. PROVIDE HOUSEKEEPING PADS AND CURBS PER DETAIL C4/SB501. VERIFY DIMENSIONS AND LOCATIONS OF CURBS AND PADS WITH MECHANICAL AND EQUIPMENT SUPPLIER.

FOOTING & FOUNDATION PLAN NOTES

1. SEE ARCHITECTURAL, CIVIL AND LANDSCAPE DRAWINGS FOR EXTERIOR CONCRETE RETAINING AND / OR SITE WALLS NOT SHOWN ON THE STRUCTURAL DRAWINGS.
2. SEE D1/SB501 FOR TYPICAL STEP DETAIL AT CONTINUOUS FOOTINGS.
3. SEE C1/SB501 FOR STEP DETAIL AT MAT FOOTINGS.
4. PROVIDE REINFORCEMENT AT WALL ENDS, INTERSECTIONS AND OPENINGS PER TYPICAL DETAILS D2/SB601 AND C2/SB601.
5. DOWEL ALL CONCRETE WALLS TO FOOTING PER TYPICAL DETAIL D2/SB501.
6. PROVIDE COMPACTED STRUCTURAL FILL UNDER ALL CONCRETE FOOTINGS PER TYPICAL DETAIL A5/SB501.

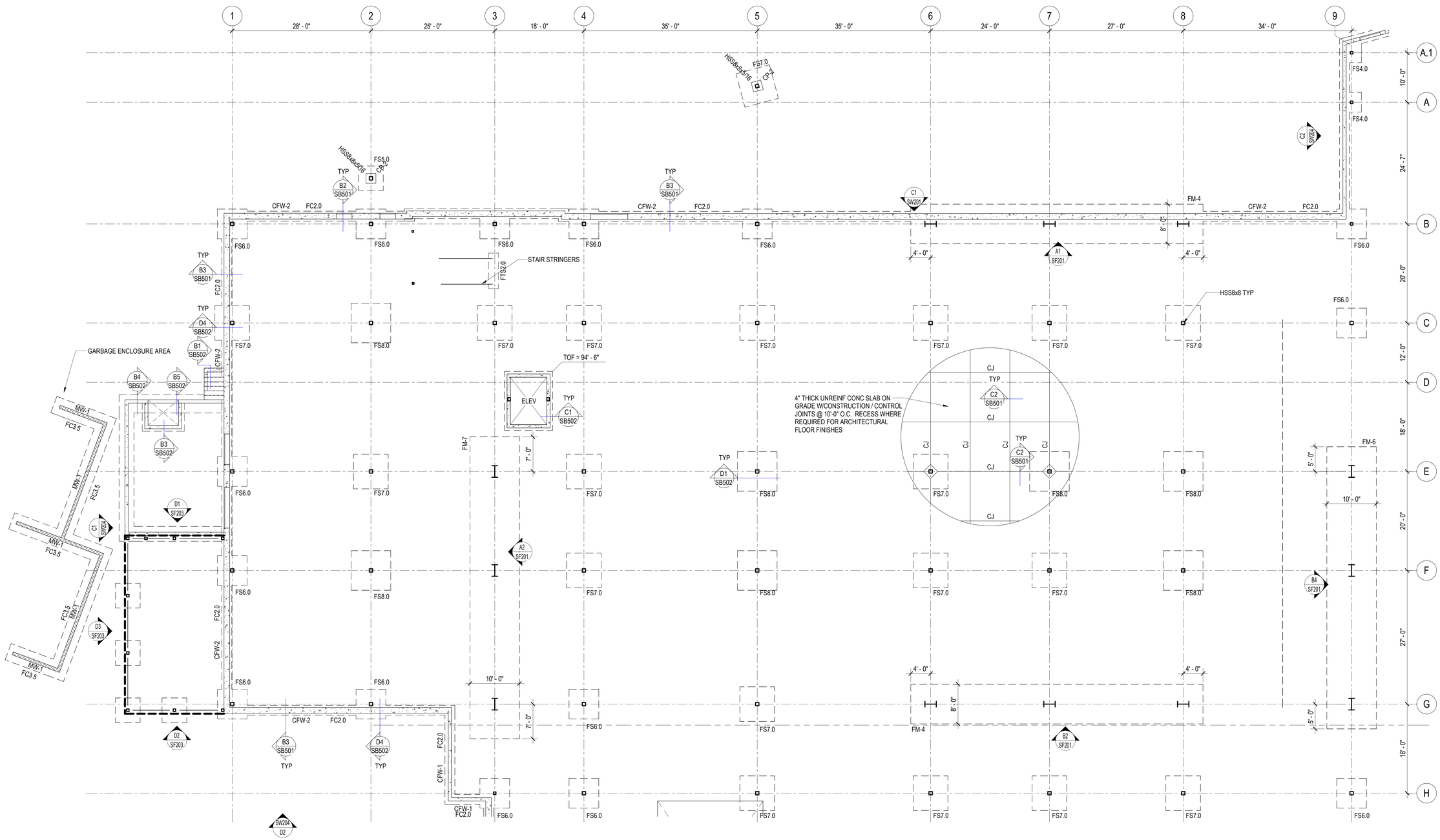

A1 SB101A LEVEL 01 - FOOTING & FOUNDATION PLAN- SECTOR A

SCALE: 1/8" = 1'-0"

© HKS, INC.

HKS

ARCHITECT
HKS ARCHITECTS, INC.
90 SOUTH 400 WEST, #110
SALT LAKE CITY, UTAH 84101

CIVIL ENGINEER
GREAT BASIN ENGINEERING, INC
5746 SOUTH 1475 EAST
OGDEN, UTAH 84403

LANDSCAPE ARCHITECT
MGB+A STUDIO
145 WEST 200 SOUTH
SALT LAKE CITY, UTAH 84101

STRUCTURAL ENGINEER
REAVELEY ENGINEERS
250 EAST 200 SOUTH, SUITE 1000
SALT LAKE CITY, UTAH 84111

M/P/FP ENGINEER
RESOLUT GROUP
181 EAST 5600 SOUTH, SUITE 200
MURRAY, UTAH 84107

E/T ENGINEER
LYNK ENGINEERS
324 SOUTH STATE STREET, SUITE 400
SALT LAKE CITY, UTAH 84111

Intermountain Health

UTAH VALLEY SPORTS PERFORMANCE CENTER

PROJECT ADDRESS: WEST 880 NORTH 200 WEST PROVO, UTAH 84604

SEAL & SIGNATURE

KEY PLAN

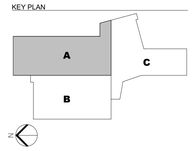

REVISION

NO.	DESCRIPTION	DATE

HKS PROJECT NUMBER
27487.000

DATE
08/26/2026

ISSUE
DESIGN DEVELOPMENT

SHEET TITLE
LEVEL 01 - FOOTING & FOUNDATION PLAN- SECTOR A

SHEET NO.
SB101A

TITLE BLOCK VERSION: 20210930
MODEL: Autodesk Docs://27487.000_H-LV Sports Performance Center_2025/S_H-LV_Sports Performance Center_2025.rvt
PRINT DATE: 8/26/2026 5:19:42 PM TEMPLATE VERSION:

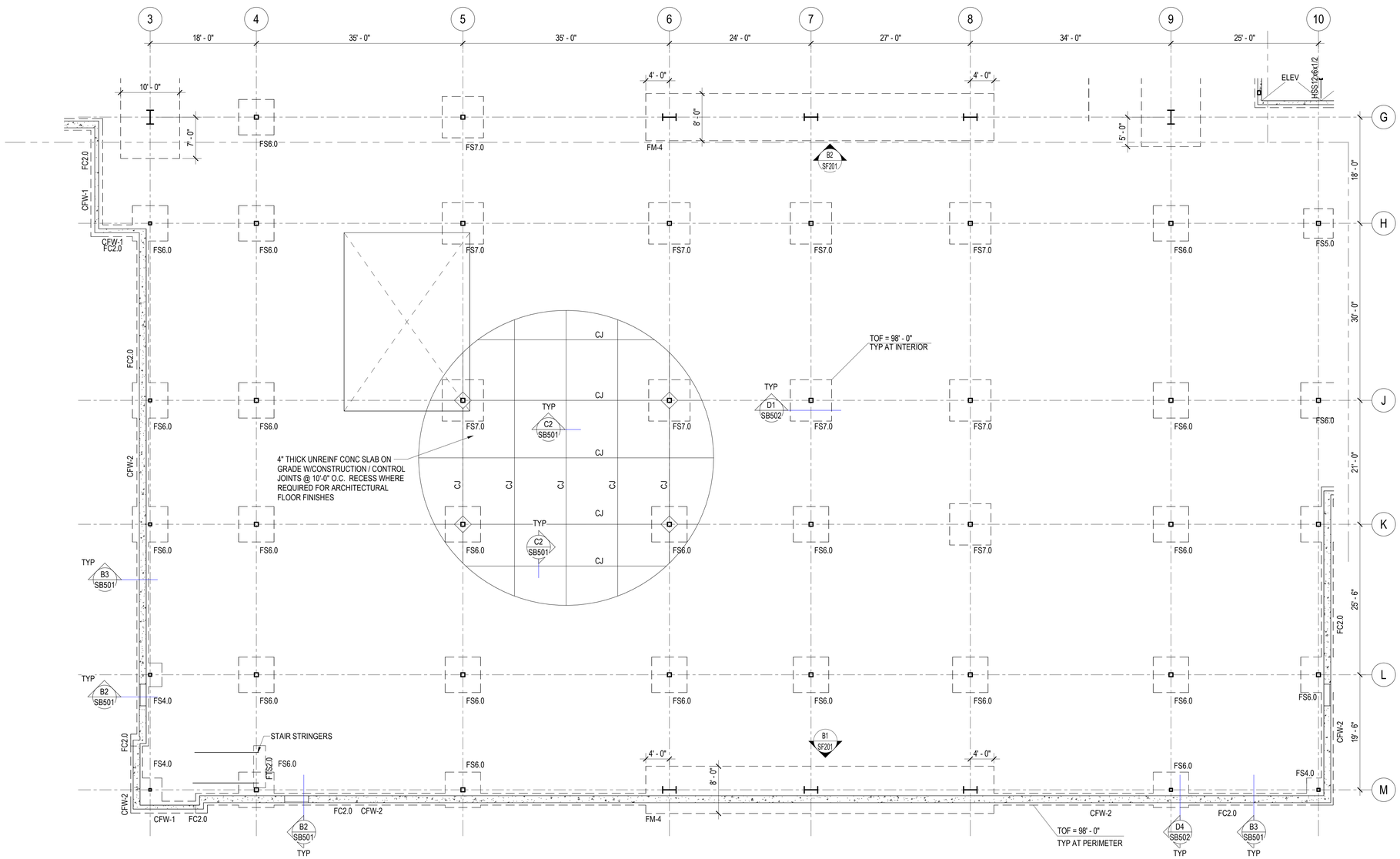

A1 SB101B LEVEL 01 - FOOTING & FOUNDATION PLAN- SECTOR B

SCALE: 1/8" = 1'-0"

FOOTING & FOUNDATION PLAN NOTES

1. SEE ARCHITECTURAL, CIVIL AND LANDSCAPE DRAWINGS FOR EXTERIOR CONCRETE RETAINING AND / OR SITE WALLS NOT SHOWN ON THE STRUCTURAL DRAWINGS.
2. SEE D1/SB501 FOR TYPICAL STEP DETAIL AT CONTINUOUS FOOTINGS.
3. SEE C1/SB501 FOR STEP DETAIL AT MAT FOOTINGS.
4. PROVIDE REINFORCEMENT AT WALL ENDS, INTERSECTIONS AND OPENINGS PER TYPICAL DETAILS D2/SB601 AND C2/SB601.
5. DOWEL ALL CONCRETE WALLS TO FOOTING PER TYPICAL DETAIL D2/SB501.
6. PROVIDE COMPACTED STRUCTURAL FILL UNDER ALL CONCRETE FOOTINGS PER TYPICAL DETAIL A5/SB501.

SLAB ON GRADE PLAN NOTES

1. ALL SLABS ON GRADE SHALL BE 4 INCHES THICK, UNLESS NOTED OTHERWISE. SEE TYPICAL CONCRETE SLAB ON GRADE PROFILE DETAIL FOR SUBGRADE REQUIREMENTS.
2. SEE ARCHITECTURAL, CIVIL AND LANDSCAPE DRAWINGS FOR EXTERIOR CONCRETE WORK AT DOORS, SIDEWALKS, ETC.
3. SEE ARCHITECTURAL DRAWINGS AND FINISH SCHEDULE FOR SLAB DEPRESSIONS, SLOPES TO DRAINS AND SLAB AREAS TO RECEIVE FLOOR TILE.
4. SEE TYPICAL CONCRETE SLAB ON GRADE DETAILS FOR CONSTRUCTION JOINTS, CONTROL JOINTS AND ADDITIONAL SLAB REINFORCING C2/SB501.
5. SUBMIT SLAB ON GRADE CONTROL JOINT PLAN FOR REVIEW.
6. PROVIDE HOUSEKEEPING PADS AND CURBS PER DETAIL C4/SB501. VERIFY DIMENSIONS AND LOCATIONS OF CURBS AND PADS WITH MECHANICAL AND EQUIPMENT SUPPLIER.

HKS

ARCHITECT
HKS ARCHITECTS, INC.
90 SOUTH 400 WEST, #110
SALT LAKE CITY, UTAH 84101

CIVIL ENGINEER
GREAT BASIN ENGINEERING, INC
5746 SOUTH 1475 EAST
OGDEN, UTAH 84403

LANDSCAPE ARCHITECT
MGB+A STUDIO
145 WEST 200 SOUTH
SALT LAKE CITY, UTAH 84101

STRUCTURAL ENGINEER
REAVELEY ENGINEERS
250 EAST 200 SOUTH, SUITE 1000
SALT LAKE CITY, UTAH 84111

M/P/FP ENGINEER
RESOLUT GROUP
181 EAST 5600 SOUTH, SUITE 200
MURRAY, UTAH 84107

E/T ENGINEER
LYNK ENGINEERS
324 SOUTH STATE STREET, SUITE 400
SALT LAKE CITY, UTAH 84111

Intermountain Health

UTAH VALLEY SPORTS PERFORMANCE CENTER

PROJECT ADDRESS: WEST 880 NORTH 200 WEST PROVO, UTAH 84604

SEAL & SIGNATURE

KEY PLAN

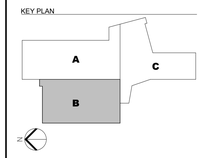

REVISION

NO.	DESCRIPTION	DATE

HKS PROJECT NUMBER
27487.000

DATE
08/26/2026

ISSUE
DESIGN DEVELOPMENT

SHEET TITLE
LEVEL 01 - FOOTING & FOUNDATION PLAN- SECTOR B

SHEET NO.
SB101B

© HKS, INC.

TITLE BLOCK VERSION: 20210930
MODEL: Autodesk Docs://27487.000_H - UV Sports Performance Center 2025/S_H-UV_Sports-Performance-Center_2025.rvt
PRINT DATE: 8/26/2026 5:19:43 PM TEMPLATE VERSION:

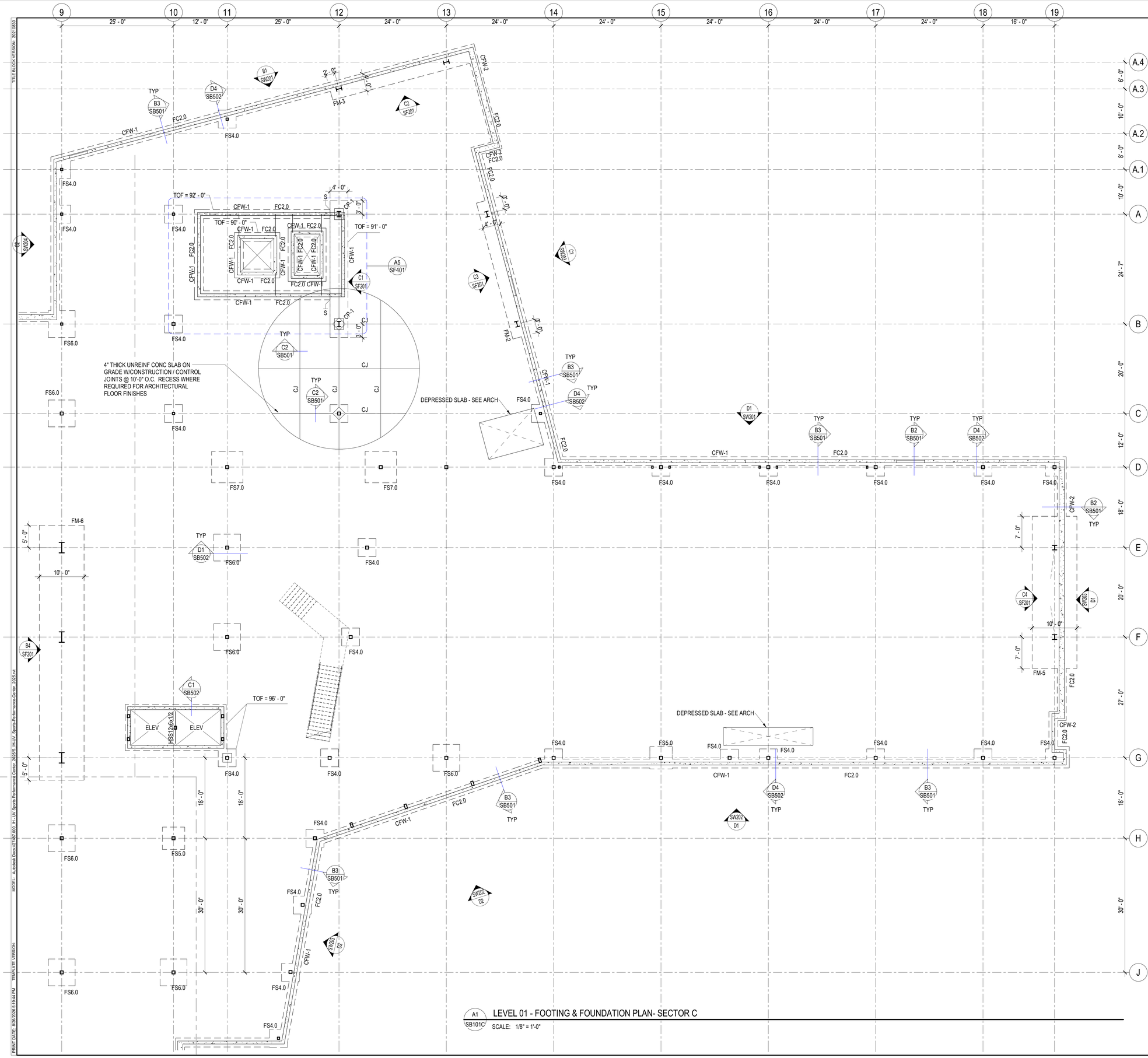

A1 SB101C LEVEL 01 - FOOTING & FOUNDATION PLAN- SECTOR C

SCALE: 1/8" = 1'-0"

FOOTING & FOUNDATION PLAN NOTES

1. SEE ARCHITECTURAL, CIVIL AND LANDSCAPE DRAWINGS FOR EXTERIOR CONCRETE RETAINING AND / OR SITE WALLS NOT SHOWN ON THE STRUCTURAL DRAWINGS.
2. SEE D1/SB501 FOR TYPICAL STEP DETAIL AT CONTINUOUS FOOTINGS.
3. SEE C1/SB501 FOR STEP DETAIL AT MAT FOOTINGS.
4. PROVIDE REINFORCEMENT AT WALL ENDS, INTERSECTIONS AND OPENINGS PER TYPICAL DETAILS D2/SB601 AND C2/SB601.
5. DOWEL ALL CONCRETE WALLS TO FOOTING PER TYPICAL DETAIL D2/SB501.
6. PROVIDE COMPACTED STRUCTURAL FILL UNDER ALL CONCRETE FOOTINGS PER TYPICAL DETAIL A5/SB501.

SLAB ON GRADE PLAN NOTES

1. ALL SLABS ON GRADE SHALL BE 4 INCHES THICK, UNLESS NOTED OTHERWISE. SEE TYPICAL CONCRETE SLAB ON GRADE PROFILE DETAIL FOR SUBGRADE REQUIREMENTS.
2. SEE ARCHITECTURAL, CIVIL AND LANDSCAPE DRAWINGS FOR EXTERIOR CONCRETE WORK AT DOORS, SIDEWALKS, ETC.
3. SEE ARCHITECTURAL DRAWINGS AND FINISH SCHEDULE FOR SLAB DEPRESSIONS, SLOPES TO DRAINS AND SLAB AREAS TO RECEIVE FLOOR TILE.
4. SEE TYPICAL CONCRETE SLAB ON GRADE DETAILS FOR CONSTRUCTION JOINTS, CONTROL JOINTS AND ADDITIONAL SLAB REINFORCING C2/SB501.
5. SUBMIT SLAB ON GRADE CONTROL JOINT PLAN FOR REVIEW.
6. PROVIDE HOUSEKEEPING PADS AND CURBS PER DETAIL C4/SB501. VERIFY DIMENSIONS AND LOCATIONS OF CURBS AND PADS WITH MECHANICAL AND EQUIPMENT SUPPLIER.

HKS

ARCHITECT
HKS ARCHITECTS, INC.
90 SOUTH 400 WEST, #110
SALT LAKE CITY, UTAH 84101

CIVIL ENGINEER
GREAT BASIN ENGINEERING, INC
5746 SOUTH 1475 EAST
OGDEN, UTAH 84403

LANDSCAPE ARCHITECT
MGB+A STUDIO
145 WEST 200 SOUTH
SALT LAKE CITY, UTAH 84101

STRUCTURAL ENGINEER
REAVELEY ENGINEERS
250 EAST 200 SOUTH, SUITE 1000
SALT LAKE CITY, UTAH 84111

M/P/FP ENGINEER
RESOLUT GROUP
181 EAST 5600 SOUTH, SUITE 200
MURRAY, UTAH 84107

E/T ENGINEER
LYNK ENGINEERS
324 SOUTH STATE STREET, SUITE 400
SALT LAKE CITY, UTAH 84111

Intermountain Health

UTAH VALLEY SPORTS PERFORMANCE CENTER

PROJECT ADDRESS: WEST 880 NORTH 200 WEST PROVO, UTAH 84604

SEAL & SIGNATURE

KEY PLAN

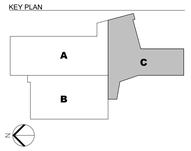

REVISION

NO.	DESCRIPTION	DATE

HKS PROJECT NUMBER
27487.000

DATE
08/26/2026

ISSUE
DESIGN DEVELOPMENT

SHEET TITLE
LEVEL 01 - FOOTING & FOUNDATION PLAN- SECTOR C

SHEET NO.
SB101C

© HKS, INC.

TITLE BLOCK VERSION: 20210930
MODEL: Autodesk Docs://27487.000_IH_UV Sports Performance Center_2025/S_IHUV_Sports-Performance-Center_2025.rvt
TEMPLATE VERSION:
PRINT DATE: 8/26/2026 5:19:44 PM

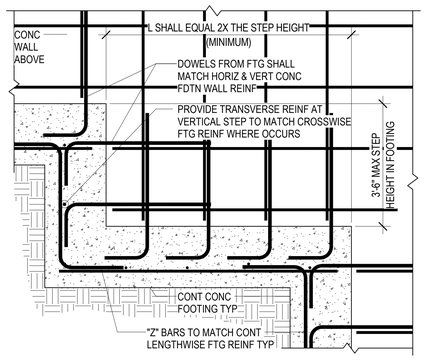

D1 / SB501 TYPICAL STEP DETAIL AT CONTINUOUS FOOTING
NO SCALE

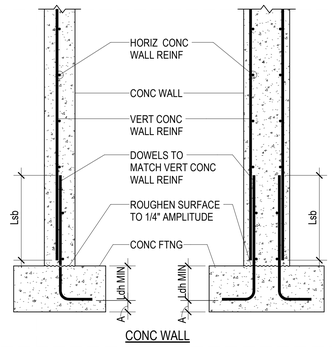

CONC WALL

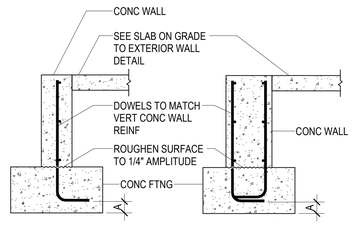

CONC WALL (STEM)

D2 / SB501 TYPICAL CONCRETE WALL CONNECTION TO CONCRETE FOOTING
NO SCALE

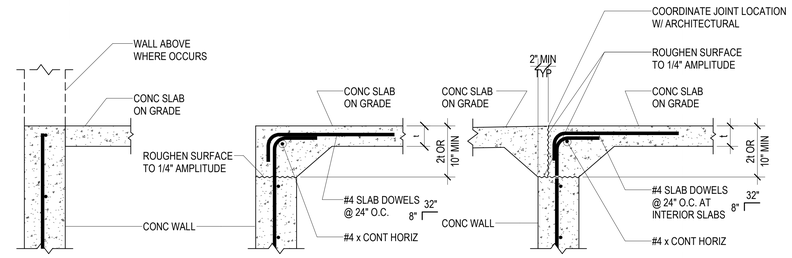

D4 / SB501 TYPICAL CONCRETE SLAB ON GRADE TO CONCRETE WALL
NO SCALE

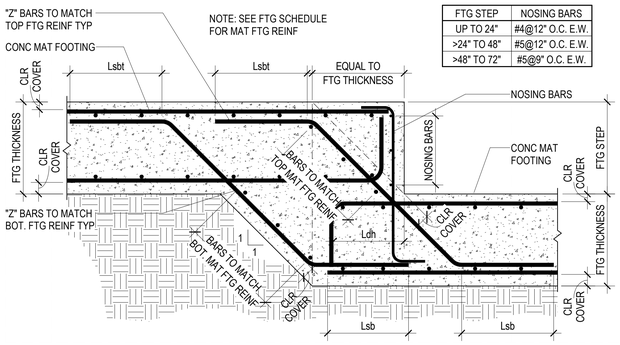

FTG STEP	NOSING BARS
UP TO 24"	#4@12" O.C. E.W.
>24" TO 48"	#5@12" O.C. E.W.
>48" TO 72"	#5@9" O.C. E.W.

C1 / SB501 TYPICAL STEP DETAIL AT MAT FOOTING
NO SCALE

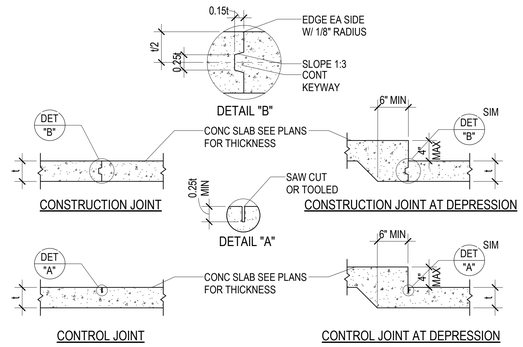

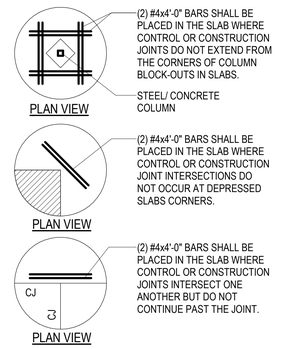

C2 / SB501 TYPICAL CONCRETE SLAB ON GRADE DETAILS
NO SCALE

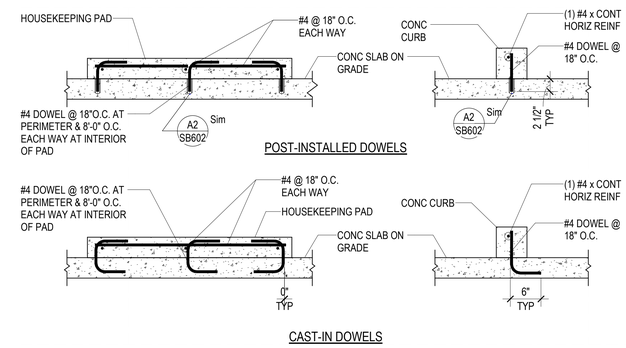

C4 / SB501 TYPICAL HOUSEKEEPING PAD & CURB DETAILS AT CONCRETE SLAB ON GRADE
NO SCALE

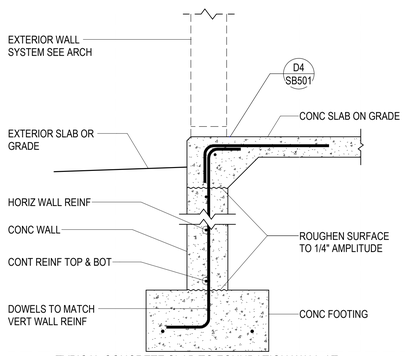

B1 / SB501 TYPICAL CONCRETE SLAB TO FOUNDATION WALL AT CURTAIN WALL
NO SCALE

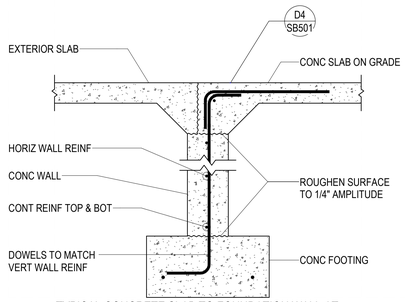

B2 / SB501 TYPICAL CONCRETE SLAB TO FOUNDATION WALL AT DOOR OPENING
NO SCALE

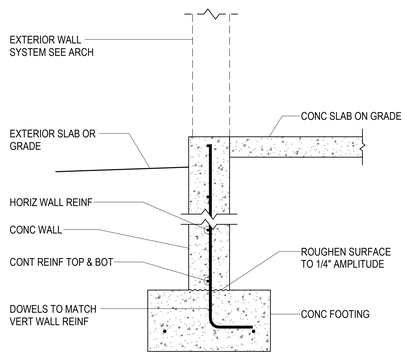

B3 / SB501 TYPICAL CONCRETE WALL ON CONCRETE FOOTING
NO SCALE

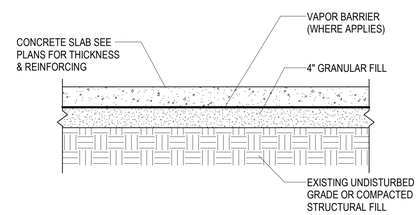

B5 / SB501 TYPICAL CONCRETE SLAB ON GRADE PROFILE
NO SCALE

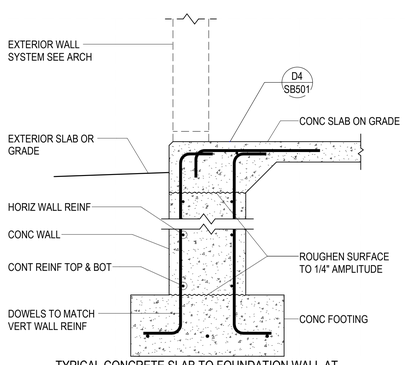

A1 / SB501 TYPICAL CONCRETE SLAB TO FOUNDATION WALL AT CURTAIN WALL
NO SCALE

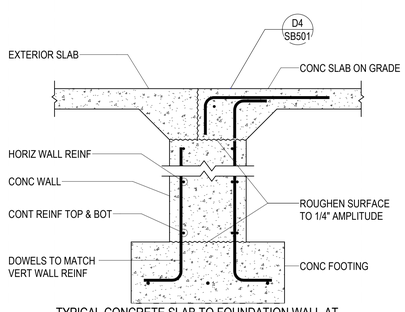

A2 / SB501 TYPICAL CONCRETE SLAB TO FOUNDATION WALL AT DOOR OPENING
NO SCALE

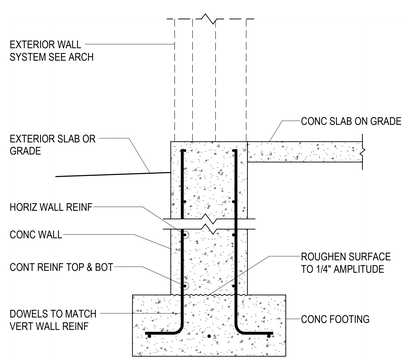

A3 / SB501 TYPICAL CONCRETE WALL ON CONCRETE FOOTING
NO SCALE

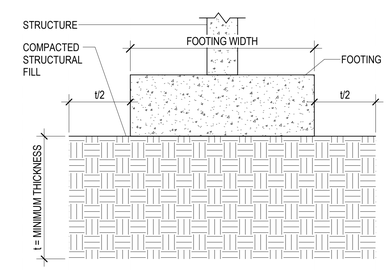

COMPACTED STRUCTURAL FILL:
SEE EARTHWORK SECTION OF THE GENERAL STRUCTURAL NOTES.

A5 / SB501 TYPICAL COMPACTED STRUCTURAL FILL DETAIL
NO SCALE

© HKS, INC.

HKS

ARCHITECT
HKS ARCHITECTS, INC.
90 SOUTH 400 WEST, #110
SALT LAKE CITY, UTAH 84101

CIVIL ENGINEER
GREAT BASIN ENGINEERING, INC
5746 SOUTH 1475 EAST
OGDEN, UTAH 84403

LANDSCAPE ARCHITECT
MGB+A STUDIO
145 WEST 200 SOUTH
SALT LAKE CITY, UTAH 84101

STRUCTURAL ENGINEER
REAVELEY ENGINEERS
250 EAST 200 SOUTH, SUITE 1000
SALT LAKE CITY, UTAH 84111

M/P/FP ENGINEER
RESOLUT GROUP
181 EAST 5600 SOUTH, SUITE 200
MURRAY, UTAH 84107

E/T ENGINEER
LYNK ENGINEERS
324 SOUTH STATE STREET, SUITE 400
SALT LAKE CITY, UTAH 84111

Intermountain Health

UTAH VALLEY SPORTS PERFORMANCE CENTER

PROJECT ADDRESS: WEST 880 NORTH 200 WEST PROVO, UTAH 84604

SEAL & SIGNATURE

KEY PLAN

REVISION

NO.	DESCRIPTION	DATE

HKS PROJECT NUMBER
27487.000
DATE
08/26/2026
ISSUE
DESIGN DEVELOPMENT
SHEET TITLE
TYPICAL FOOTING & FOUNDATION DETAILS
SHEET NO.
SB501

TITLE BLOCK VERSION: 20210930
MODEL: Autodesk Docs:27487.000_HL-UV Sports Performance Center_2025.rvt
PRINT DATE: 8/26/2026 5:19:44 PM TEMPLATE VERSION:

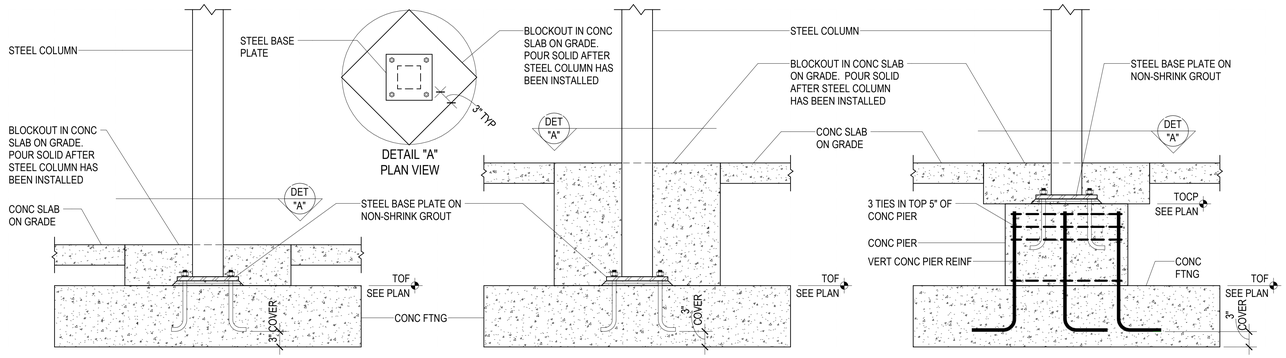

D1 / SB502 TYPICAL STEEL COLUMN CONNECTION TO CONCRETE FOOTING/CONCRETE PIER

NO SCALE

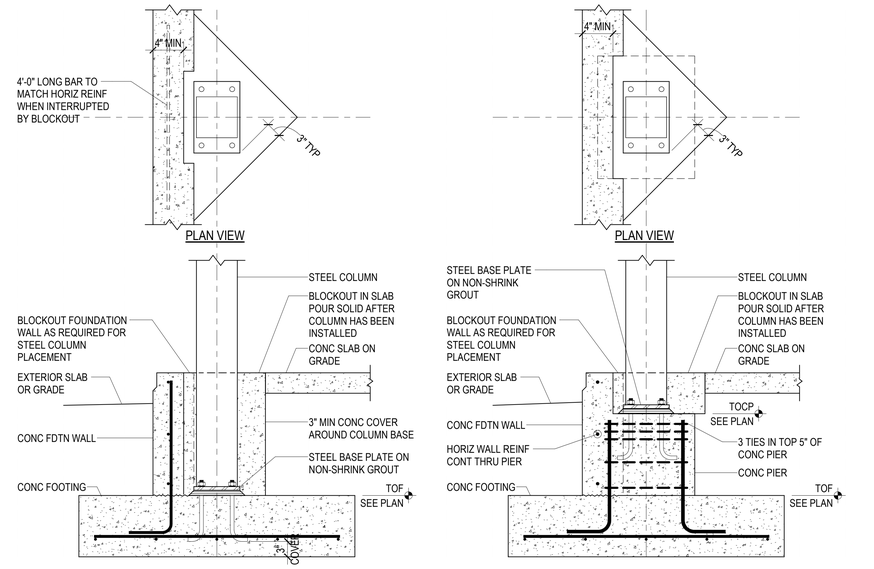

D4 / SB502 TYPICAL STEEL COLUMN BASE AGAINST CONCRETE FOUNDATION WALL

NO SCALE

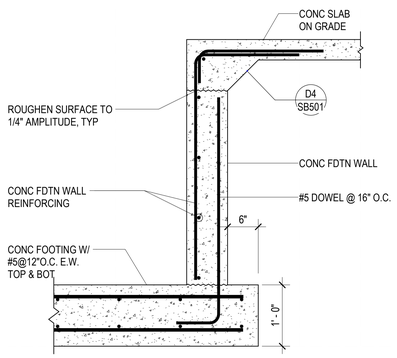

C1 / SB502 TYPICAL ELEVATOR PIT DETAIL

NO SCALE

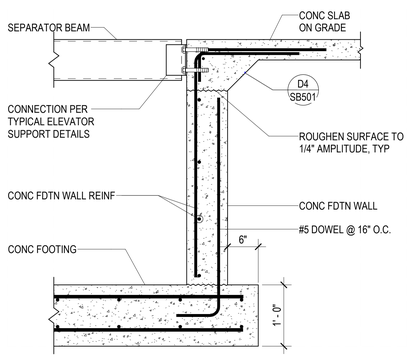

C2 / SB502 TYPICAL ELEVATOR PIT DETAIL WITH SEPARATOR BEAM

NO SCALE

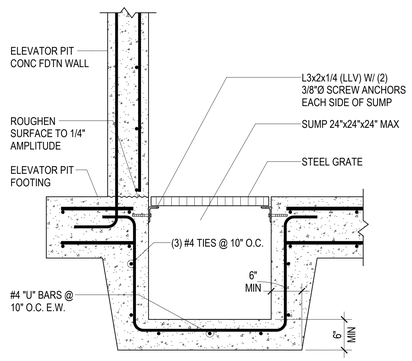

C3 / SB502 TYPICAL SUMP AT ELEVATOR PIT WALL

NO SCALE

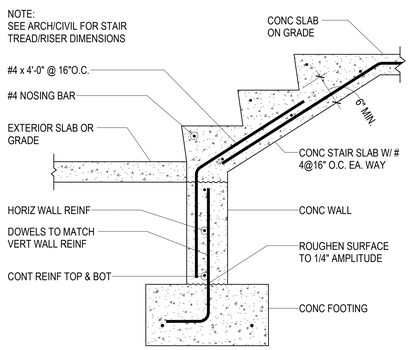

B1 / SB502 STAIR DETAIL

NO SCALE

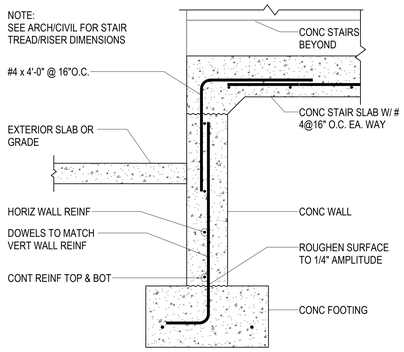

B2 / SB502 STAIR DETAIL

NO SCALE

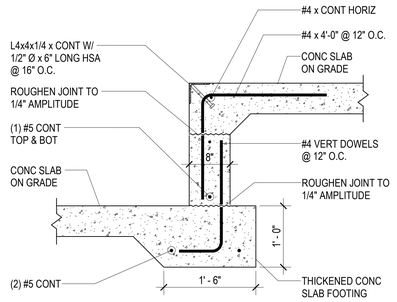

B3 / SB502 TYPICAL DOCK LEVELER PIT DETAIL

NO SCALE

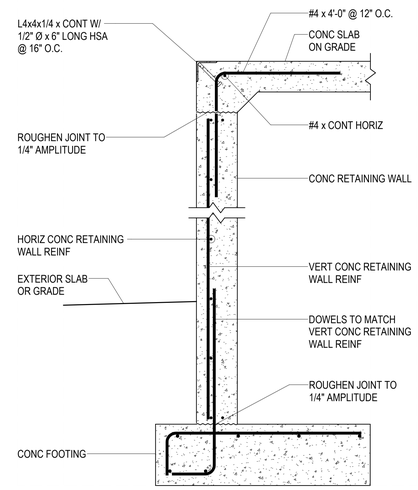

B4 / SB502 CONCRETE RETAINING WALL AT DOCK

NO SCALE

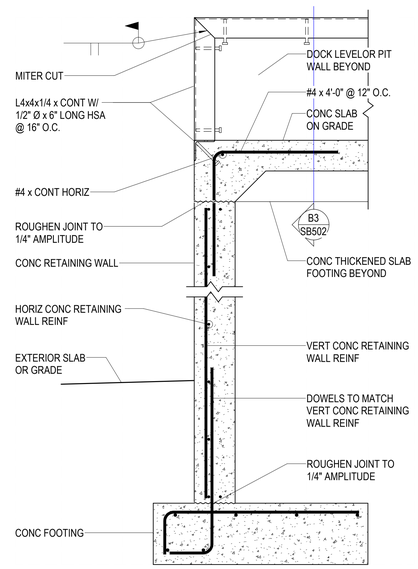

B5 / SB502 CONCRETE RETAINING WALL AT DOCK LEVELER

NO SCALE

HKS

ARCHITECT
HKS ARCHITECTS, INC.
90 SOUTH 400 WEST, #110
SALT LAKE CITY, UTAH 84101

CIVIL ENGINEER
GREAT BASIN ENGINEERING, INC
5746 SOUTH 1475 EAST
OGDEN, UTAH 84403

LANDSCAPE ARCHITECT
MGB+A STUDIO
145 WEST 200 SOUTH
SALT LAKE CITY, UTAH 84101

STRUCTURAL ENGINEER
REAVELEY ENGINEERS
250 EAST 200 SOUTH, SUITE 1000
SALT LAKE CITY, UTAH 84111

M/P/FP ENGINEER
RESOLUT GROUP
181 EAST 5600 SOUTH, SUITE 200
MURRAY, UTAH 84107

E/T ENGINEER
LYNK ENGINEERS
324 SOUTH STATE STREET, SUITE 400
SALT LAKE CITY, UTAH 84111

Intermountain Health

UTAH VALLEY SPORTS PERFORMANCE CENTER

PROJECT ADDRESS: WEST 880 NORTH 200 WEST PROVO, UTAH 84604

SEAL & SIGNATURE

KEY PLAN

REVISION

NO.	DESCRIPTION	DATE

HKS PROJECT NUMBER
27487.000

DATE
08/26/2026

ISSUE
DESIGN DEVELOPMENT

SHEET TITLE
TYPICAL FOOTING & FOUNDATION DETAILS

SHEET NO.
SB502

© HKS, INC.

TITLE BLOCK VERSION: 20210930
MODEL: Autodesk Docs://27487.000_IH - UV Sports Performance Center 2025/S_IH-UV_Sports-Performance-Center_2025.rvt
PRINT DATE: 8/26/2026 5:19:45 PM TEMPLATE VERSION:

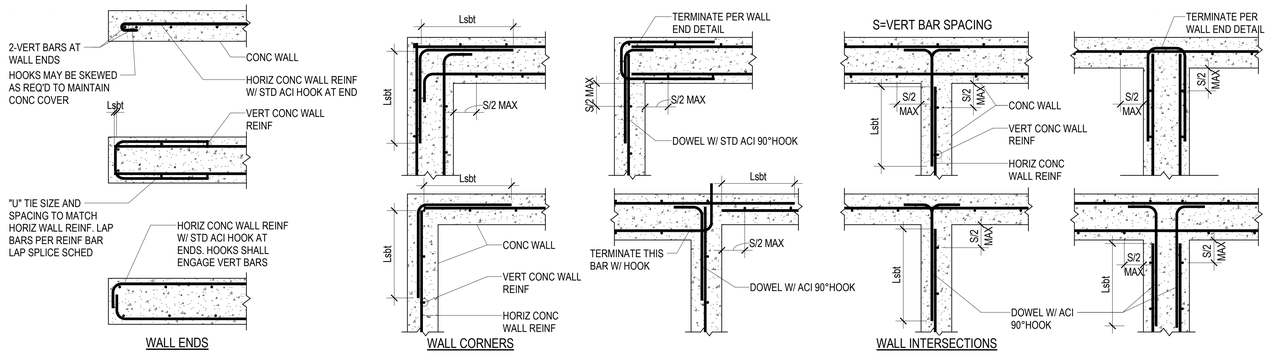

D2 / SB601 TYPICAL CONCRETE WALL REINFORCING AT ENDS, CORNERS AND INTERSECTIONS (PLAN VIEWS)

NO SCALE

CONCRETE FOUNDATION WALL SCHEDULE					
MARK	THICK	HORIZONTAL REINFORCING	VERTICAL REINFORCING	T & B HORIZ. BARS	PLACEMENT
CFW-1	8"				
CFW-2	1' - 2"				

NOTES:

1. HORIZONTAL WALL REINFORCING SHALL BE CONTINUOUS THRU CONSTRUCTION & CONTROL JOINTS.
2. SPLICES IN HORIZONTAL WALL REINFORCING SHALL BE TYPE Lsbt, STAGGERED SUCH THAT SPLICES DO NOT OVERLAP. SPLICES IN TWO CURTAINS SHALL NOT OCCUR IN THE SAME LOCATION.

PLACEMENT TYPE

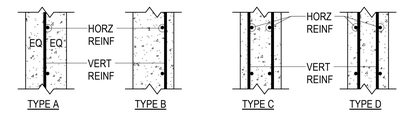

E.F. = EACH FACE
O.F. = OUTSIDE FACE (AGAINST SOIL)
I.F. = INSIDE FACE
3L = THREE LAYERS

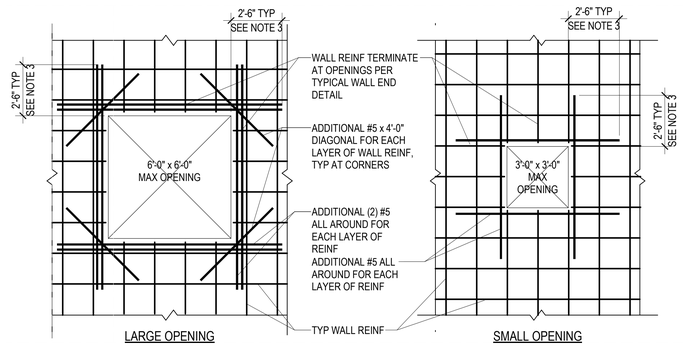

NOTES:

1. OMIT ADDED REINFORCEMENT SHOWN WHEN SPECIAL REINFORCEMENT INDICATED ON PLANS OR DETAILS, EXCEEDS THIS REINFORCEMENT.
2. CONTRACTOR SHALL VERIFY ALL OPENINGS NOT SHOWN ON THE STRUCTURAL DRAWINGS WITH THE STRUCTURAL ENGINEER BEFORE PLACEMENT.
3. WHEN EDGE OF CONCRETE CLOSE TO OPENING WILL NOT ALLOW THIS LENGTH TERMINATE AT EDGE WITH STANDARD HOOK.
4. WHERE MULTIPLE OPENINGS OCCUR WITHIN TWO TIMES THE OPENING DIMENSION, THE GROUP OF OPENINGS SHALL BE TREATED AS A SINGLE OPENING

C2 / SB601 TYPICAL OPENINGS THROUGH CONCRETE WALLS

NO SCALE

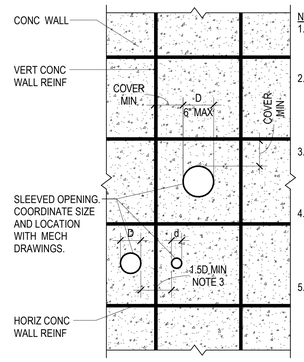

NOTES:

1. SLEEVED OPENINGS SHALL NOT OCCUR IN JAMB COLUMNS OR COUPLING BEAMS.
2. SLEEVED OPENINGS SHALL NOT CUT HORIZ OR VERT WALL REINF. SEE TYPICAL OPENING THROUGH CONCRETE WALL DETAIL WHERE THIS OCCURS.
3. MULTIPLE SLEEVED OPENINGS WITHIN 1.5D OF EACH OTHER SHALL BE TREATED AS ONE OPENING.
4. WHERE SLEEVE EXCEEDS DIMENSIONAL REQUIREMENTS OF THIS DETAIL, USE THE TYPICAL OPENING THROUGH CONCRETE WALL DETAIL.
5. CONTRACTOR SHALL COORDINATE WITH ARCH THAT SLEEVE MATERIAL IS CONSISTANT WITH FIRE RESISTANCE REQUIREMENTS

C4 / SB601 TYPICAL SLEEVED OPENING THROUGH CONCRETE WALL

NO SCALE

CONCRETE PIER SCHEDULE					
	DIMENSIONS		REINFORCING		
MARK	DEPTH	WIDTH	VERTICAL	TIES	REMARKS
CP-1	2' - 6"	2' - 0"	10#6	#3@8"	
CP-2	2' - 0"	2' - 0"	10#6	#3@8"	

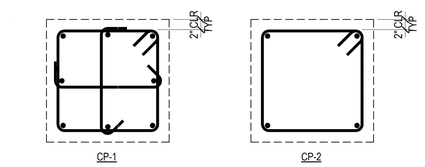

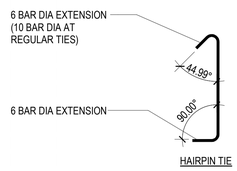

NOTES (HAIRPIN TIES):

1. CONSECUTIVE CROSS TIES SHALL HAVE THE DIRECTION OF THE HOOKS ATERNATED END FOR END ALONG THE VERTICAL JAMB COLUMN REINFORCING.
2. CROSS TIES SHALL BE THE SAME SPACING AS THE FULL TIES.

NOTES (ROUND COLUMN TIES):

1. ENDS OF CIRCULAR TIES SHALL OVERLAP BY AT LEAST 6 INCHES.
2. CIRCULAR TIE ENDS SHALL TERMINATE WITH STD 90° HOOKS THAT ENGAGE A VERTICAL BAR.
3. OVERLAPS AT ENDS OF ADJACENT CIRCULAR TIES SHALL BE STAGGERED AROUND THE PERIMETER ENCLOSING THE VERTICAL BARS.

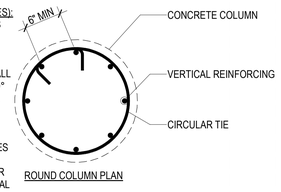

C5 / SB601 CONCRETE PIER REINFORCEMENT/TIE DIAGRAM - PLAN

NO SCALE

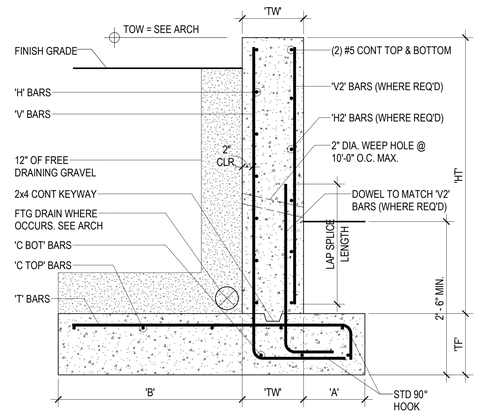

CONCRETE FOOTING SCHEDULE												
				CROSSWISE REINFORCING				LENGTHWISE REINFORCING				
MARK	WIDTH	LENGTH	THICK	NO.	SIZE	LENGTH	SPACE	NO.	SIZE	LENGTH	SPACE	REMARKS
FTS2.0	2' - 0"											
FC2.0	2' - 0"	CONT.	1' - 0"	--	NONE	REQ'D	--	3	#4	CONT.	9"	
FC3.0	3' - 0"	CONT.	1' - 0"	--	#5	2' - 6"	14"	3	#5	CONT.	15"	
FC3.5	3' - 6"	CONT.	1' - 0"	--	#5	3' - 0"	14"	3	#5	CONT.	18"	
FM-1	4' - 0"	30' 7"	2' - 0"	6	#8	3' - 6"	8.4"	6	#8	3' - 6"	8.4"	
FM-2	4' - 0"	31' 5 3/4"	2' - 0"	6	#8	3' - 6"	8.4"	6	#8	3' - 6"	8.4"	
FM-3	4' - 0"	33' 9 1/4"	2' - 0"	6	#8	3' - 6"	8.4"	6	#8	3' - 6"	8.4"	
FM-4	8' - 0"	59' - 0"	3' - 0"	12	#8	7' - 6"	8.2"	12	#8	7' - 6"	8.2"	
FM-5	10' - 0"	34' - 0"	4' - 0"	11	#8	9' - 6"	11.4"	11	#8	9' - 6"	11.4"	
FM-6	10' - 0"	57' - 0"	4' - 0"	11	#8	9' - 6"	11.4"	11	#8	9' - 6"	11.4"	
FM-7	10' - 0"	61' - 0"	4' - 0"	11	#8	9' - 6"	11.4"	11	#8	9' - 6"	11.4"	
FS4.0	4' - 0"	4' - 0"	1' - 2"	7	#4	3'-6"	7"	7	#4	3'-6"	7"	
FS5.0	5' - 0"	5' 0"	1' - 5"	6	#5	4'-6"	10.8"	6	#5	4'-6"	10.8"	
FS6.0	6' - 0"	6' - 0"	1' - 8"	9	#5	5'-6"	8.3"	9	#5	5'-6"	8.3"	
FS7.0	7' - 0"	7' - 0"	1' - 11"	8	#6	6'-6"	11.1"	8	#6	6'-6"	11.1"	
FS8.0	8' - 0"	8' - 0"	2' - 2"	11	#6	7'-6"	9"	11	#6	7'-6"	9"	

1. PLACE ALL FOOTING REINFORCING IN BOTTOM OF FOOTING WITH 3" CLEAR CONCRETE COVER UNLESS NOTED OTHERWISE.
2. TOP REINFORCING, WHERE SPECIFIED, SHALL BE PLACED IN THE TOP OF THE FOOTING WITH 2" CLEAR CONCRETE COVER.
3. SPOT FOOTINGS SHALL BE CENTERED UNDER COLUMNS AND CONTINUOUS FOOTINGS SHALL BE CENTERED UNDER WALLS, UNLESS NOTED OTHERWISE.
4. ALL FOOTINGS SHALL BE FORMED. FOOTINGS SHALL NOT BE EARTH FORMED OR OVERSIZED WITHOUT WRITTEN PERMISSION FROM THE STRUCTURAL ENGINEER.

CONCRETE RETAINING WALL SCHEDULE																			
						'V' BARS		'H' BARS		'V2' BARS		'H2' BARS		'T' BARS		'C TOP' BARS		'C BOT' BARS	
MARK	"HT"	'A'	'B'	'TW'	'TF'	SIZE	SPACE	SIZE	SPACE	SIZE	SPACE	SIZE	SPACE	SIZE	SPACE	SIZE	SPACE	SIZE	SPACE

1. 'V' BARS SHALL NOT BE SPLICED BELOW MID-HEIGHT OF WALL
2. FOR WALLSINDICATED BY (*), ONE HALF OF THE 'V' BARS CAN BE DISCONTINUED FROM MID-HEIGHT TO TOP OF WALL.

A1 / SB601 TYPICAL CONCRETE RETAINING WALL SCHEDULE AND DETAIL

NO SCALE

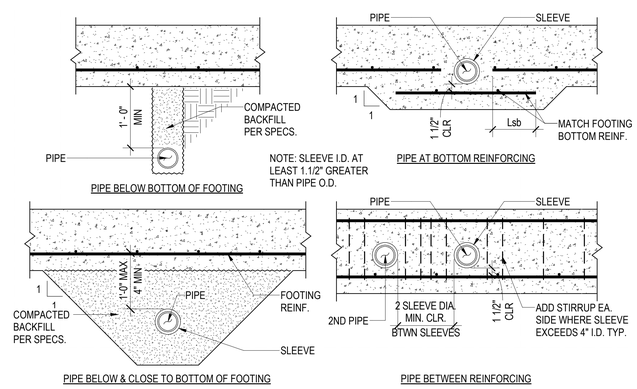

A3 / SB601 PIPES PENETRATING & ADJACENT TO FOOTINGS OR GRADE BEAMS

NO SCALE

HKS

ARCHITECT
HKS ARCHITECTS, INC.
90 SOUTH 400 WEST, #110
SALT LAKE CITY, UTAH 84101

CIVIL ENGINEER
GREAT BASIN ENGINEERING, INC
5746 SOUTH 1475 EAST
OGDEN, UTAH 84403

LANDSCAPE ARCHITECT
MGB+A STUDIO
145 WEST 200 SOUTH
SALT LAKE CITY, UTAH 84101

STRUCTURAL ENGINEER
REAVELEY ENGINEERS
250 EAST 200 SOUTH, SUITE 1000
SALT LAKE CITY, UTAH 84111

M/P/FP ENGINEER
RESOLUT GROUP
181 EAST 5600 SOUTH, SUITE 200
MURRAY, UTAH 84107

E/T ENGINEER
LYNK ENGINEERS
324 SOUTH STATE STREET, SUITE 400
SALT LAKE CITY, UTAH 84111

Intermountain Health

UTAH VALLEY SPORTS PERFORMANCE CENTER

PROJECT ADDRESS: WEST 880 NORTH 200 WEST PROVO, UTAH 84604

SEAL & SIGNATURE

KEY PLAN

REVISION

NO.	DESCRIPTION	DATE

HKS PROJECT NUMBER
27487.000

DATE
08/26/2026

ISSUE
DESIGN DEVELOPMENT

SHEET TITLE
CONCRETE SCHEDULES

SHEET NO.
SB601

© HKS, INC.

TITLE BLOCK VERSION: 20210930
MODEL: Autodesk Docs://27487.000_IH - UV Sports Performance Center_2025/S_IH-UV_Sports-Performance-Center_2025.rvt
PRINT DATE: 8/26/2026 5:19:46 PM TEMPLATE VERSION:

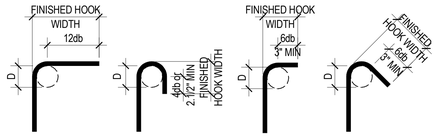

90° HOOK | 180° HOOK | 90° TIE HOOK | 135° TIE HOOK

END HOOK SCHEDULE						
BAR SIZE	STANDARD FINISHED HOOK WIDTH			SEISMIC FINISHED HOOK WIDTH		
	D	90° HOOK	180° HOOK	D	90° TIE HOOK	135° TIE HOOK
#3	2.1/4"	6"	3"	1.1/2"	4"	4.1/4"
#4	3"	8"	4"	2"	4.1/2"	4.1/2"
#5	3.3/4"	10"	5"	2.1/2"	6"	5.1/2"
#6	4.1/2"	12"	6"	4.1/2"	--	8"
#7	5.1/4"	14"	7"	5.1/4"	--	9"
#8	6"	16"	8"	6"	--	10.1/2"
#9	9.1/2"	19"	11.3/4"	--	--	--
#10	10.3/4"	22"	13.1/4"	--	--	--
#11	12"	24"	14.3/4"	--	--	--
#14	18.1/4"	31"	21.3/4"	--	--	--
#18	24"	41"	28.1/2"	--	--	--

D1 / SB602 REINFORCEMENT END HOOK SCHEDULE

NO SCALE

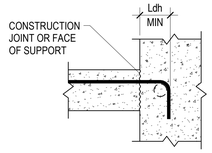

TENSION HOOK DEVELOPMENT LENGTH (Ldh)					
BAR SIZE	NORMAL WEIGHT CONCRETE, f'c = PSI				
	3,000	4,000	4,500	5,000	6,000
#3	6"	6"	6"	6"	6"
#4	6"	6"	6"	6"	6"
#5	8"	8"	8"	8"	7"
#6	11"	10"	10"	10"	10"
#7	14"	13"	12"	12"	12"
#8	16"	15"	15"	15"	15"
#9	20"	18"	18"	18"	17"
#10	23"	22"	21"	21"	21"
#11	27"	26"	25"	25"	24"
#14	71"	66"	65"	64"	63"
#18	109"	102"	100"	98"	96"

NOTES:
1. SCHEDULE DOES NOT APPLY FOR THE FOLLOWING HOOKED BAR CASES:
   a. BAR SPACING(s) LESS THAN 6db.
   b. BARS TERMINATING IN A COLUMN CORE WITH SIDE COVER PERPENDICULAR TO PLANE OF HOOK LESS THAN 2.5 IN.
   c. BARS WITH SIDE COVER PERPENDICULAR TO PLANE OF HOOK LESS THAN 6db.
   d. BARS AT DISCONTINUOUS ENDS OF MEMBERS WITH SIDE, TOP, AND BOTTOM COVER TO HOOK LESS THAN 2.5 IN.
2. VALUES IN SCHEDULE ARE APPLICABLE TO GRADE 60 REINFORCING BARS
   a. FOR GRADE 80 BARS, MULTIPLY VALUES BY 1.33.
   b. FOR GRADE 100 BARS, MULTIPLY VALUES BY 1.67.
3. ADJUST VALUES AS NOTED FOR THE FOLLOWING CASES
   a. FOR BARS COATED IN EPOXY AND/OR ZINC MULTIPLY VALUES BY 1.2.
   b. FOR LIGHTWEIGHT CONCRETE MULTIPLY VALUES BY 1.33.
4. CASES NOT APPLICABLE TO THIS SCHEDULE SHALL BE IN ACCORDANCE WITH SECTION 25.4.3 OF ACI 318-19

C2 / SB602 TENSION HOOK DEVELOPMENT SCHEDULE

NO SCALE

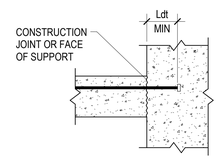

TENSION HEADED BAR DEVELOPMENT LENGTH (Ldt)					
BAR SIZE	NORMAL WEIGHT CONCRETE, f'c = PSI				
	3,000	4,000	4,500	5,000	6,000
#3	6"	6"	6"	6"	6"
#4	6"	6"	6"	6"	6"
#5	6"	6"	6"	6"	6"
#6	8"	8"	7"	7"	7"
#7	10"	9"	9"	9"	9"
#8	12"	11"	11"	11"	11"
#9	14"	14"	13"	13"	13"
#10	17"	16"	16"	16"	15"
#11	20"	19"	18"	18"	18"

NOTES:
1. SCHEDULE DOES NOT APPLY FOR THE FOLLOWING HEADED BAR CASES:
   a. BAR SPACING(s) LESS THAN 6db.
   b. BARS TERMINATING IN A COLUMN CORE WITH SIDE COVER PERPENDICULAR TO PLANE OF HEADED BAR LESS THAN 2.5 IN.
   c. BARS WITH SIDE COVER PERPENDICULAR TO PLANE OF HEADED BAR LESS THAN 6db.
2. VALUES IN SCHEDULE ARE APPLICABLE TO GRADE 60 REINFORCING BARS.
   a. FOR GRADE 80 BARS, MULTIPLY VALUES BY 1.33.
   b. FOR GRADE 100 BARS, MULTIPLY BY VALUES 1.67
3. FOR EPOXY AND/OR ZINC COATED BARS MULTIPLY VALUES BY 1.2
4. CASES NOT APPLICABLE TO THIS SCHEDULE SHALL BE IN ACCORDANCE WITH SECTION 25.4.4. OF ACI 318-19
5. TENSION HEADED REINFORCING BARS SHALL CONFORM TO SECTION 25.4.4.1 OF ACI 318-19.

C3 / SB602 TENSION HEADED BAR DEVELOPMENT SCHEDULE

NO SCALE

CONCRETE REINFORCING BAR DEVELOPMENT AND LAP SPLICE LENGTH SCHEDULE																										
BAR SIZE	f'c = 3000 PSI				f'c = 4000 PSI				f'c = 4500 PSI				f'c = 5000 PSI				f'c = 6000 PSI				f'c = ALL	
	Ld	Lt	Lsb	Lsbt	Ld	Lt	Lsb	Lsbt	Ld	Lt	Lsb	Lsbt	Ld	Lt	Lsb	Lsbt	Ld	Lt	Lsb	Lsbt	Ldc	Lsc
#3	17"	22"	22"	28"	15"	19"	19"	25"	14"	18"	18"	23"	13"	17"	17"	22"	12"	16"	16"	20"	8"	12"
#4	22"	29"	29"	38"	19"	25"	25"	33"	18"	24"	24"	31"	17"	23"	23"	29"	16"	21"	21"	27"	10"	15"
#5	28"	36"	36"	47"	24"	31"	31"	41"	23"	30"	30"	38"	22"	28"	28"	36"	20"	26"	26"	33"	12"	19"
#6	33"	43"	43"	56"	29"	37"	37"	49"	27"	35"	35"	46"	26"	34"	34"	44"	24"	31"	31"	40"	15"	23"
#7	48"	63"	63"	81"	42"	54"	54"	71"	40"	51"	51"	67"	38"	49"	49"	63"	34"	45"	45"	58"	17"	27"
#8	55"	72"	72"	93"	48"	62"	62"	81"	45"	59"	59"	76"	43"	56"	56"	72"	39"	51"	51"	66"	19"	30"
#9	62"	81"	81"	105"	54"	70"	70"	91"	51"	66"	66"	86"	48"	63"	63"	81"	44"	57"	57"	74"	22"	34"
#10	70"	91"	91"	118"	61"	79"	79"	102"	57"	74"	74"	96"	54"	71"	71"	92"	50"	64"	64"	84"	24"	39"
#11	78"	101"	101"	131"	67"	87"	87"	114"	64"	82"	82"	107"	60"	78"	78"	102"	55"	71"	71"	93"	27"	43"
#14	93"	121"	NA	NA	81"	105"	NA	NA	76"	99"	NA	NA	72"	94"	NA	NA	66"	86"	NA	NA	33"	NA
#18	124"	161"	NA	NA	108"	140"	NA	NA	101"	132"	NA	NA	96"	125"	NA	NA	88"	114"	NA	NA	43"	NA

NOTES:
1. DEFINITIONS:
   Ld: TENSION DEVELOPMENT LENGTH FOR REINFORCEMENT SATISFYING THE FOLLOWING CONDITIONS:
   SLABS AND WALLS: CLEAR SPACING > 2db AND CONCRETE CLEAR COVER > db
   BEAMS AND COLUMNS: CLEAR COVER SPACING > db AND CONCRETE CLEAR COVER > db
   Lt: DEVELOPMENT LENGTH FOR TOP BARS IN TENSION
   Lsb: TENSION LAP SPLICE LENGTH FOR OTHER THAN TOP BARS (CLASS B)
   Lsbt: TENSION LAP SPLICE LENGTH OF TOP BARS.
   Ldc: DEVELOPMENT LENGTH FOR BARS IN COMPRESSION
   Lsc: TIED COLUMN LAP SPLICE IN COMPRESSION
   db: NOMINAL BAR DIAMETER (INCHES)
   TOP BARS: HORIZONTAL BEAM REINFORCEMENT WITH MORE THAN 12 INCHES OF CONCRETE CAST BELOW
2. MULTIPLY VALUES IN SCHEDULE BY 1.5 IF CLEAR SPACING OR CONCRETE COVER DO NOT MEET REQUIREMENTS FOR Ld IN NOTE 1.
3. MULTIPLY VALUES IN SCHEDULE BY 1.3 FOR USE IN LIGHTWEIGHT AGGREGATE CONCRETE.
4. FOR EPOXY COATED BAR: MULTIPLY VALUES IN SCHEDULE BY 1.5 FOR BARS WITH CLEAR COVER < 3db OR CLEAR SPACING < 6db. OTHERWISE MULTIPLY VALUES BY 1.2.
5. a. FOR BUNDLED BARS OF THREE OR LESS MULTIPLY LENGTHS BY 1.2.
   b. FOR BUNDLED BARS OF FOUR OR MORE MULTIPLY LENGTHS BY 1.33.
   c. INDIVIDUAL BAR SPLICES WITHIN A BUNDLE SHALL NOT OVERLAP. ENTIRE BUNDLES SHALL NOT BE LAP SPLICED.
6. SCHEDULE LENGTHS ARE FOR fy=60ksi REINFORCING, MULTIPLY LENGTHS BY 1.53 FOR fy=80ksi, 2.17 FOR fy=100ksi REINFORCING.
7. LAP SPLICES ARE NOT PERMITTED FOR #14 & #18 BARS. USE BAR COUPLERS PER G.S.N.
8. MINIMUM CLEAR SPACING BETWEEN THE CONTACT LAP SPLICES SHOWN IN THIS SCHEDULE AND ADJACENT SPLICES OR BARS SHALL BE IN ACCORDANCE WITH THE DETAILING PROVISIONS OF GENERAL STRUCTURAL NOTES.

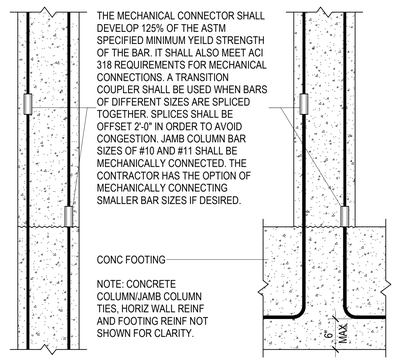

B3 / SB602 TYP MECHANICALLY SPLICED CONC COLUMN/JAMB COLUMN REINF

NO SCALE

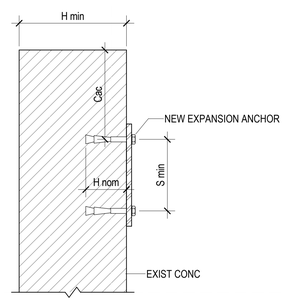

B4 / SB602 EXPANSION ANCHORS IN CONCRETE SCHEDULE

NO SCALE

EXPANSION ANCHORS IN CONCRETE SCHEDULE				
ANCHOR SIZE	MINIMUM EDGE DISTANCE (Cac)	EMBEDMENT LENGTH (H nom)	MINIMUM CONCRETE THICKNESS (H min)	MINIMUM ANCHOR SPACING (S min)
3/8"Ø	6.1/2"	2.7/8"	4.1/2"	3.3/4"
1/2"Ø	10"	3.7/8"	6"	5"
5/8"Ø	10"	5.1/8"	8"	6"
3/4"Ø	16"	5.3/4"	10"	7"

NOTES:
1. THIS SCHEDULE SHALL BE USED ONLY WHERE SPECIFICALLY REFERENCED ON THE DRAWINGS. ANCHORS AT OTHER LOCATIONS MUST BE APPROVED BY THE ENGINEER PRIOR TO INSTALLATION.
2. EDGE DISTANCE, Cac, AND EMBEDMENT LENGTHS, H nom, AND ANCHOR SPACING SPECIFIED ON PLANS OR DETAILS TAKE PRECEDENCE OVER VALUES IN THIS SCHEDULE.
3. ANCHORS LOCATED WHERE THE THICKNESS OF THE EXISTING CONCRETE MEMBER DOES NOT MEET THE REQUIRED MINIMUM CONCRETE THICKNESS MUST BE APPROVED BY THE STRUCTURAL ENGINEER PRIOR TO INSTALLATION.
4. SEE GENERAL STRUCTURAL NOTES FOR LIST OF APPROVED ANCHORS AND OTHER REQUIREMENTS FOR USING EXPANSION ANCHORS.

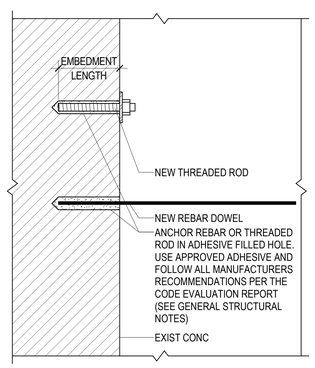

A2 / SB602 ADHESIVE ANCHORS IN CONCRETE SCHEDULE

NO SCALE

ADHESIVE ANCHORS IN CONCRETE SCHEDULE			
REINFORCING BAR		THREADED ROD	
DOWEL SIZE	EMBEDMENT LENGTH (SEE NOTE #2)	SIZE	EMBEDMENT LENGTH (SEE NOTE #2)
#3	4"	3/8"Ø	4.1/2"
#4	6"	1/2"Ø	6"
#5	9"	5/8"Ø	7.1/2"
#6	10"	3/4"Ø	9"
#7	12.1/2"	7/8"Ø	10.1/2"
#8	13"	1"Ø	12"
#9	14"	1.1/4"Ø	15"
#10	18"		
#11	19"		

NOTES:
1. THIS SCHEDULE SHALL BE USED ONLY WHERE SPECIFICALLY REFERENCED ON THE DRAWINGS AND AT OTHER LOCATIONS WITH APPROVAL OF THE STRUCTURAL ENGINEER.
2. EMBEDMENT LENGTHS SPECIFIED ON PLANS OR DETAILS TAKE PRECEDENCE OVER EMBEDMENT LENGTHS IN THIS SCHEDULE.
3. WHERE THE THICKNESS OF THE EXISTING CONCRETE MEMBER IS NOT SUFFICIENT TO ACHIEVE SCHEDULED EMBEDMENT AND SPECIFIED CLEAR COVER FOR THE ANCHOR, CONTACT THE STRUCTURAL ENGINEER.
4. SEE GENERAL STRUCTURAL NOTES FOR LIST OF APPROVED ADHESIVES AND OTHER REQUIREMENTS FOR ADHESIVE ANCHORING.

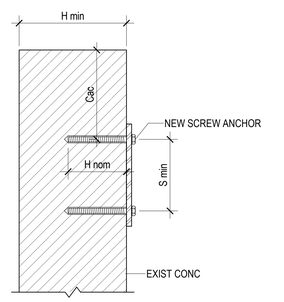

A4 / SB602 SCREW ANCHORS IN CONCRETE SCHEDULE

NO SCALE

SCREW ANCHORS IN CONCRETE SCHEDULE				
ANCHOR SIZE	MINIMUM EDGE DISTANCE (Cac)	EMBEDMENT LENGTH (H nom)	MINIMUM CONCRETE THICKNESS (H min)	MINIMUM ANCHOR SPACING (S min)
3/8"Ø	3.3/4"	3.1/4"	5"	3"
1/2"Ø	4.1/2"	4"	6.1/4"	3.1/2"
5/8"Ø	6.3/8"	5.1/2"	8.1/2"	3.3/4"
3/4"Ø	7.5/16"	6.1/4"	10"	4.1/2"

NOTES:
1. THIS SCHEDULE SHALL BE USED ONLY WHERE SPECIFICALLY REFERENCED ON THE DRAWINGS AND AT OTHER LOCATIONS WITH APPROVAL OF THE STRUCTURAL ENGINEER.
2. EDGE DISTANCE, Cac, AND EMBEDMENT LENGTHS, H nom, AND ANCHOR SPACING SPECIFIED ON PLANS OR DETAILS TAKE PRECEDENCE OVER VALUES IN THIS SCHEDULE.
3. ANCHORS LOCATED WHERE THE THICKNESS OF THE EXISTING CONCRETE MEMBER DOES NOT MEET THE REQUIRED MINIMUM CONCRETE THICKNESS MUST BE APPROVED BY THE STRUCTURAL ENGINEER PRIOR TO INSTALLATION..
4. SPECIAL INSPECTION IS REQUIRED DURING INSTALLATION OF ALL SCREW ANCHORS PER THE CODE EVALUATION REPORT FOR THE ANCHOR AND THE QUALITY ASSURANCE SECTION OF THE GENERAL STRUCTURAL NOTES.
5. SEE GENERAL STRUCTURAL NOTES FOR LIST OF APPROVED ANCHORS AND OTHER REQUIREMENTS FOR USING SCREW ANCHORS.
6. SCREW ANCHORS SHALL ONLY BE USED IN INTERIOR DRY LOCATIONS

HKS

ARCHITECT
HKS ARCHITECTS, INC.
90 SOUTH 400 WEST, #110
SALT LAKE CITY, UTAH 84101

CIVIL ENGINEER
GREAT BASIN ENGINEERING, INC
5746 SOUTH 1475 EAST
OGDEN, UTAH 84403

LANDSCAPE ARCHITECT
MGB+A STUDIO
145 WEST 200 SOUTH
SALT LAKE CITY, UTAH 84101

STRUCTURAL ENGINEER
REAVELEY ENGINEERS
250 EAST 200 SOUTH, SUITE 1000
SALT LAKE CITY, UTAH 84111

M/P/FP ENGINEER
RESOLUT GROUP
181 EAST 5600 SOUTH, SUITE 200
MURRAY, UTAH 84107

E/T ENGINEER
LYNK ENGINEERS
324 SOUTH STATE STREET, SUITE 400
SALT LAKE CITY, UTAH 84111

Intermountain Health

UTAH VALLEY SPORTS PERFORMANCE CENTER

PROJECT ADDRESS: WEST 880 NORTH 200 WEST PROVO, UTAH 84604

SEAL & SIGNATURE

KEY PLAN

REVISION

NO.	DESCRIPTION	DATE

HKS PROJECT NUMBER
27487.000

DATE
08/26/2026

ISSUE
DESIGN DEVELOPMENT

SHEET TITLE
REINFORCING SCHEDULES

SHEET NO.
SB602

© HKS, INC.

TITLE BLOCK VERSION: 20210930
PRINT DATE: 8/26/2026 5:19:47 PM TEMPLATE VERSION:
MODEL: Autodesk Docs://27487.000_H_UV Sports Performance Center_2025/S_PH-UV_Sports Performance Center_2025.rvt

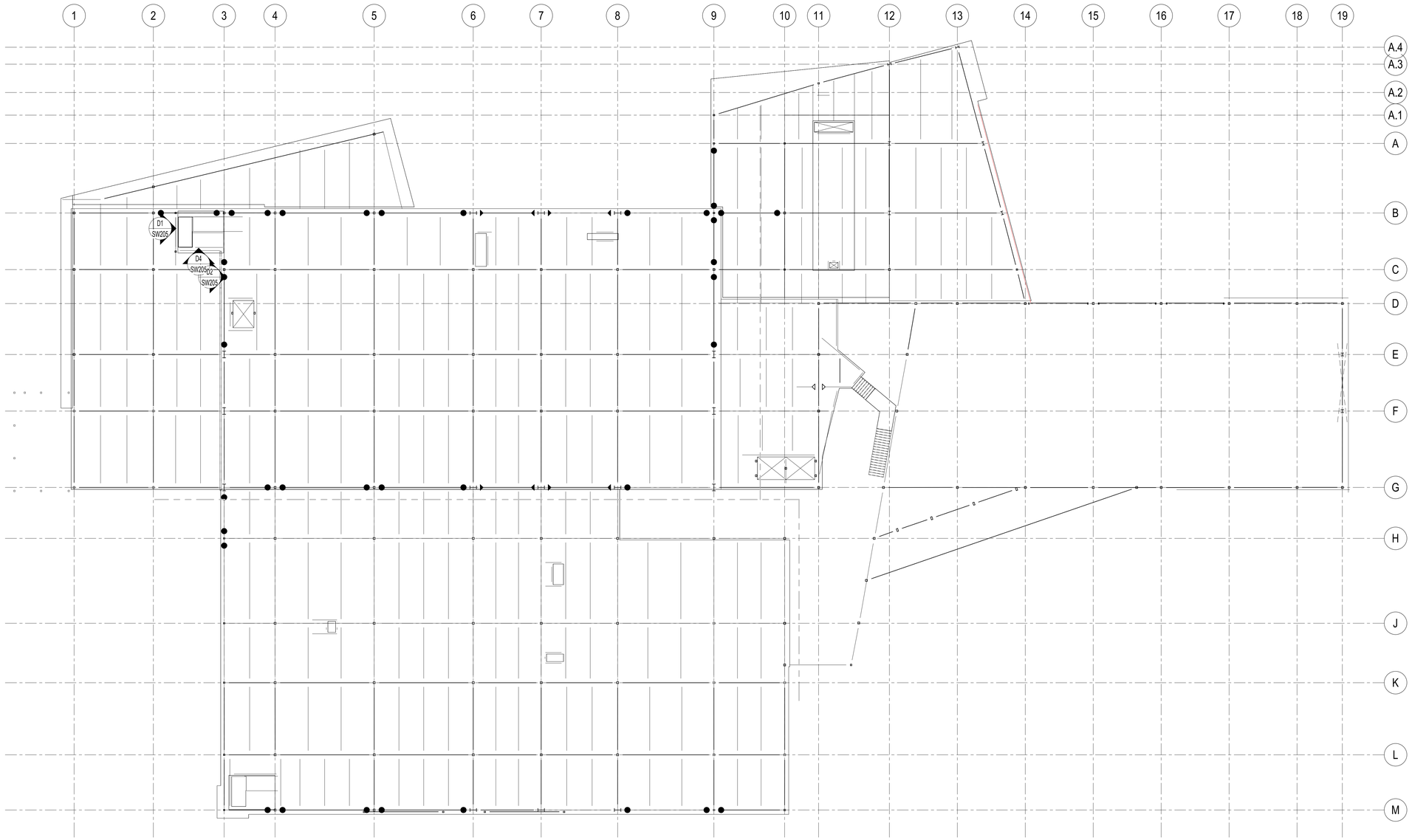

A1 / SF102 LEVEL 02 - OVERALL FLOOR FRAMING PLAN

SCALE: 1/16" = 1'-0"

HKS

ARCHITECT
HKS ARCHITECTS, INC.
90 SOUTH 400 WEST, #110
SALT LAKE CITY, UTAH 84101

CIVIL ENGINEER
GREAT BASIN ENGINEERING, INC
5746 SOUTH 1475 EAST
OGDEN, UTAH 84403

LANDSCAPE ARCHITECT
MGB+A STUDIO
145 WEST 200 SOUTH
SALT LAKE CITY, UTAH 84101

STRUCTURAL ENGINEER
REAVELEY ENGINEERS
250 EAST 200 SOUTH, SUITE 1000
SALT LAKE CITY, UTAH 84111

M/P/FP ENGINEER
RESOLUT GROUP
181 EAST 5600 SOUTH, SUITE 200
MURRAY, UTAH 84107

E/T ENGINEER
LYNK ENGINEERS
324 SOUTH STATE STREET, SUITE 400
SALT LAKE CITY, UTAH 84111

Intermountain Health

UTAH VALLEY SPORTS PERFORMANCE CENTER

PROJECT ADDRESS: WEST 880 NORTH 200 WEST PROVO, UTAH 84604

SEAL & SIGNATURE

KEY PLAN

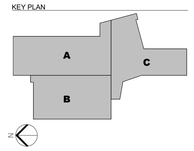

REVISION

NO.	DESCRIPTION	DATE

HKS PROJECT NUMBER
27487.000

DATE
08/26/2026

ISSUE
DESIGN DEVELOPMENT

SHEET TITLE
LEVEL 02 - OVERALL FLOOR FRAMING PLAN

SHEET NO.
SF102

© HKS, INC.

TITLE BLOCK VERSION: 20210930
MODEL: Autodesk Docs://27487.000_H - UV Sports Performance Center_2025/S_H-UV_Sports-Performance-Center_2025.rvt
PRINT DATE: 8/26/2026 5:19:47 PM TEMPLATE VERSION:

FLOOR FRAMING PLAN NOTES

1. SEE ARCHITECTURAL DRAWINGS AND FINISH SCHEDULE FOR SLAB AREAS TO RECEIVE FLOOR TILE.

ELEVATOR NOTES

1. CONTRACTOR TO COORDINATE LOCATION OF GUIDERAIL SUPPORT COLUMNS, SEPARATOR BEAMS, MACHINE BEAMS AND HOIST BEAMS. MEMBERS SHOWN ARE SCHEMATIC AND MAY CHANGE BASED ON ELEVATOR MANUFACTURER REQUIREMENTS.
2. CONTRACTOR SHALL VERIFY ELEVATOR PIT DEPTH AND SUMP REQUIREMENTS PRIOR TO PLACING CONCRETE AT PIT.

COMPOSITE STEEL FRAMING PLAN NOTES

1. SEE STEEL DECK SCHEDULE ON SHEET SF604 FOR DECK PROFILE, DECK ATTACHMENT, CONCRETE FILL AND SLAB REINFORCEMENT REQUIREMENTS.
2. PROVIDE CONTROL JOINTS IN CONCRETE SLABS OVER STEEL DECK PER DETAIL D4/SF501 AND GSN SECTION 3.4.H. SUBMIT CONTROL JOINT AND SLAB REINFORCEMENT PLANS FOR REVIEW.
3. PROVIDE REINFORCEMENT/FRAMING AT OPENINGS THROUGH STEEL DECK PER TYPICAL OPENING REINFORCING DETAIL D1/SF501.
4. SEE C1/SF501 FOR TYPICAL STUD PLACEMENT DIAGRAMS FOR HEADED STUD ANCHORS ON COMPOSITE BEAMS. ADJUST STUD HEIGHT AT SLAB RECESSES PER DETAIL B5/SF501.
5. PROVIDE STEEL DECK FILLER PER DETAIL C2/SF501 WHERE REQUIRED FOR HEADED STUD PLACEMENT.
6. DO NOT PLACE CONDUIT IN CONCRETE OVER STEEL DECK.
7. PROVIDE HOUSEKEEPING PADS AND CURBS PER DETAIL C4/SF501. VERIFY DIMENSIONS AND LOCATIONS OF CURBS AND PADS WITH MECHANICAL AND EQUIPMENT SUPPLIER.
8. STRUCTURE OVER MECHANICAL ROOMS HAS BEEN DESIGNED FOR UP TO __ PSF FOR PIPES AND OTHER HANGING LOADS. IF THIS ALLOWANCE IS EXCEEDED, CONTACT ENGINEER PRIOR TO INSTALLATION.

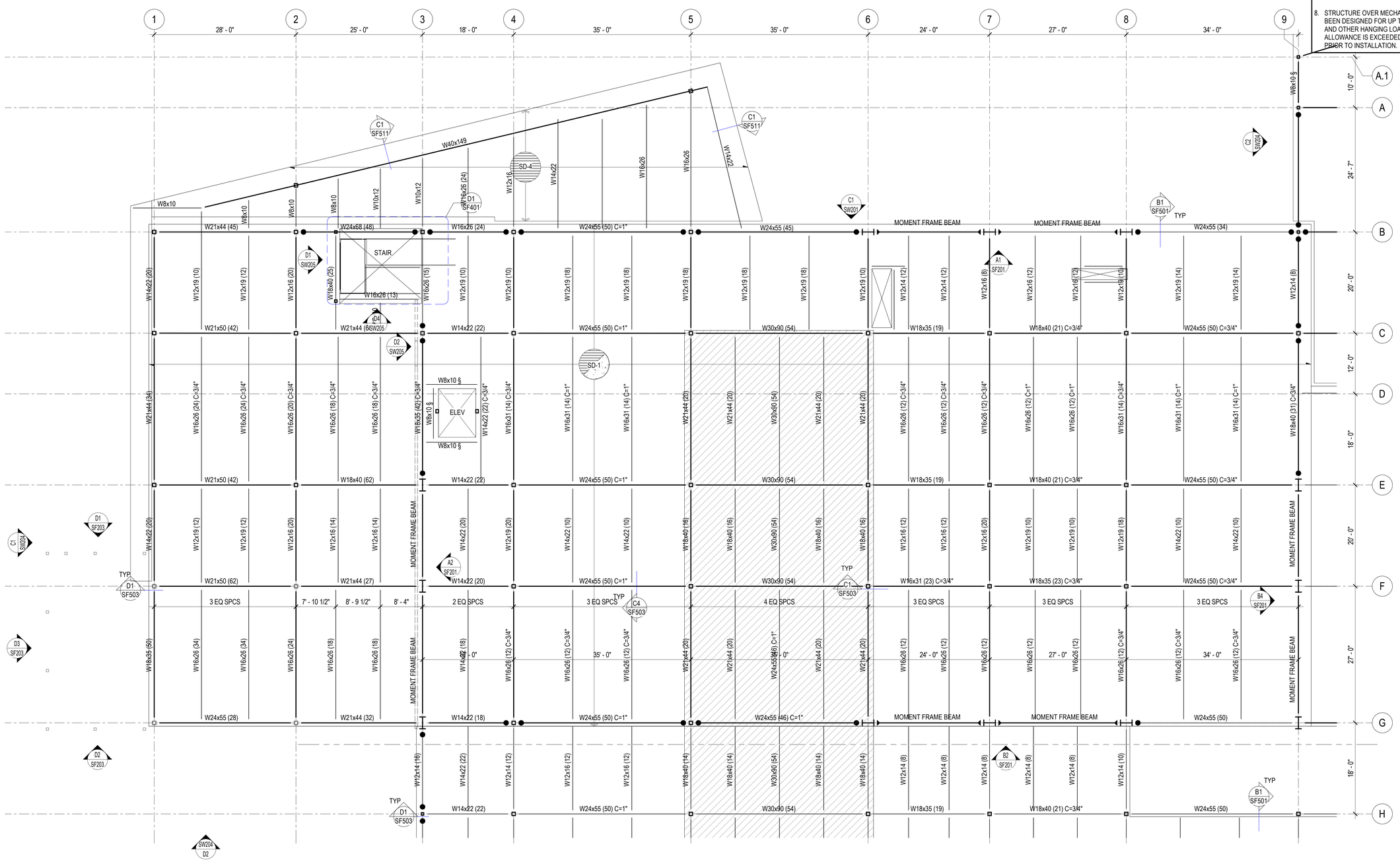

A1 SF102A LEVEL 02 - FLOOR FRAMING PLAN- SECTOR A

SCALE: 1/8" = 1'-0"

HKS

ARCHITECT
HKS ARCHITECTS, INC.
90 SOUTH 400 WEST, #110
SALT LAKE CITY, UTAH 84101

CIVIL ENGINEER
GREAT BASIN ENGINEERING, INC
5746 SOUTH 1475 EAST
OGDEN, UTAH 84403

LANDSCAPE ARCHITECT
MGB+A STUDIO
145 WEST 200 SOUTH
SALT LAKE CITY, UTAH 84101

STRUCTURAL ENGINEER
REAVELEY ENGINEERS
250 EAST 200 SOUTH, SUITE 1000
SALT LAKE CITY, UTAH 84111

M/P/FP ENGINEER
RESOLUT GROUP
181 EAST 5600 SOUTH, SUITE 200
MURRAY, UTAH 84107

E/T ENGINEER
LYNK ENGINEERS
324 SOUTH STATE STREET, SUITE 400
SALT LAKE CITY, UTAH 84111

Intermountain Health

UTAH VALLEY SPORTS PERFORMANCE CENTER

PROJECT ADDRESS: WEST 880 NORTH 200 WEST PROVO, UTAH 84604

SEAL & SIGNATURE

KEY PLAN

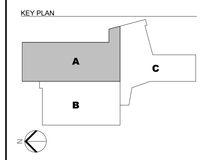

REVISION

NO.	DESCRIPTION	DATE

HKS PROJECT NUMBER
27487.000

DATE
08/26/2026

ISSUE
DESIGN DEVELOPMENT

SHEET TITLE
LEVEL 02 - FLOOR FRAMING PLAN- SECTOR A

SHEET NO.
SF102A

© HKS, INC.

TITLE BLOCK VERSION: 20210930
MODEL: Autodesk Docs://27487.000_IH_UV Sports Performance Center_2025/S_IH-UV Sports Performance Center_2025.rvt
PRINT DATE: 8/26/2026 5:19:48 PM TEMPLATE VERSION:

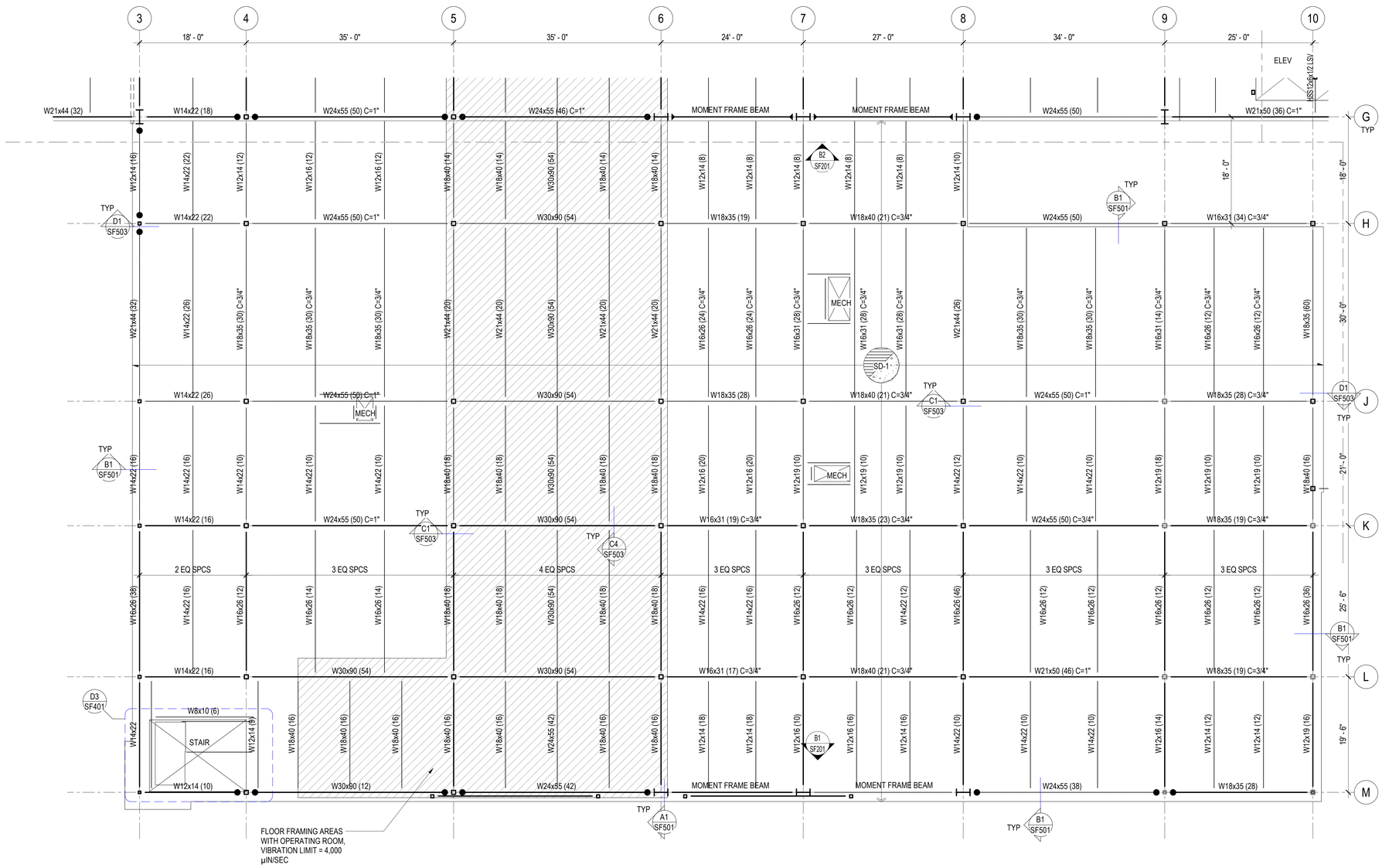

A1 SF102B LEVEL 02 - FLOOR FRAMING PLAN- SECTOR B

SCALE: 1/8" = 1'-0"

FLOOR FRAMING PLAN NOTES

1. SEE ARCHITECTURAL DRAWINGS AND FINISH SCHEDULE FOR SLAB AREAS TO RECEIVE FLOOR TILE.

COMPOSITE STEEL FRAMING PLAN NOTES

1. SEE STEEL DECK SCHEDULE ON SHEET SF604 FOR DECK PROFILE, DECK ATTACHMENT, CONCRETE FILL AND SLAB REINFORCEMENT REQUIREMENTS.
2. PROVIDE CONTROL JOINTS IN CONCRETE SLABS OVER STEEL DECK PER DETAIL D4/SF501 AND GSN SECTION 3.4.H. SUBMIT CONTROL JOINT AND SLAB REINFORCEMENT PLANS FOR REVIEW.
3. PROVIDE REINFORCEMENT/FRAMING AT OPENINGS THROUGH STEEL DECK PER TYPICAL OPENING REINFORCING DETAIL D1/SF501.
4. SEE C1/SF501 FOR TYPICAL STUD PLACEMENT DIAGRAMS FOR HEADED STUD ANCHORS ON COMPOSITE BEAMS. ADJUST STUD HEIGHT AT SLAB RECESSES PER DETAIL B5/SF501.
5. PROVIDE STEEL DECK FILLER PER DETAIL C2/SF501 WHERE REQUIRED FOR HEADED STUD PLACEMENT.
6. DO NOT PLACE CONDUIT IN CONCRETE OVER STEEL DECK.
7. PROVIDE HOUSEKEEPING PADS AND CURBS PER DETAIL C4/SF501. VERIFY DIMENSIONS AND LOCATIONS OF CURBS AND PADS WITH MECHANICAL AND EQUIPMENT SUPPLIER.
8. STRUCTURE OVER MECHANICAL ROOMS HAS BEEN DESIGNED FOR UP TO __ PSF FOR PIPES AND OTHER HANGING LOADS. IF THIS ALLOWANCE IS EXCEEDED, CONTACT ENGINEER PRIOR TO INSTALLATION.

ELEVATOR NOTES

1. CONTRACTOR TO COORDINATE LOCATION OF GUIDERAIL SUPPORT COLUMNS, SEPARATOR BEAMS, MACHINE BEAMS AND HOIST BEAMS. MEMBERS SHOWN ARE SCHEMATIC AND MAY CHANGE BASED ON ELEVATOR MANUFACTURER REQUIREMENTS.
2. CONTRACTOR SHALL VERIFY ELEVATOR PIT DEPTH AND SUMP REQUIREMENTS PRIOR TO PLACING CONCRETE AT PIT.

HKS

ARCHITECT
HKS ARCHITECTS, INC.
90 SOUTH 400 WEST, #110
SALT LAKE CITY, UTAH 84101

CIVIL ENGINEER
GREAT BASIN ENGINEERING, INC
5746 SOUTH 1475 EAST
OGDEN, UTAH 84403

LANDSCAPE ARCHITECT
MGB+A STUDIO
145 WEST 200 SOUTH
SALT LAKE CITY, UTAH 84101

STRUCTURAL ENGINEER
REAVELEY ENGINEERS
250 EAST 200 SOUTH, SUITE 1000
SALT LAKE CITY, UTAH 84111

M/P/FP ENGINEER
RESOLUT GROUP
181 EAST 5600 SOUTH, SUITE 200
MURRAY, UTAH 84107

E/T ENGINEER
LYNK ENGINEERS
324 SOUTH STATE STREET, SUITE 400
SALT LAKE CITY, UTAH 84111

Intermountain Health

UTAH VALLEY SPORTS PERFORMANCE CENTER

PROJECT ADDRESS: WEST 880 NORTH 200 WEST PROVO, UTAH 84604

SEAL & SIGNATURE

KEY PLAN

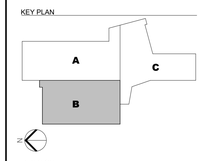

REVISION

NO.	DESCRIPTION	DATE

HKS PROJECT NUMBER
27487.000

DATE
08/26/2026

ISSUE
DESIGN DEVELOPMENT

SHEET TITLE
LEVEL 02 - FLOOR FRAMING PLAN- SECTOR B

SHEET NO.
SF102B

© HKS, INC.

TITLE BLOCK VERSION: 20210930
MODEL: Autodesk Docs://27487.000_IH - UV Sports Performance Center_2025/S_IH-UV_Sports-Performance-Center_2025.rvt
PRINT DATE: 8/26/2025 5:19:49 PM TEMPLATE VERSION:

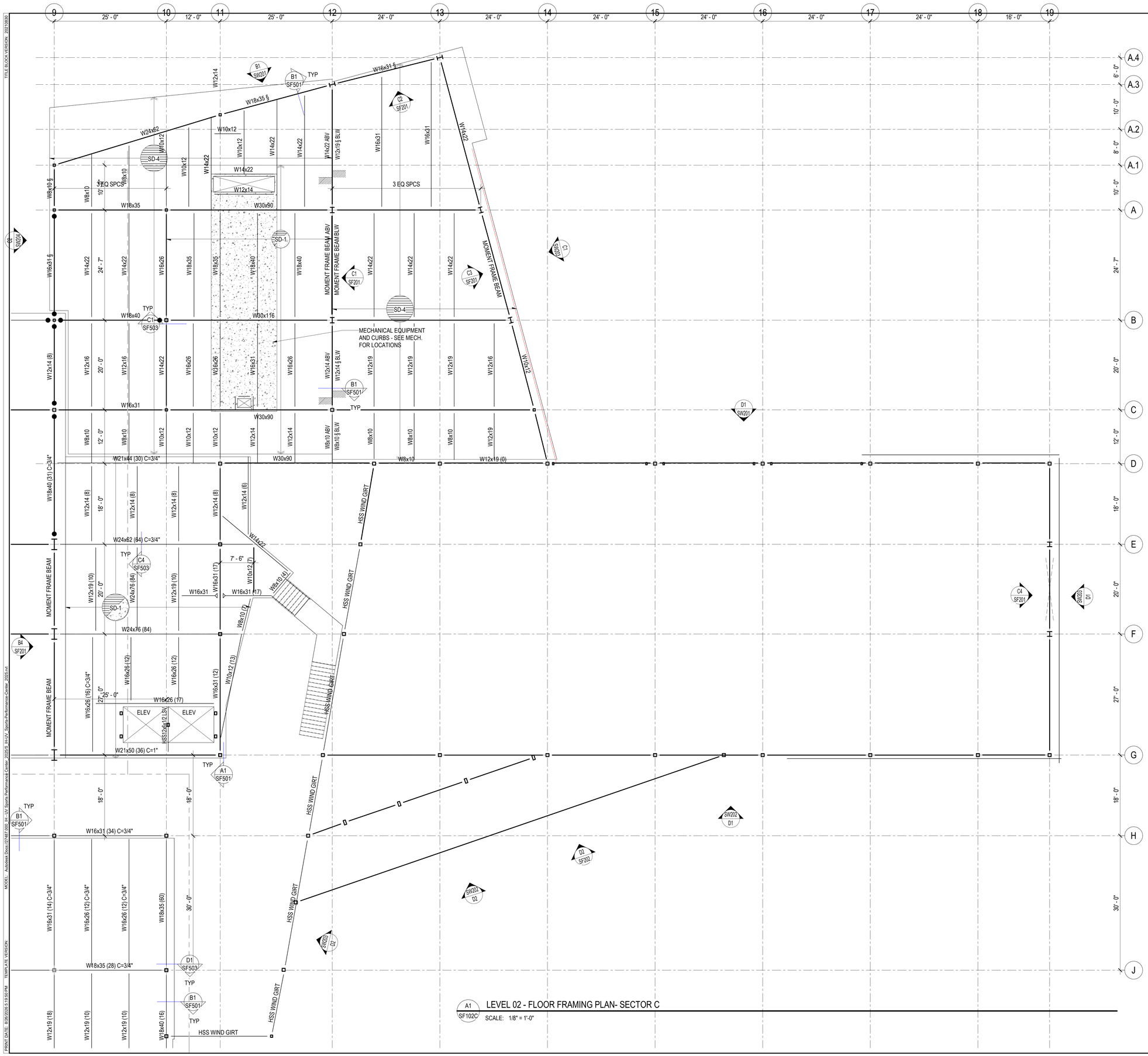

A1 SF102C LEVEL 02 - FLOOR FRAMING PLAN- SECTOR C

SCALE: 1/8" = 1'-0"

FLOOR FRAMING PLAN NOTES

1. SEE ARCHITECTURAL DRAWINGS AND FINISH SCHEDULE FOR SLAB AREAS TO RECEIVE FLOOR TILE.

COMPOSITE STEEL FRAMING PLAN NOTES

1. SEE STEEL DECK SCHEDULE ON SHEET SF604 FOR DECK PROFILE, DECK ATTACHMENT, CONCRETE FILL AND SLAB REINFORCEMENT REQUIREMENTS.
2. PROVIDE CONTROL JOINTS IN CONCRETE SLABS OVER STEEL DECK PER DETAIL D4/SF501 AND GSN SECTION 3.4.H. SUBMIT CONTROL JOINT AND SLAB REINFORCEMENT PLANS FOR REVIEW.
3. PROVIDE REINFORCEMENT/FRAMING AT OPENINGS THROUGH STEEL DECK PER TYPICAL OPENING REINFORCING DETAIL D1/SF501.
4. SEE C1/SF501 FOR TYPICAL STUD PLACEMENT DIAGRAMS FOR HEADED STUD ANCHORS ON COMPOSITE BEAMS. ADJUST STUD HEIGHT AT SLAB RECESSES PER DETAIL B5/SF501.
5. PROVIDE STEEL DECK FILLER PER DETAIL C2/SF501 WHERE REQUIRED FOR HEADED STUD PLACEMENT.
6. DO NOT PLACE CONDUIT IN CONCRETE OVER STEEL DECK.
7. PROVIDE HOUSEKEEPING PADS AND CURBS PER DETAIL C4/SF501. VERIFY DIMENSIONS AND LOCATIONS OF CURBS AND PADS WITH MECHANICAL AND EQUIPMENT SUPPLIER.
8. STRUCTURE OVER MECHANICAL ROOMS HAS BEEN DESIGNED FOR UP TO __ PSF FOR PIPES AND OTHER HANGING LOADS. IF THIS ALLOWANCE IS EXCEEDED, CONTACT ENGINEER PRIOR TO INSTALLATION.

ELEVATOR NOTES

1. CONTRACTOR TO COORDINATE LOCATION OF GUIDERAIL SUPPORT COLUMNS, SEPARATOR BEAMS, MACHINE BEAMS AND HOIST BEAMS. MEMBERS SHOWN ARE SCHEMATIC AND MAY CHANGE BASED ON ELEVATOR MANUFACTURER REQUIREMENTS.
2. CONTRACTOR SHALL VERIFY ELEVATOR PIT DEPTH AND SUMP REQUIREMENTS PRIOR TO PLACING CONCRETE AT PIT.

HKS

ARCHITECT
HKS ARCHITECTS, INC.
90 SOUTH 400 WEST, #110
SALT LAKE CITY, UTAH 84101

CIVIL ENGINEER
GREAT BASIN ENGINEERING, INC
5746 SOUTH 1475 EAST
OGDEN, UTAH 84403

LANDSCAPE ARCHITECT
MGB+A STUDIO
145 WEST 200 SOUTH
SALT LAKE CITY, UTAH 84101

STRUCTURAL ENGINEER
REAVELEY ENGINEERS
250 EAST 200 SOUTH, SUITE 1000
SALT LAKE CITY, UTAH 84111

M/P/FP ENGINEER
RESOLUT GROUP
181 EAST 5600 SOUTH, SUITE 200
MURRAY, UTAH 84107

E/T ENGINEER
LYNK ENGINEERS
324 SOUTH STATE STREET, SUITE 400
SALT LAKE CITY, UTAH 84111

Intermountain Health

UTAH VALLEY SPORTS PERFORMANCE CENTER

PROJECT ADDRESS: WEST 880 NORTH 200 WEST PROVO, UTAH 84604

SEAL & SIGNATURE

KEY PLAN

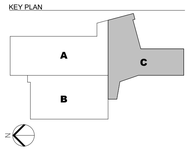

REVISION

NO.	DESCRIPTION	DATE

HKS PROJECT NUMBER
27487.000

DATE
08/26/2026

ISSUE
DESIGN DEVELOPMENT

SHEET TITLE
LEVEL 02 - FLOOR FRAMING PLAN- SECTOR C

SHEET NO.
SF102C

© HKS, INC.

TITLE BLOCK VERSION: 20210930
MODEL: Autodesk Docs://27487.000_IH_UV Sports Performance Center_2025/S_IH-UV_Sports-Performance-Center_2025.rvt
TEMPLATE VERSION:
PRINT DATE: 8/26/2026 5:19:50 PM

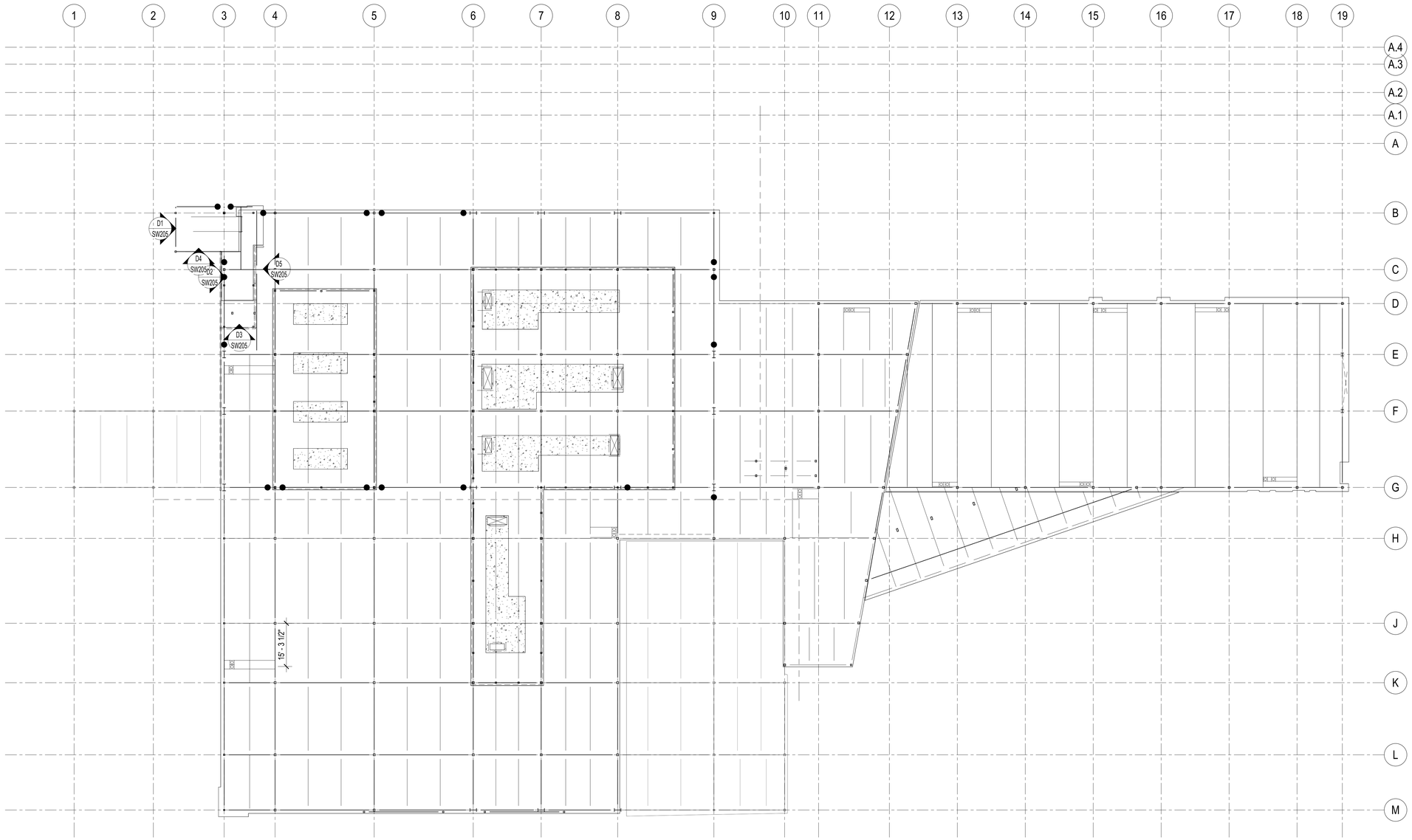

A1 / SF103 LEVEL 03 - OVERALL ROOF FRAMING PLAN

SCALE: 1/16" = 1'-0"

HKS

ARCHITECT
HKS ARCHITECTS, INC.
90 SOUTH 400 WEST, #110
SALT LAKE CITY, UTAH 84101

CIVIL ENGINEER
GREAT BASIN ENGINEERING, INC
5746 SOUTH 1475 EAST
OGDEN, UTAH 84403

LANDSCAPE ARCHITECT
MGB+A STUDIO
145 WEST 200 SOUTH
SALT LAKE CITY, UTAH 84101

STRUCTURAL ENGINEER
REAVELEY ENGINEERS
250 EAST 200 SOUTH, SUITE 1000
SALT LAKE CITY, UTAH 84111

M/P/FP ENGINEER
RESOLUT GROUP
181 EAST 5600 SOUTH, SUITE 200
MURRAY, UTAH 84107

E/T ENGINEER
LYNK ENGINEERS
324 SOUTH STATE STREET, SUITE 400
SALT LAKE CITY, UTAH 84111

Intermountain Health

UTAH VALLEY SPORTS PERFORMANCE CENTER

PROJECT ADDRESS: WEST 880 NORTH 200 WEST PROVO, UTAH 84604

SEAL & SIGNATURE

KEY PLAN

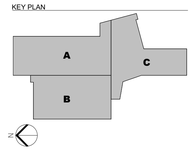

REVISION

NO.	DESCRIPTION	DATE

HKS PROJECT NUMBER
27487.000

DATE
08/26/2026

ISSUE
DESIGN DEVELOPMENT

SHEET TITLE
LEVEL 03 - OVERALL ROOF FRAMING PLAN

SHEET NO.
SF103

© HKS, INC.

TITLE BLOCK VERSION: 20210930
MODEL: Autodesk Docs://27487.000_IH - UV Sports Performance Center 2025/S_IH-UV_Sports-Performance-Center_2025.rvt
PRINT DATE: 8/26/2026 5:19:51 PM TEMPLATE VERSION:

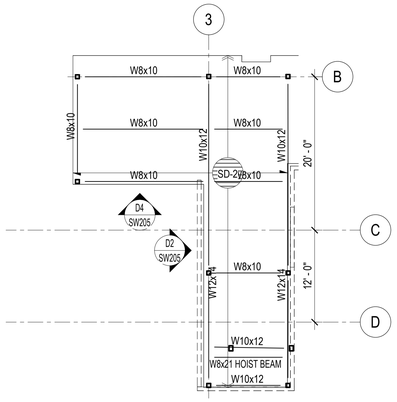

D1 SF103A NORTH STAIR ROOF FRAIMING PLAN

SCALE: 1/8" = 1'-0"

ROOF FRAMING PLAN NOTES

1. SEE ARCHITECTURAL FOR ROOF SLOPES AND DRAINS. PROVIDE STEEL FRAMES OR REINFORCE OPENINGS PER DETAIL D4/SF511 AT STEEL DECK AND PER DETAIL D1/SF501 AT COMPOSITE FRAMING.

NON-COMPOSITE FRAMING PLAN NOTES

1. SEE STEEL DECK SCHEDULE ON SHEET SF603 FOR DECK PROFILE AND DECK ATTACHMENT REQUIREMENTS.
2. PROVIDE FRAMING AT OPENINGS THROUGH STEEL DECK PER DETAIL D1/SF511. FOR ROUND OPENINGS LESS THAN 12 INCHES IN DIAMETER SEE DETAIL D2/SF511.
3. VERIFY SIZE WEIGHT, LOCATION AND CONFIGURATION OF ALL ROOF TOP EQUIPMENT WITH ARCHITECT AND MECHANICAL ENGINEER. PROVIDE STEEL FRAMES FOR SUPPORT OF ROOF TOP EQUIPMENT PER DETAIL D3/SF511. COORDINATE OPENINGS WITH MECHANICAL & ELECTRICAL.
4. SEE DETAIL C5/SF511 FOR SUPPORT OF HANGING MECHANICAL UNITS.

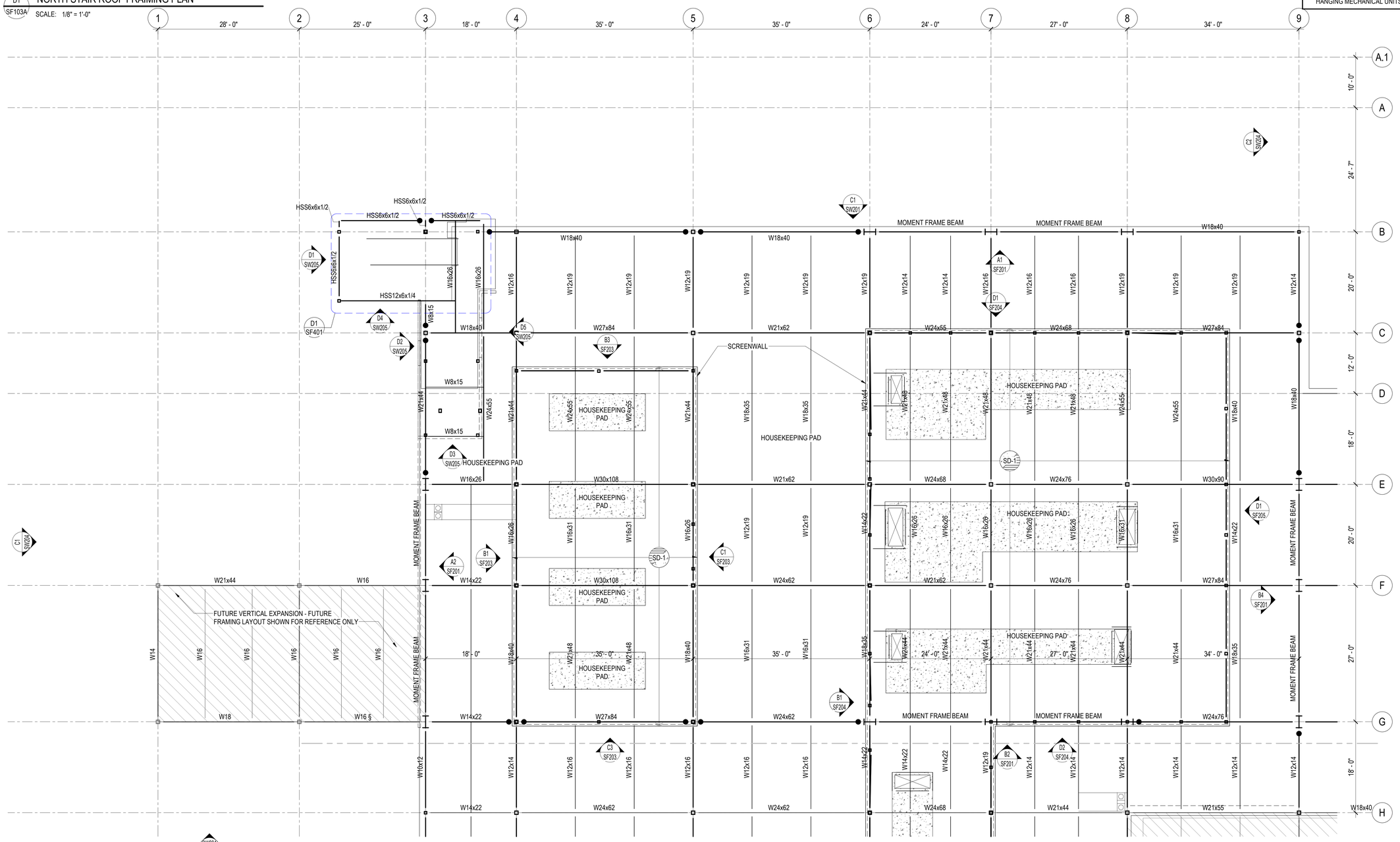
28' - 0"
25' - 0"
18' - 0"
35' - 0"
35' - 0"
24' - 0"
27' - 0"
34' - 0"
10' - 0"
24' - 7"
20' - 0"
12' - 0"
18' - 0"
20' - 0"
27' - 0"
18' - 0"
MOMENT FRAME BEAM
W18x40
SCREENWALL
HOUSEKEEPING PAD
SD-1
FUTURE VERTICAL EXPANSION - FUTURE FRAMING LAYOUT SHOWN FOR REFERENCE ONLY
HSS6x6x1/2
HSS12x6x1/4
HSS5x6x1/2
W16x26
W16x26
W8x15
W21x44
W16
W14
W18
W16 §
W21x44
W10x12
W14x22
W24x62
W27x84
W21x62
W24x68
W24x76
W30x90
W30x108
W18x35
W18x40
W21x55
W24x55
W24x68
W24x76
W27x84
W12x16
W12x19
W12x14
W12x16
W12x19
W12x14
W16x31
W14x22
W21x48
W21x44
W21x44
W21x44

ROOF FRAMING PLAN NOTES

1. SEE ARCHITECTURAL FOR ROOF SLOPES AND DRAINS. PROVIDE STEEL FRAMES OR REINFORCE OPENINGS PER DETAIL D4/SF511 AT STEEL DECK AND PER DETAIL D1/SF501 AT COMPOSITE FRAMING.

NON-COMPOSITE FRAMING PLAN NOTES

1. SEE STEEL DECK SCHEDULE ON SHEET SF603 FOR DECK PROFILE AND DECK ATTACHMENT REQUIREMENTS.
2. PROVIDE FRAMING AT OPENINGS THROUGH STEEL DECK PER DETAIL D1/SF511. FOR ROUND OPENINGS LESS THAN 12 INCHES IN DIAMETER SEE DETAIL D2/SF511.
3. VERIFY SIZE WEIGHT, LOCATION AND CONFIGURATION OF ALL ROOF TOP EQUIPMENT WITH ARCHITECT AND MECHANICAL ENGINEER. PROVIDE STEEL FRAMES FOR SUPPORT OF ROOF TOP EQUIPMENT PER DETAIL D3/SF511. COORDINATE OPENINGS WITH MECHANICAL & ELECTRICAL.
4. SEE DETAIL C5/SF511 FOR SUPPORT OF HANGING MECHANICAL UNITS.

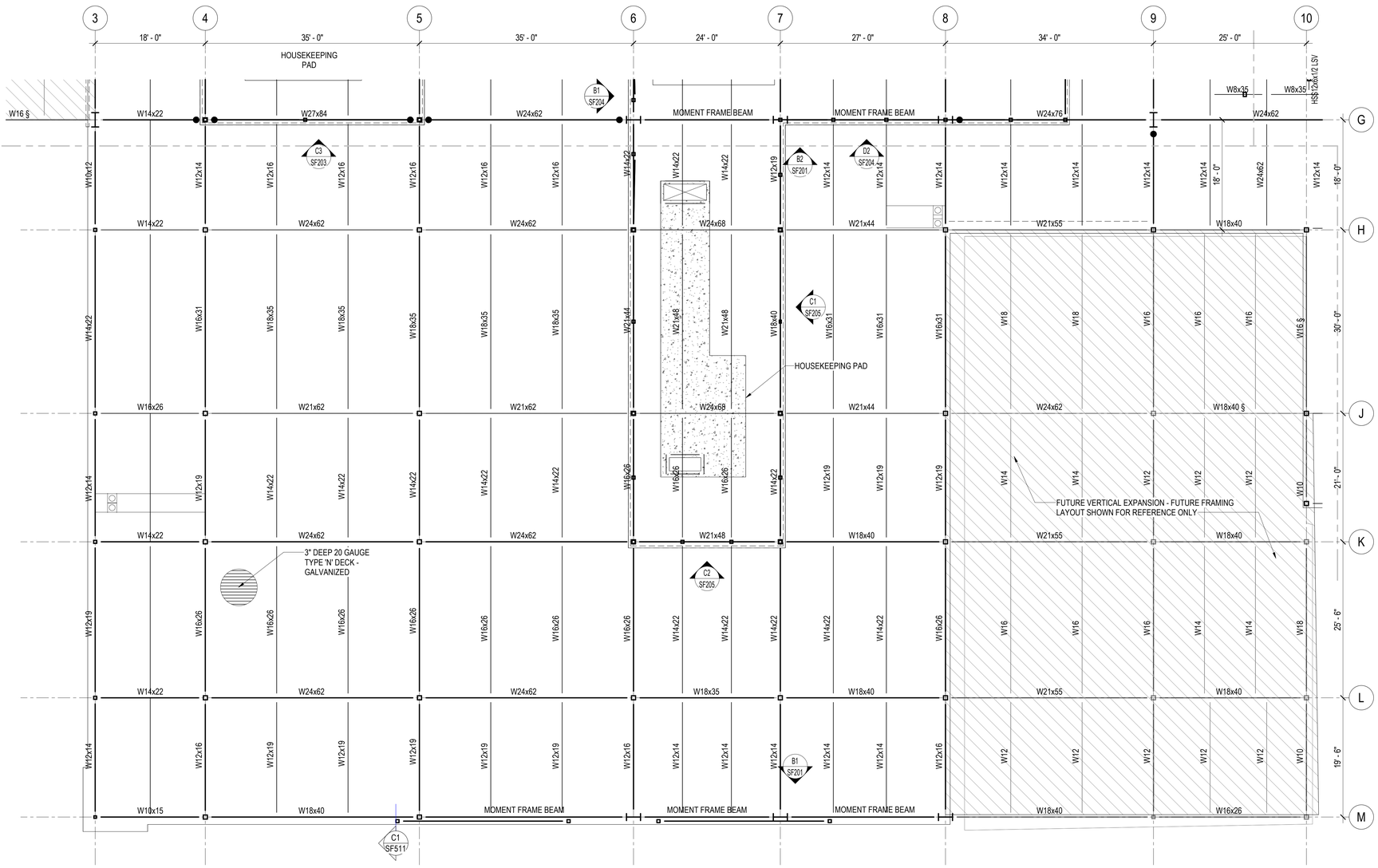

A1 SF103B LEVEL 03 -ROOF FRAMING PLAN- SECTOR B

SCALE: 1/8" = 1'-0"

HKS

ARCHITECT
HKS ARCHITECTS, INC.
90 SOUTH 400 WEST, #110
SALT LAKE CITY, UTAH 84101

CIVIL ENGINEER
GREAT BASIN ENGINEERING, INC
5746 SOUTH 1475 EAST
OGDEN, UTAH 84403

LANDSCAPE ARCHITECT
MGB+A STUDIO
145 WEST 200 SOUTH
SALT LAKE CITY, UTAH 84101

STRUCTURAL ENGINEER
REAVELEY ENGINEERS
250 EAST 200 SOUTH, SUITE 1000
SALT LAKE CITY, UTAH 84111

M/P/FP ENGINEER
RESOLUT GROUP
181 EAST 5600 SOUTH, SUITE 200
MURRAY, UTAH 84107

E/T ENGINEER
LYNK ENGINEERS
324 SOUTH STATE STREET, SUITE 400
SALT LAKE CITY, UTAH 84111

Intermountain Health

UTAH VALLEY SPORTS PERFORMANCE CENTER

PROJECT ADDRESS: WEST 880 NORTH 200 WEST PROVO, UTAH 84604

SEAL & SIGNATURE

KEY PLAN

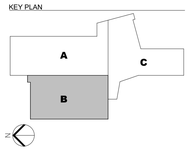

REVISION

NO.	DESCRIPTION	DATE

HKS PROJECT NUMBER
27487.000

DATE
08/26/2026

ISSUE
DESIGN DEVELOPMENT

SHEET TITLE
LEVEL 03 -ROOF FRAMING PLAN- SECTOR B

SHEET NO.
SF103B

© HKS, INC.

TITLE BLOCK VERSION: 20210930
MODEL: Autodesk Docs://27487.000_IH - UV Sports Performance Center_2025/S_IH-UV_Sports-Performance-Center_2025.rvt
PRINT DATE: 8/26/2026 5:19:52 PM TEMPLATE VERSION:

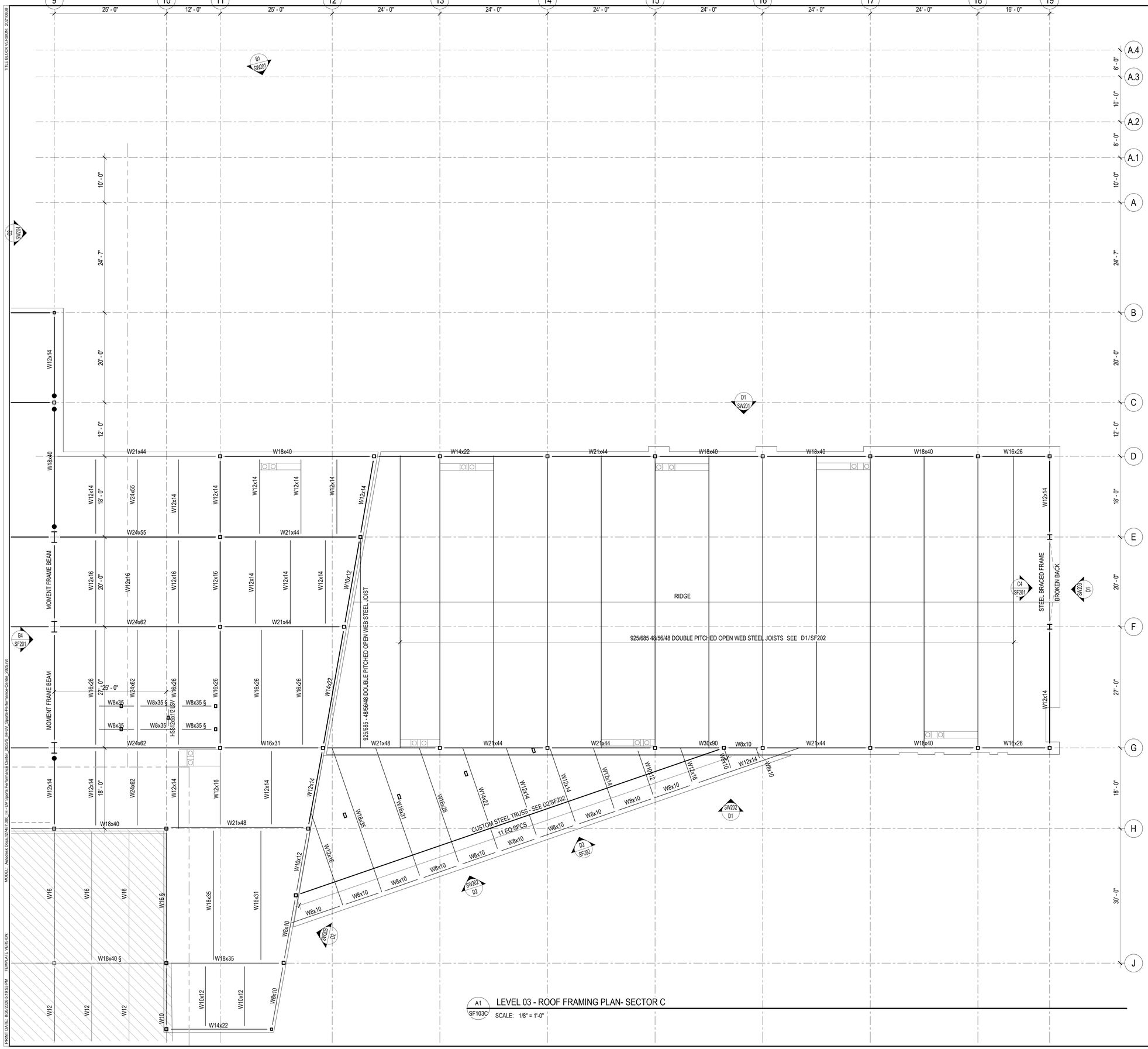

A1 SF103C LEVEL 03 - ROOF FRAMING PLAN- SECTOR C

SCALE: 1/8" = 1'-0"

ROOF FRAMING PLAN NOTES

1. SEE ARCHITECTURAL FOR ROOF SLOPES AND DRAINS. PROVIDE STEEL FRAMES OR REINFORCE OPENINGS PER DETAIL D4/SF511 AT STEEL DECK AND PER DETAIL D1/SF501 AT COMPOSITE FRAMING.

NON-COMPOSITE FRAMING PLAN NOTES

1. SEE STEEL DECK SCHEDULE ON SHEET SF603 FOR DECK PROFILE AND DECK ATTACHMENT REQUIREMENTS.
2. PROVIDE FRAMING AT OPENINGS THROUGH STEEL DECK PER DETAIL D1/SF511. FOR ROUND OPENINGS LESS THAN 12 INCHES IN DIAMETER SEE DETAIL D2/SF511.
3. VERIFY SIZE WEIGHT, LOCATION AND CONFIGURATION OF ALL ROOF TOP EQUIPMENT WITH ARCHITECT AND MECHANICAL ENGINEER. PROVIDE STEEL FRAMES FOR SUPPORT OF ROOF TOP EQUIPMENT PER DETAIL D3/SF511. COORDINATE OPENINGS WITH MECHANICAL & ELECTRICAL.
4. SEE DETAIL C5/SF511 FOR SUPPORT OF HANGING MECHANICAL UNITS.

OPEN WEB JOIST FRAMING PLAN NOTES

1. OPEN WEB STEEL JOISTS AND JOIST GIRDERS SHALL BE DESIGNED BY THE MANUFACTURER TO SUPPORT THE MECHANICAL AND LATERAL LOADS SHOWN ON THE ROOF FRAMING PLANS IN ADDITION TO THE UNIFORM AND POINT LOADS SHOWN. LOADS SHOWN ARE ASD UNO
2. ±#.##k – INDICATES POINT LOAD ON STEEL JOIST IN ADDITION TO UNIFORM LOADING SHOWN. + INDICATES DOWNWARD AND - INDICATES UPWARD LOADS. LOADS SHOWN ARE UNFACTORED, UNO.
3. T/C X.XXK INDICATES ADDITIONAL TOP CHORD AXIAL FORCE ON STEEL JOIST OR GIRDER. THIS FORCE IS A FACTORED SEISMIC LOAD THAT SHALL BE CONSIDERED IN BOTH TENSION AND COMPRESSION AND INCLUDES APPLICABLE OVERSTRENGTH FACTORS PER THE GOVERNING BUILDING CODE. STEEL JOISTS AND GIRDERS WITH T/C FORCE SHALL BE DESIGNED AS COLLECTOR ELEMENTS.
4. ALL LOADS SUPPORTED BY OPEN WEB STEEL JOISTS AND GIRDERS SHALL BE LOCATED WITHIN 6" OF JOIST OR GIRDER PANEL POINT OR THE JOIST OR GIRDER SHALL BE REINFORCED PER DETAIL .
5. HORIZONTAL CROSS BRIDGING SHALL BE SIZED AND SUPPLIED BY THE JOIST MANUFACTURER. CONNECT TO WALLS AS INDICATED ON DETAILS .
6. WHERE SKYLIGHTS OR MECHANICAL UNITS INTERRUPT HORIZONTAL BRIDGING, PROVIDE CROSS BRIDGING AT JOIST SPACES ON EACH SIDE, TYP.
7. OPEN WEB STEEL JOISTS BEARING AT CONCRETE OR MASONRY WALLS SHALL BE DESIGNED FOR A SEISMIC AXIAL LOAD TO BE TRANSFERRED THROUGH THE JOIST BEARING SEAT. MINIMUM UNFACTORED LOAD SHALL BE 4.0 K AT K JOISTS, 6.0 K AT LH & DLH JOISTS, UNO.
8. ALL OPEN WEB STEEL JOISTS WITH A SLOPE OF 3/8" PER FOOT OR LARGER SHALL HAVE SLOPED BEARING SEATS.
9. OPEN WEB STEEL JOISTS AT ROOF AREAS SHALL BE DESIGNED FOR THE FOLLOWING WIND ASD NET UPLIFT LOADS: ____PSF WITHIN ____FT OF ROOF EDGES, ____PSF AT ALL OTHER AREAS.

HKS

ARCHITECT
HKS ARCHITECTS, INC.
90 SOUTH 400 WEST, #110
SALT LAKE CITY, UTAH 84101

CIVIL ENGINEER
GREAT BASIN ENGINEERING, INC
5746 SOUTH 1475 EAST
OGDEN, UTAH 84403

LANDSCAPE ARCHITECT
MGB+A STUDIO
145 WEST 200 SOUTH
SALT LAKE CITY, UTAH 84101

STRUCTURAL ENGINEER
REAVELEY ENGINEERS
250 EAST 200 SOUTH, SUITE 1000
SALT LAKE CITY, UTAH 84111

M/P/FP ENGINEER
RESOLUT GROUP
181 EAST 5600 SOUTH, SUITE 200
MURRAY, UTAH 84107

E/T ENGINEER
LYNK ENGINEERS
324 SOUTH STATE STREET, SUITE 400
SALT LAKE CITY, UTAH 84111

Intermountain Health

UTAH VALLEY SPORTS PERFORMANCE CENTER

PROJECT ADDRESS: WEST 880 NORTH 200 WEST PROVO, UTAH 84604

SEAL & SIGNATURE

KEY PLAN

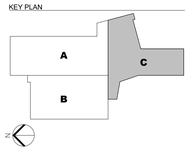

REVISION

NO.	DESCRIPTION	DATE

HKS PROJECT NUMBER
27487.000

DATE
08/26/2026

ISSUE
DESIGN DEVELOPMENT

SHEET TITLE
LEVEL 03 - ROOF FRAMING PLAN- SECTOR C

SHEET NO.
SF103C

© HKS, INC.

TITLE BLOCK VERSION: 20210930
MODEL: Autodesk Docs://27487.000_IH-UV Sports Performance Center 2025/S_IH-UV_Sports-Performance-Center_2025.rvt
PRINT DATE: 8/26/2026 5:19:53 PM TEMPLATE VERSION:

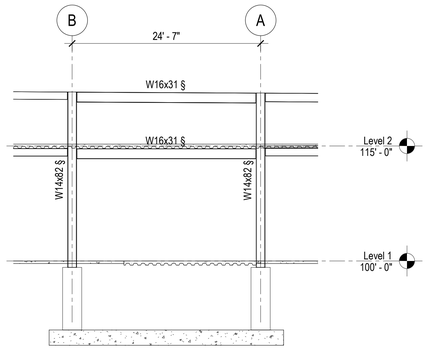

C1 SF201 MOMENT FRAME ELEVATION
SCALE: 1/8" = 1'-0"

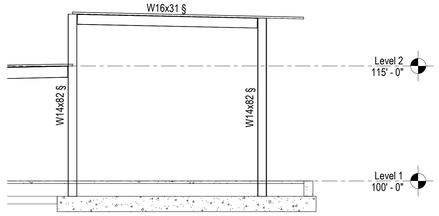

C2 SF201 MOMENT FRAME ELEVATION
SCALE: 1/8" = 1'-0"

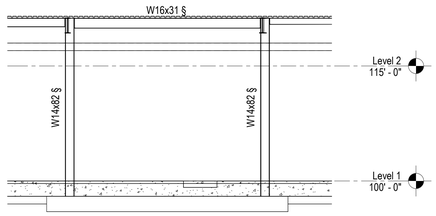

C3 SF201 MOMENT FRAME ELEVATION
SCALE: 1/8" = 1'-0"

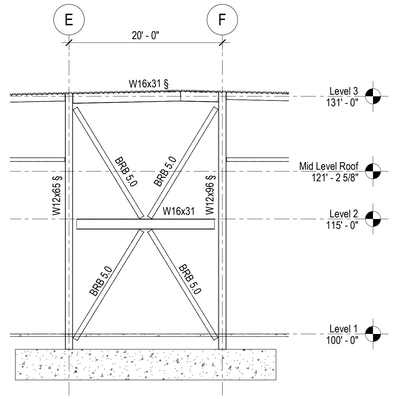

C4 SF201 BRACED FRAME ELEVATION
SCALE: 1/8" = 1'-0"

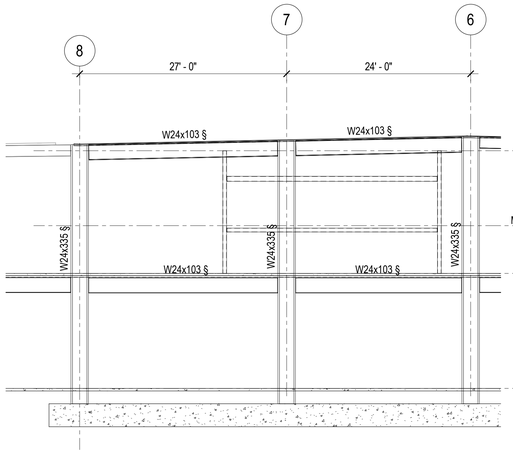

B1 SF201 MOMENT FRAME ELEVATION
SCALE: 1/8" = 1'-0"

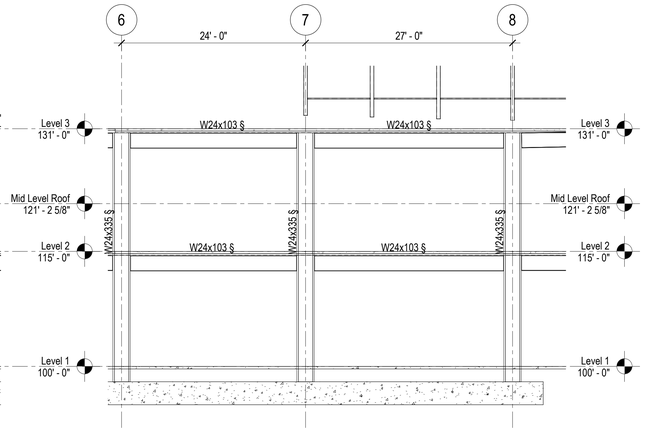

B2 SF201 MOMENT FRAME ELEVATION
SCALE: 1/8" = 1'-0"

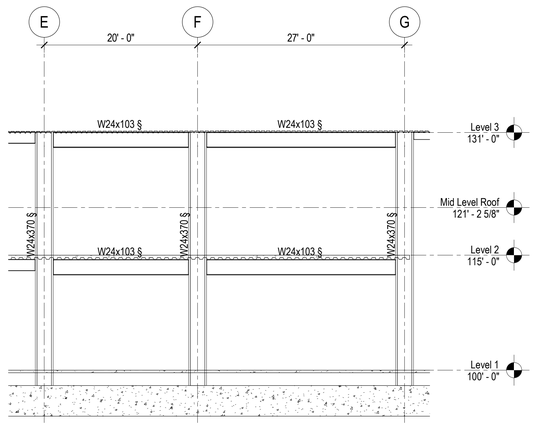

B4 SF201 MOMENT FRAME ELEVATION
SCALE: 1/8" = 1'-0"

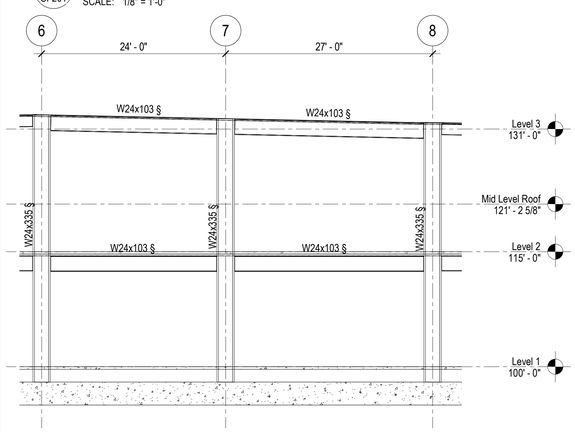

A1 SF201 MOMENT FRAME ELEVATION
SCALE: 1/8" = 1'-0"

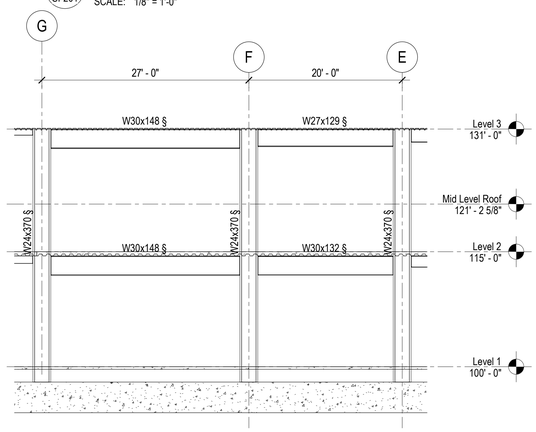

A2 SF201 MOMENT FRAME ELEVATION
SCALE: 1/8" = 1'-0"

SIDEPLATE MOMENT FRAME NOTES

1. [Z] INDICATES MOMENT FRAME COLUMN BASE PLATE & ANCHOR BOLT SCHEDULE MARK. SEE SHEET -/--- .
2. (#) INDICATES SIDEPLATE® SCHEDULE MARK. SEE SHEETS -/--- & -/--- .
3. VERIFY ALL DATUM ELEVATIONS W/ ARCHITECTURAL DRAWINGS.
4. SEE SHEETS SF211 FOR SIDEPLATE® NOTES.
5. SEE SHEETS SF212-SF217 FOR SIDEPLATE® DETAILS.
6. ALL MOMENT FRAME BEAMS HAVE A PROTECTED ZONE PER DETAIL PROTECTED ZONES SHALL BE CLEARLY MARKED ON THE STEEL MEMBERS IN THE FIELD. AREAS WITHIN THE PROTECTED ZONE SHALL COMPLY WITH THE FOLLOWING REQUIREMENTS.
   A. WITHIN THE PROTECTED ZONE, DISCONTINUITIES CREATED BY FABRICATION OR ERECTION OPERATIONS, SUCH AS TACK WELDS, ERECTION AIDS, AIR-ARC GOUGING AND THERMAL CUTTING SHALL BE REPAIRED. REPAIR METHOD SHALL BE APPROVED BY THE ENGINEER OF RECORD.
   B. WELDED SHEAR STUDS AND DECKING ATTACHMENTS THAT PENETRATE THE BEAM FLANGE SHALL NOT BE PLACED ON THE BEAM FLANGES WITHIN THE PROTECTED ZONE. DECKING ARC SPOT WELDS AS REQUIRED TO SECURE THE DECKING ARE PERMITTED.
   C. WELDING, BOLTING, SCREWING OR SHOT IN ATTACHMENTS FOR PERIMETER EDGE ANGLES, EXTERIOR FACADES, PARTITIONS, DUCT WORK, PIPING OR OTHER CONSTRUCTION SHALL NOT BE PLACED WITHIN THE PROTECTED ZONE.

BUCKLING-RESTRAINED BRACED FRAME NOTES AND LEGEND

1. [ ] - INDICATES BRACED FRAME COLUMN BASE PLATE TYPE. SEE SF219
2. [DEAD / LIVE] - INDICATED LOADS ARE GRAVITY BEAM END REACTIONS AT GUSSET PLATE, KIPS
3. BRB SUPPLIER SHALL PROVIDE THE DESIGN OF BRACES, CONNECTIONS, WELDS AND GUSSET PLATES, INCLUDING DETAILS AND SCHEDULES IN ACCORDANCE WITH AISC 341 SEISMIC PROVISIONS FOR STRUCTURAL STEEL BUILDINGS. DESIGN SHALL INCLUDE THE EFFECTS OF UNBALANCED BRACE FORCES AND GRAVITY BEAM END REACTIONS. DESIGN SHALL CALCULATE WEB BUCKLING AND CRIPPLING, AND SHALL PROVIDE WEB STIFFENER PLATES, AS NEEDED. BRB INFORMATION SHOWN ON CONSTRUCTION DOCUMENTS RELATING TO BRACES, CONNECTIONS, AND GUSSET PLATES OF SUCH ARE INCLUDED FOR GENERAL DESIGN CONCEPT AND BIDDING PURPOSES.
4. "BRB X.X" INDICATES THE CROSS SECTIONAL AREA OF THE YIELDING SEGMENT OF THE STEEL CORE (Asc, IN SQUARE INCHES) THAT SHALL BE PROVIDED.
5. YIELD STRESS OF STEEL CORE (Fysc) SHALL BE VERIFIED BY COUPON TESTING AND SHALL HAVE A RANGE OF 42 KSI ± 4 KSI.
6. BRACE CONNECTIONS SHALL BE DESIGNED TO RESIST FORCES CALCULATED BASED UPON THE ADJUSTED BRACE STRENGTH, USING THE FOLLOWING FACTORS.
   MAX COMPRESSION STRENGTH FACTOR. β = _.__
   MAX STRAIN HARDENING FACTOR. ω = _.__
7. STIFFNESS MODIFICATION FACTORS (Kf) ARE BASED ON WORKPOINT DIMENSIONS AND SHALL BE WITHIN 10% OF THOSE INDICATED.
8. BRACES SHALL BE DESIGNED, TESTED AND DETAILED TO ACCOMMODATE DEFORMATIONS CORRESPONDING TO A STORY DRIFT OF AT LEAST 2% OF THE STORY HEIGHT OR TWO TIMES THE DESIGN STORY DRIFT INDICATED IN THE GENERAL STRUCTURAL NOTES, WHICHEVER IS LARGER.
9. BRB SUPPLIER SHALL PROVIDE CASING SIZES WITH MAXIMUM DIMENSIONS OF __" VERTICAL AND __" HORIZONTAL. ALL CONNECTIONS SHALL BE [WELDED, BOLTED, PINNED] UNO.
10. PROTECTED ZONES OF BRB'S AND CONNECTIONS SHALL COMPLY WITH DETAIL .
11. GUSSET PLATE STIFFENERS SHALL BE WELDED TO GUSSET PLATE WITH 1/4" MIN. FILLET WELDS ON EACH SIDE
12. VERIFY ALL DATUM ELEVATIONS WITH ARCHITECTURAL DRAWINGS.

HKS

ARCHITECT
HKS ARCHITECTS, INC.
90 SOUTH 400 WEST, #110
SALT LAKE CITY, UTAH 84101

CIVIL ENGINEER
GREAT BASIN ENGINEERING, INC
5746 SOUTH 1475 EAST
OGDEN, UTAH 84403

LANDSCAPE ARCHITECT
MGB+A STUDIO
145 WEST 200 SOUTH
SALT LAKE CITY, UTAH 84101

STRUCTURAL ENGINEER
REAVELEY ENGINEERS
250 EAST 200 SOUTH, SUITE 1000
SALT LAKE CITY, UTAH 84111

M/P/FP ENGINEER
RESOLUT GROUP
181 EAST 5600 SOUTH, SUITE 200
MURRAY, UTAH 84107

E/T ENGINEER
LYNK ENGINEERS
324 SOUTH STATE STREET, SUITE 400
SALT LAKE CITY, UTAH 84111

Intermountain Health

UTAH VALLEY SPORTS PERFORMANCE CENTER

PROJECT ADDRESS: WEST 880 NORTH 200 WEST PROVO, UTAH 84604

SEAL & SIGNATURE

KEY PLAN

REVISION

NO.	DESCRIPTION	DATE

HKS PROJECT NUMBER
27487.000

DATE
08/26/2026

ISSUE
DESIGN DEVELOPMENT

SHEET TITLE
LATERAL FRAME ELEVATIONS

SHEET NO.
SF201

© HKS, INC.

TITLE BLOCK VERSION: 20210930
MODEL: Autodesk Docs://27487.000_IH - UV Sports Performance Center 2025/S_IH-UV_Sports-Performance-Center_2025.rvt
PRINT DATE: 8/26/2026 5:19:53 PM TEMPLATE VERSION:

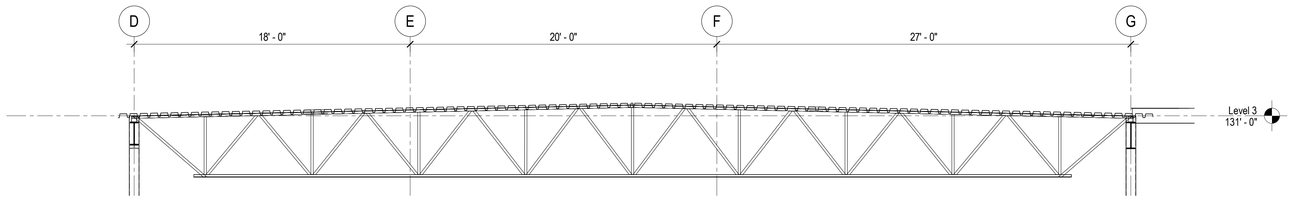

D1 / SF202 DOUBLE PITCHED JOIST ELEVATION

SCALE: 1/4" = 1'-0"

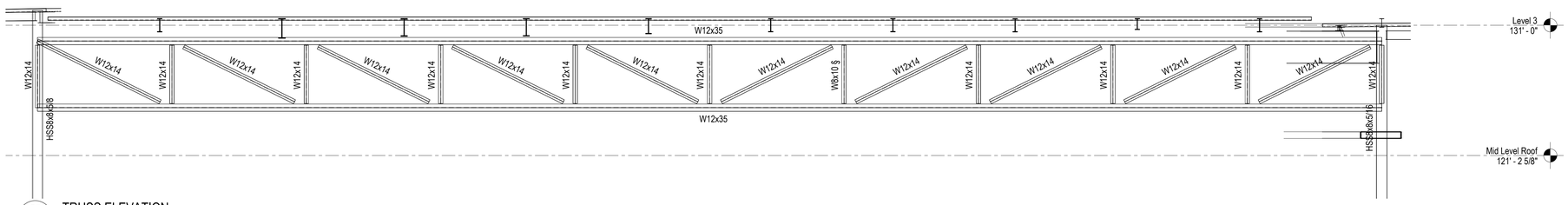

D2 / SF202 TRUSS ELEVATION

SCALE: 1/4" = 1'-0"

HKS

ARCHITECT
HKS ARCHITECTS, INC.
90 SOUTH 400 WEST, #110
SALT LAKE CITY, UTAH 84101

CIVIL ENGINEER
GREAT BASIN ENGINEERING, INC
5746 SOUTH 1475 EAST
OGDEN, UTAH 84403

LANDSCAPE ARCHITECT
MGB+A STUDIO
145 WEST 200 SOUTH
SALT LAKE CITY, UTAH 84101

STRUCTURAL ENGINEER
REAVELEY ENGINEERS
250 EAST 200 SOUTH, SUITE 1000
SALT LAKE CITY, UTAH 84111

M/P/FP ENGINEER
RESOLUT GROUP
181 EAST 5600 SOUTH, SUITE 200
MURRAY, UTAH 84107

E/T ENGINEER
LYNK ENGINEERS
324 SOUTH STATE STREET, SUITE 400
SALT LAKE CITY, UTAH 84111

Intermountain Health

UTAH VALLEY SPORTS PERFORMANCE CENTER

PROJECT ADDRESS: WEST 880 NORTH 200 WEST PROVO, UTAH 84604

SEAL & SIGNATURE

KEY PLAN

REVISION

NO.	DESCRIPTION	DATE

HKS PROJECT NUMBER
27487.000

DATE
08/26/2026

ISSUE
DESIGN DEVELOPMENT

SHEET TITLE
TRUSS & JOISTS ELEVATIONS

SHEET NO.
SF202

© HKS, INC.

TITLE BLOCK VERSION: 20210930
MODEL: Autodesk Docs://27487.000_IH - UV Sports Performance Center 2025/S_IH-UV_Sports-Performance-Center_2025.rvt
PRINT DATE: 8/26/2026 5:19:24 PM TEMPLATE VERSION:

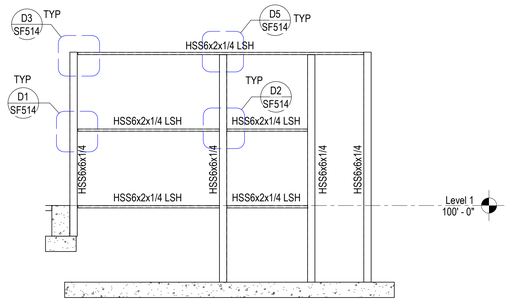

D1 SF203 SCREENWALL ELEVATIONS

SCALE: 1/4" = 1'-0"

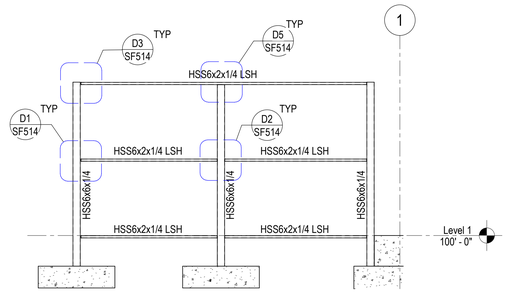

D2 SF203 SCREENWALL ELEVATIONS

SCALE: 1/4" = 1'-0"

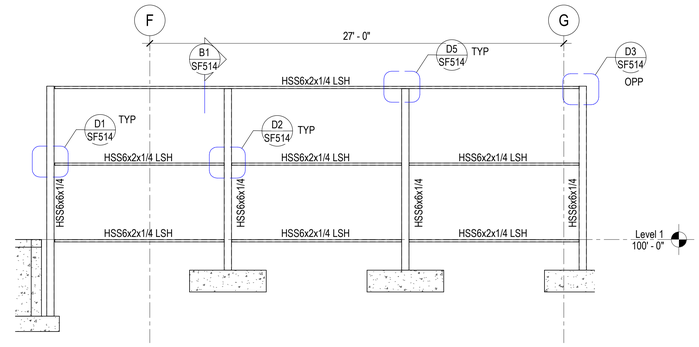

D3 SF203 SCREENWALL ELEVATIONS

SCALE: 1/4" = 1'-0"

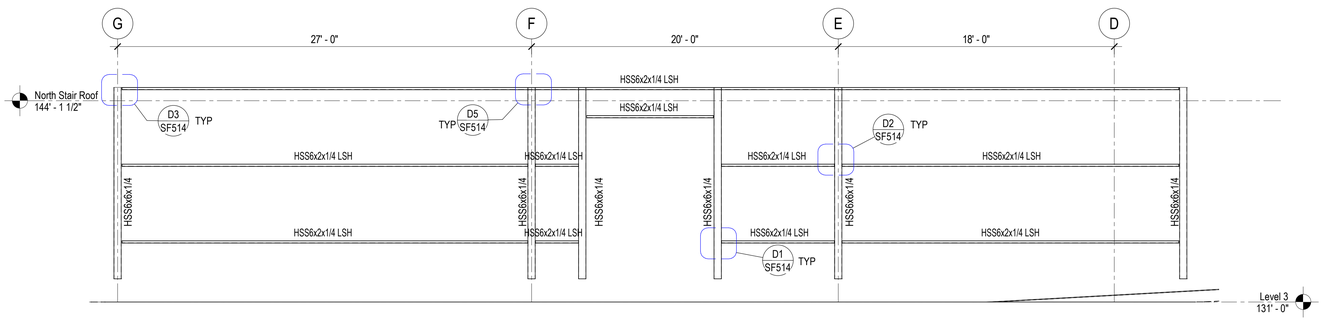

C1 SF203 SCREENWALL ELEVATIONS

SCALE: 1/4" = 1'-0"

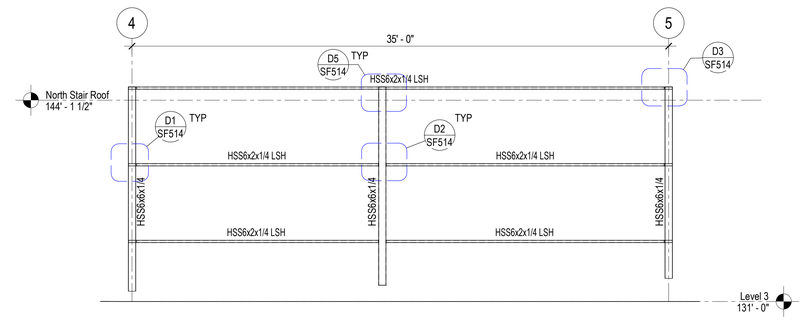

C3 SF203 SCREENWALL ELEVATIONS

SCALE: 1/4" = 1'-0"

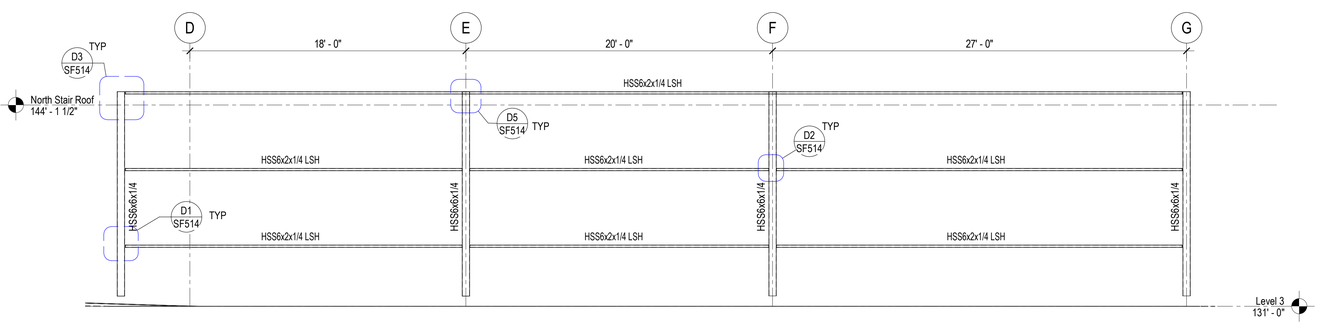

B1 SF203 SCREENWALL ELEVATIONS

SCALE: 1/4" = 1'-0"

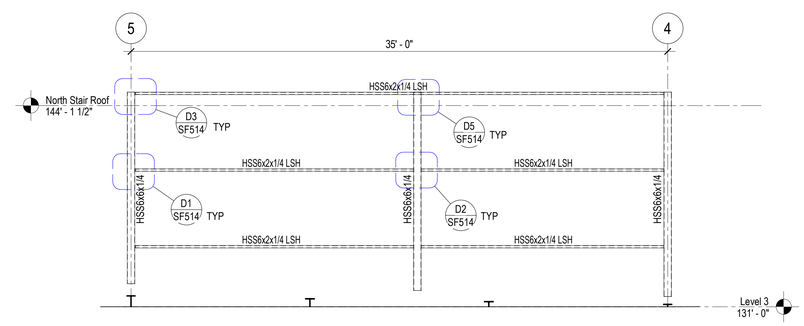

B3 SF203 SCREENWALL ELEVATIONS

SCALE: 1/4" = 1'-0"

HKS

ARCHITECT
HKS ARCHITECTS, INC.
90 SOUTH 400 WEST, #110
SALT LAKE CITY, UTAH 84101

CIVIL ENGINEER
GREAT BASIN ENGINEERING, INC
5746 SOUTH 1475 EAST
OGDEN, UTAH 84403

LANDSCAPE ARCHITECT
MGB+A STUDIO
145 WEST 200 SOUTH
SALT LAKE CITY, UTAH 84101

STRUCTURAL ENGINEER
REAVELEY ENGINEERS
250 EAST 200 SOUTH, SUITE 1000
SALT LAKE CITY, UTAH 84111

M/P/FP ENGINEER
RESOLUT GROUP
181 EAST 5600 SOUTH, SUITE 200
MURRAY, UTAH 84107

E/T ENGINEER
LYNK ENGINEERS
324 SOUTH STATE STREET, SUITE 400
SALT LAKE CITY, UTAH 84111

Intermountain Health

UTAH VALLEY SPORTS PERFORMANCE CENTER

PROJECT ADDRESS: WEST 880 NORTH 200 WEST PROVO, UTAH 84604

SEAL & SIGNATURE

KEY PLAN

REVISION

NO.	DESCRIPTION	DATE

HKS PROJECT NUMBER
27487.000

DATE
08/26/2026

ISSUE
DESIGN DEVELOPMENT

SHEET TITLE
SCREENWALL ELEVATIONS

SHEET NO.
SF203

© HKS, INC.

TITLE BLOCK VERSION: 20210930
MODEL: Autodesk Docs://27487.000_IHU_UV Sports Performance Center_2025/S_IHUV_Sports Performance Center_2025.rvt
PRINT DATE: 8/26/2026 5:19:55 PM TEMPLATE VERSION:

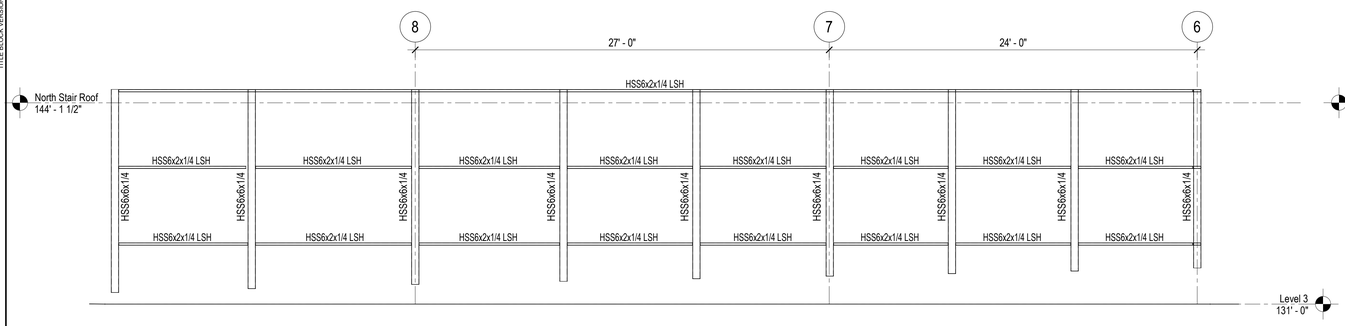

D1 / SF204 SCREENWALL ELEVATIONS

SCALE: 1/4" = 1'-0"

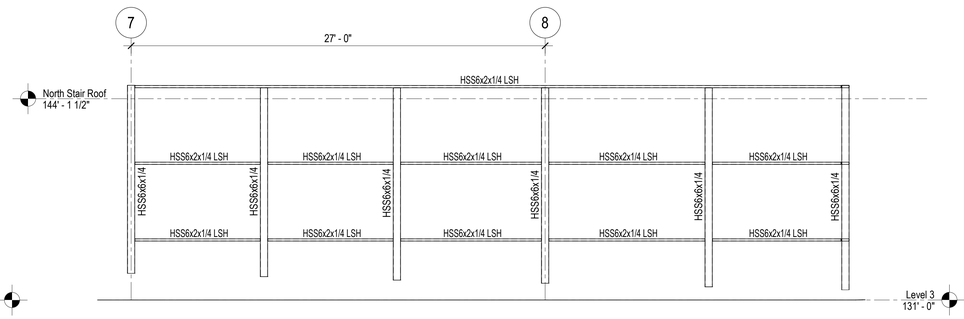

D2 / SF204 SCREENWALL ELEVATIONS

SCALE: 1/4" = 1'-0"

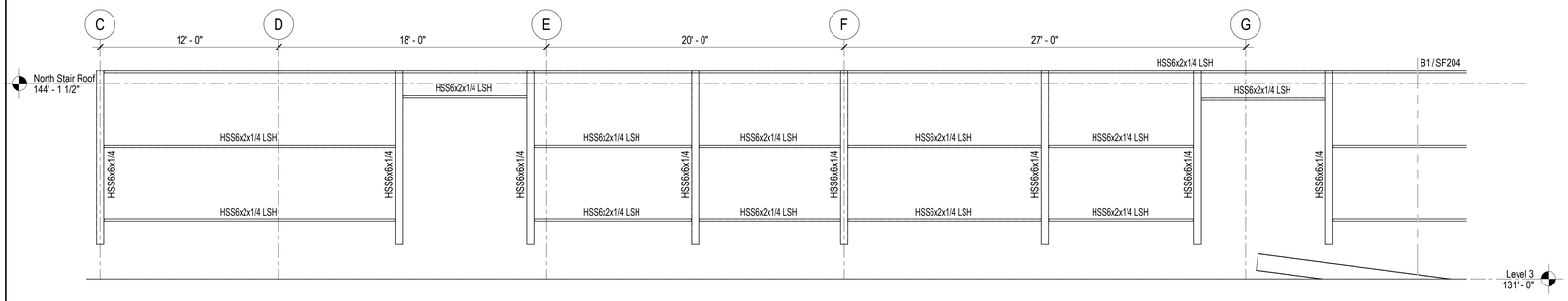

C1 / SF204 SCREENWALL ELEVATIONS

SCALE: 1/4" = 1'-0"

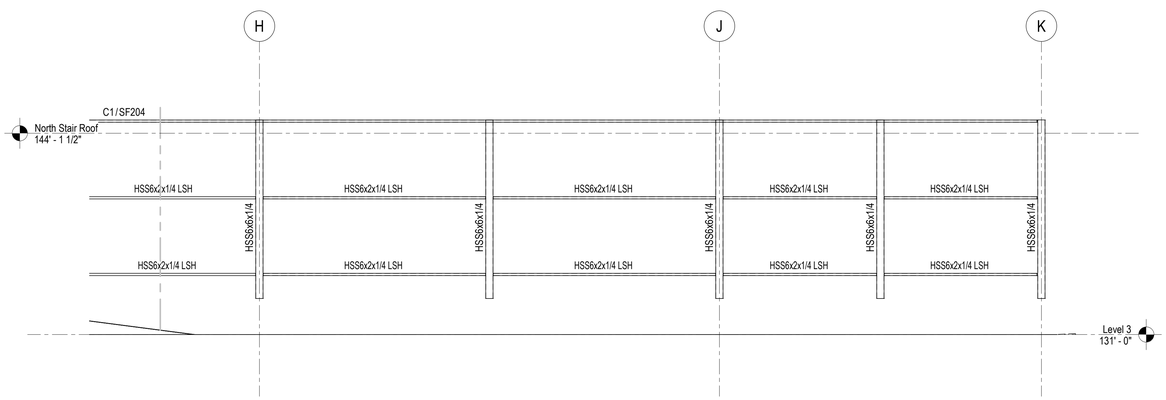

B1 / SF204 SCREENWALL ELEVATIONS

SCALE: 1/4" = 1'-0"

HKS

ARCHITECT
HKS ARCHITECTS, INC.
90 SOUTH 400 WEST, #110
SALT LAKE CITY, UTAH 84101

CIVIL ENGINEER
GREAT BASIN ENGINEERING, INC
5746 SOUTH 1475 EAST
OGDEN, UTAH 84403

LANDSCAPE ARCHITECT
MGB+A STUDIO
145 WEST 200 SOUTH
SALT LAKE CITY, UTAH 84101

STRUCTURAL ENGINEER
REAVELEY ENGINEERS
250 EAST 200 SOUTH, SUITE 1000
SALT LAKE CITY, UTAH 84111

M/P/FP ENGINEER
RESOLUT GROUP
181 EAST 5600 SOUTH, SUITE 200
MURRAY, UTAH 84107

E/T ENGINEER
LYNK ENGINEERS
324 SOUTH STATE STREET, SUITE 400
SALT LAKE CITY, UTAH 84111

Intermountain Health

UTAH VALLEY SPORTS PERFORMANCE CENTER

PROJECT ADDRESS: WEST 880 NORTH 200 WEST PROVO, UTAH 84604

SEAL & SIGNATURE

KEY PLAN

REVISION

NO.	DESCRIPTION	DATE

HKS PROJECT NUMBER
27487.000

DATE
08/26/2026

ISSUE
DESIGN DEVELOPMENT

SHEET TITLE
SCREENWALL ELEVATIONS

SHEET NO.
SF204

© HKS, INC.

TITLE BLOCK VERSION: 20210930
MODEL: Autodesk Docs://27487.000_IH - UV Sports Performance Center 2025/S_IH-UV_Sports-Performance-Center_2025.rvt
PRINT DATE: 8/26/2026 5:19:55 PM TEMPLATE VERSION:

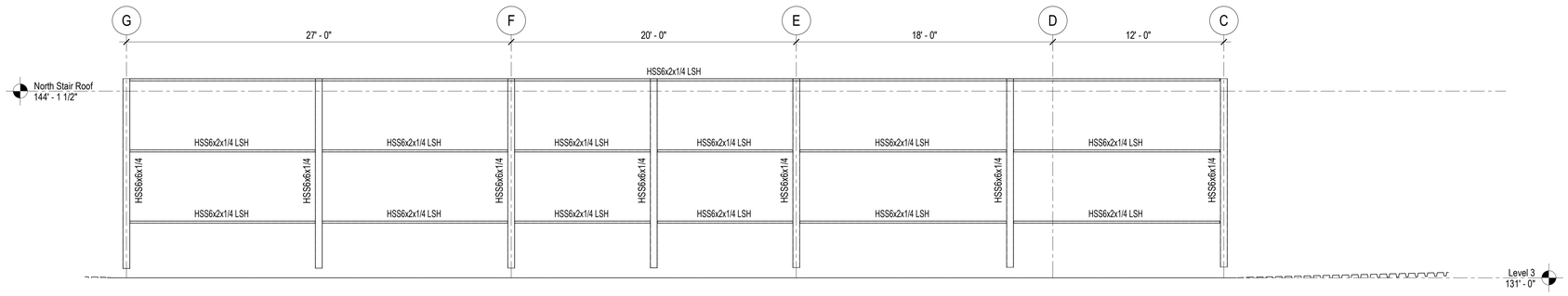

D1 / SF205 SCREENWALL ELEVATIONS

NO SCALE

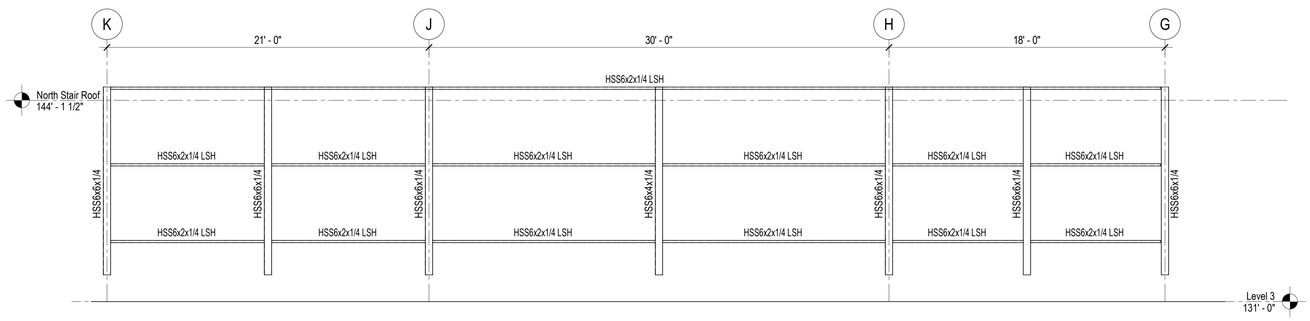

C1 / SF205 SCREENWALL ELEVATIONS

NO SCALE

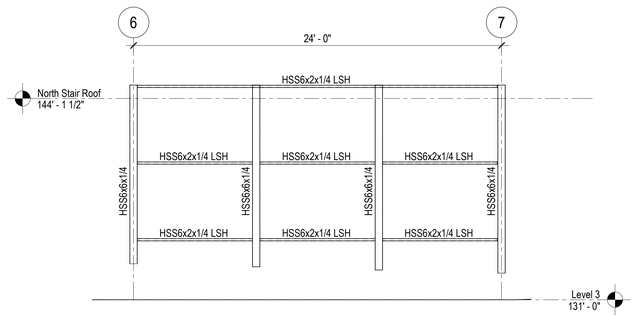

C2 / SF205 SCREENWALL ELEVATIONS

NO SCALE

HKS

ARCHITECT
HKS ARCHITECTS, INC.
90 SOUTH 400 WEST, #110
SALT LAKE CITY, UTAH 84101

CIVIL ENGINEER
GREAT BASIN ENGINEERING, INC
5746 SOUTH 1475 EAST
OGDEN, UTAH 84403

LANDSCAPE ARCHITECT
MGB+A STUDIO
145 WEST 200 SOUTH
SALT LAKE CITY, UTAH 84101

STRUCTURAL ENGINEER
REAVELEY ENGINEERS
250 EAST 200 SOUTH, SUITE 1000
SALT LAKE CITY, UTAH 84111

M/P/FP ENGINEER
RESOLUT GROUP
181 EAST 5600 SOUTH, SUITE 200
MURRAY, UTAH 84107

E/T ENGINEER
LYNK ENGINEERS
324 SOUTH STATE STREET, SUITE 400
SALT LAKE CITY, UTAH 84111

Intermountain Health

UTAH VALLEY SPORTS PERFORMANCE CENTER

PROJECT ADDRESS: WEST 880 NORTH 200 WEST PROVO, UTAH 84604

SEAL & SIGNATURE

KEY PLAN

REVISION

NO.	DESCRIPTION	DATE

HKS PROJECT NUMBER
27487.000

DATE
08/26/2026

ISSUE
DESIGN DEVELOPMENT

SHEET TITLE
SCREENWALL ELEVATIONS

SHEET NO.
SF205

© HKS, INC.

TITLE BLOCK VERSION: 20210930
MODEL: Autodesk Docs://27487.000_IH - UV Sports Performance Center 2025/S_IH-UV_Sports-Performance-Center_2025.rvt
PRINT DATE: 8/26/2026 5:19:58 PM TEMPLATE VERSION:

TITLE BLOCK VERSION: 20210930

PROJECT SPECIFIC INFORMATION

PROJECT NUMBER:	**#####**
SUBMITTAL NUMBER:	S-##
SUBMITTAL DATE:	MM/DD/YYYY
PROJECT NAME:	PROJECT NAME
LOCATION:	PROJECT LOCATION
CONNECTION TYPE:	SIDEPLATE PLUS
NUMBER OF BUILDINGS:	#
APPROX. TOTAL GROSS SQUARE FOOTAGE:	##,###
NUMBER OF STORIES:	#

eDATA:

a. THERE MAY BE eDATA AVAILABLE FOR YOUR PROJECT WHICH IS AVAILABLE FOR DOWNLOAD AT WWW.SIDEPLATE.COM. eDATA MAY INCLUDE:
   - eSTIMATE FILE IN EXCEL FORMAT FOR USE IN AFFIRMING SIDEPLATE CONNECTION MATERIAL QUANTITIES.
   - ComponentXML FILE FOR USE IN ASSISTING DETAILING EFFORTS.

b. ESTIMATED NUMBER OF SIDEPLATE JOINTS FOR THIS PROJECT = ###

c. ESTIMATED NUMBER OF SIDEPLATE JOINTS FOR THIS PROJECT THAT ARE **NOT** SUPPORTED BY eDATA = ###

d. MISCELLANEOUS DETAILS, TYPICALLY DESIGNATED BY M#, ARE NOT SUPPORTED.

INSTRUCTIONS TO STEEL FABRICATOR

1. SIDEPLATE LICENSE FEE:
   a. THE STEEL FABRICATOR'S BID PRICE FOR PROCUREMENT, FABRICATION AND ERECTION OF STRUCTURAL AND MISCELLANEOUS STEEL SHALL INCLUDE THE SIDEPLATE LICENSE FEE FOR THE PROJECT. EACH PROSPECTIVE STEEL FABRICATOR WHO BIDS THE PROJECT SHALL FORMALLY REQUEST THE SIDEPLATE LICENSE FEE BY ACCESSING THE SIDEPLATE WEBSITE (http://www.sideplate.com).
   b. UPON THE SUCCESSFUL STEEL FABRICATOR SIGNING A CONTRACT TO FABRICATE STRUCTURAL STEEL FOR THIS PROJECT, THE STEEL FABRICATOR SHALL SUBMIT A PURCHASE ORDER (PO) TO SIDEPLATE SYSTEMS, INC. FOR THE TOTAL AMOUNT OF THE SIDEPLATE LICENSE FEE AND SHALL INCLUDE SAID FEE IN ITS FIRST CONSTRUCTION DRAW.
   c. THE STEEL FABRICATOR SHALL MAKE PAYMENT OF THE SIDEPLATE LICENSE FEE DIRECTLY TO:

      SIDEPLATE SYSTEMS, INC.
      25909 PALA, SUITE 200
      MISSION VIEJO, CA 92691
      TEL: 949-238-8900

SUBMITTALS

1. IN ADDITION TO THE REQUIRED SUBMITTALS SPECIFIED BY THE BALANCE OF THE CONTRACT DOCUMENTS, THE FOLLOWING SUBMITTALS SHALL BE SENT TO SIDEPLATE SYSTEMS, INC. ELECTRONICALLY VIA THE STRUCTURAL ENGINEER OF RECORD FOR THEIR REVIEW AND DISPOSITION:
   a. QUALITY CONTROL PROGRAM (REQUIRED IF NOT AISC CERTIFIED)
   b. ONE ELECTRONIC COPY OF ALL STRUCTURAL STEEL DRAWINGS THAT EITHER DIRECTLY PERTAINS TO AND/OR AFFECTS THE SHOP FABRICATION OR FIELD ERECTION OF THE SIDEPLATE STEEL FRAME CONNECTION SYSTEM, INCLUDING THE INITIAL SUBMITTAL AND ALL CORRECTED RE-SUBMITTALS OF AFFECTED DRAWINGS. SIDEPLATE SYSTEMS, INC. SHALL BE GIVEN, AS A MINIMUM, THE SAME SPECIFIED REVIEW TIME (NOT LESS THAN SEVEN BUSINESS DAYS) AS THE ENGINEER OF RECORD.
   c. PROCEDURE QUALIFICATION RECORD (PQR), OR WELDING PROCEDURE SPECIFICATIONS (WPS) AND CURRENT CERTIFICATE OF CONFORMANCE BY THE WIRE MANUFACTURER.
2. SENT BY SIDEPLATE:
   a. INTELLECTUAL PROPERTY RIGHTS NOTICE LABEL.
   b. USPTO PATENT LABEL STICKERS, SEE INTELLECTUAL PROPERTY SECTION FOR PLACEMENT.

MEETINGS

1. PRE-DETAILING MEETING
   a. PRIOR TO THE START OF DETAILING OF THE SHOP DRAWINGS, THE FABRICATION CONTRACTOR SHALL FORMALLY REQUEST A PRE-DETAILING MEETING FROM SIDEPLATE SYSTEMS, INC. THIS MEETING IS TYPICALLY A WEBINAR TO DISCUSS BEST PRACTICES FOR THE DETAILING OF THE SIDEPLATE CONNECTIONS, AND TO CREATE A PROACTIVE FORUM TO ANSWER ANY QUESTIONS.
2. PRE-FABRICATION MEETING
   a. PRIOR TO THE START OF FABRICATION, THE FABRICATION CONTRACTOR SHALL FORMALLY REQUEST A PRE-FABRICATION MEETING FROM SIDEPLATE SYSTEMS, INC. THIS MEETING IS TYPICALLY A WEBINAR TO DISCUSS BEST PRACTICES FOR THE FABRICATION OF THE SIDEPLATE CONNECTIONS, AND TO CREATE A PROACTIVE FORUM TO ANSWER ANY QUESTIONS.
3. PRE-ERECTION MEETING
   a. PRIOR TO THE START OF STEEL ERECTION, THE ERECTION CONTRACTOR SHALL FORMALLY REQUEST A PRE-ERECTION MEETING FROM SIDEPLATE SYSTEMS, INC. THIS MEETING IS TYPICALLY A WEBINAR TO DISCUSS BEST PRACTICES FOR FIELD ERECTION OF THE SIDEPLATE BEAMS AND COLUMNS, AND TO CREATE A PROACTIVE FORUM TO ANSWER ANY QUESTIONS.

GENERAL

1. THE GOVERNING CODES SHALL CONSIST OF ANSI/AWS D1.1-2015 (AWS D1.1), ANSI/AWS D1.8-2016, ANSI/AISC 358-16 (INCLUDING SUPPLEMENT NO. 2), AISC CODE OF STANDARD PRACTICE FOR STEEL BUILDINGS AND BRIDGES (JUNE 15, 2016), 2016 RCSC SPECIFICATIONS FOR STRUCTURAL JOINTS USING HIGH-STRENGTH BOLTS, AND ALL APPLICABLE BUILDING AND JURISDICTIONAL CODES AND PROJECT STANDARDS SPECIFIED IN THE PROJECT SPECIFICATION STRUCTURAL STEEL SECTION. WHERE THE REQUIREMENTS DIFFER BETWEEN SIDEPLATE CONNECTION NOTES, THE GENERAL STRUCTURAL NOTES, AND THE GOVERNING CODES, THE MORE STRINGENT SECTION CRITERIA SHALL CONTROL.
2. ALPHA AND NUMERIC DESIGNATORS {X} & (#) USED HEREIN TO SIMPLIFY THE IDENTIFICATION OF PLATES, ANGLES, AND WELDS ARE DEFINED BELOW:

{A}	SIDE PLATE FOR UNIAXIAL CONNECTIONS
{B}	BEAM FLANGE COVER PLATE, AS REQUIRED
{C}	VERTICAL SHEAR PLATE OR FLAT BAR WELDED TO BEAM WEB, AS REQUIRED
{D}	HORIZONTAL SHEAR PLATE OR FLAT BAR WELDED TO COLUMN WEB, AS REQUIRED
{E}	VERTICAL ANGLE WELDED TO THE VERTICAL SHEAR PLATE (C), AS REQUIRED
{F}	VERTICAL SHEAR ELEMENT (VSE) WHICH CONSISTS OF PLATE (C) AND ANGLE (E) MATERIAL, AS REQUIRED
{G}	LONGITUDINAL ANGLE WELDED TO THE OUTSIDE FACE OF SIDE PLATE {A}, AS REQUIRED
{H}	LONGITUDINAL ANGLE WELDED TO THE BOTTOM BEAM FLANGE (OR TOP BEAM FLANGE AS REQUIRED)
{T}	HORIZONTAL PLATE WELDED TO THE OUTSIDE FACE OF SIDE PLATE {A}, AS REQUIRED
{1}	FILLET WELD CONNECTING SIDE PLATE {A} TO HORIZONTAL SHEAR PLATE (D) OR COLUMN
{2}	FILLET (AND/OR FLARE BEVEL) WELD CONNECTING INSIDE FACE OF SIDE PLATE {A} TO COLUMN [DEMAND CRITICAL]
{3}	FILLET WELD CONNECTING HORIZONTAL SHEAR PLATE (D) TO COLUMN, AS REQUIRED
{4}	FILLET WELD TO CONSTRUCT VSE {F} AND TO CONNECT IT TO THE WEB OF THE BEAM, AS REQUIRED
{5}	FILLET (AND/OR PJP) WELD CONNECTING BEAM FLANGE TIPS TO COVER PLATE (B) AND/OR LONGITUDINAL ANGLE (H), AS REQUIRED [DEMAND CRITICAL]
{5a}	FILLET WELD CONNECTING OUTSIDE FACE OF BEAM FLANGE TO COVER PLATE (B) AND/OR LONGITUDINAL ANGLE (H), AS REQUIRED [DEMAND CRITICAL]
((5p))	PJP WELD CONNECTING ANGLE (H) TO BEVELED BEAM FLANGE [DEMAND CRITICAL]
{8}	FILLET (AND/OR PJP) WELD CONNECTING LONGITUDINAL ANGLE (G) (AND/OR PLATE (T)) TO SIDE PLATE {A}, AS REQUIRED [DEMAND CRITICAL]
((8p))	PJP WELD CONNECTING PLATE (T) TO SIDE PLATE {A}, AS REQUIRED [DEMAND CRITICAL]
{9}	FILLET WELD CONNECTING SIDE PLATE {A} TO COLUMN FACE, WRAPPED AROUND THREE SIDES OF SIDE PLATE {A} [DEMAND CRITICAL]
{10}	FILLET WELD TO CONSTRUCT SIDE PLATE SLOTTED INTERLOCK ASSEMBLY [DEMAND CRITICAL]
{10p}	PJP WELD TO CONSTRUCT SIDE PLATE SLOTTED INTERLOCK ASSEMBLY [DEMAND CRITICAL]
{10r}	REINFORCING FILLET WELD TO CONSTRUCT SIDE PLATE SLOTTED INTERLOCK ASSEMBLY [DEMAND CRITICAL]
{13}	FILLET WELD CONNECTING BUILT UP ANGLE (H) PLATES TOGETHER, AS REQUIRED [DEMAND CRITICAL]
((13p))	PJP WELD CONNECTING BUILT UP ANGLE (H) PLATES TOGETHER, AS REQUIRED [DEMAND CRITICAL]

3. ALPHA DESIGNATORS, USED HEREIN TO SIMPLIFY THE IDENTIFICATION OF DIMENSIONS OF THE SIDEPLATE CONNECTIONS, ARE DEFINED BELOW:

GAP	PHYSICAL SEPARATION BETWEEN THE END OF THE MOMENT FRAME BEAM AND THE ADJOINING FACE OF THE COLUMN FLANGE (AKA COLUMN/BEAM SEPARATION)
A	EXTENSION OF SIDE PLATE {A} FROM THE FACE OF THE COLUMN
B	DEPTH OF SIDE PLATE {A}
C	LENGTH OF COVER PLATE {B} AND/OR LONGITUDINAL ANGLE {H}
D	LENGTH OF SLOT FROM THE TOE OF THE RADIUS IN THE COVER PLATE {B}, AS REQUIRED
E	EDGE DISTANCE OF BOLT HOLES IN COVER PLATE {B}, AS REQUIRED
F	DISTANCE FROM END OF SIDE PLATE {A} TO A CJP WELDED SPLICE IN THE FLANGES AND WEB OF THE MOMENT FRAME BEAM, AS REQUIRED
G	GAGE DISTANCE TO CENTERLINE OF BOLT HOLES IN ANGLES {G} AND {H}, AND PLATE {T}, AS REQUIRED
H	ADDED DIMENSION TO COLUMN FLANGE WIDTH TO DEFINE TOTAL COVER PLATE {B} WIDTH
J	DISTANCE FROM END OF THE BEAM TO CENTERLINE OF VERTICAL BOLT HOLES IN VSE {F}, AS REQUIRED
K	CUT DIMENSION ON ANGLE {H}
L	DISTANCE FROM CENTERLINE OF HORIZONTAL BOLT HOLES IN BOTTOM ANGLE {H} TO BOTTOM MOST BOLT HOLE IN VSE {F}
R	RADIUS OF SLOT DIMENSION IN COVER PLATE {B}
S	HORIZONTAL SPACING BETWEEN BOLT HOLES
Y	ADDED DIMENSION TO COLUMN FLANGE WIDTH FOR ALLOWABLE SPREAD OF SIDE PLATES {A}

MATERIAL

1. PLATE, FLAT BAR, AND ANGLE MATERIAL:
   a. ALL PLATE MATERIAL SHALL BE ASTM A572, GRADE 50.
   b. ANGLE AND BAR MATERIAL SHALL HAVE A HIGH STRENGTH STEEL SPECIFICATION AND SHALL HAVE A MINIMUM YIELD STRENGTH (F_y) OF 50 KSI.
   c. ALL PLATE MATERIAL 2 INCHES THICK AND GREATER SHALL MEET THE FOLLOWING ADDITIONAL REQUIREMENTS:
      - CHARPY V-NOTCH (CVN) TOUGHNESS SHALL BE CONDUCTED IN ACCORDANCE WITH THE PROVISIONS OF ASTM A673, FREQUENCY P. A MINIMUM CVN TOUGHNESS OF 20 FT-LB AT A TEMPERATURE OF 70°F, IN ACCORDANCE WITH ASTM A6, SUPPLEMENTARY REQUIREMENT S5, SHALL BE DOCUMENTED IN THE CERTIFIED MILL TEST REPORT (CMTR). IF THE CMTR DOES NOT DOCUMENT THE MINIMUM CVN VALUES, A COUPON SHALL BE REMOVED FROM THE END OF EACH PIECE OF PLATE TO BE TESTED. THE LENGTH OF COUPON SHALL BE MACHINED FROM EACH COUPON IN ACCORDANCE WITH THE AISC SPECIFICATION FOR STRUCTURAL STEEL BUILDINGS, SECTION A3-1d, BUILT-UP HEAVY SHAPES.
2. WELD FILLER METAL
   a. THE WELD FILLER METAL AND ASSOCIATED WELDING PROCESS FOR ALL FILLET WELDS SHALL MEET THE REQUIREMENTS OF AWS D1.1 AND D1.8 SECTION 6.1 AND SHALL BE ANY OF THE FOLLOWING:
      - E70T-6, E71T-8, OR E70TG-K2 FOR FCAW
      - E7XT-9 FOR FLUX CORED ARC WELDING (FCAW) WITH GAS SHIELDING
      - F7A2-EXXX FOR SUBMERGED ARC WELDING (SAW)
      - E7018 STICK ELECTRODE FOR SHIELDED METAL ARC WELDING (SMAW)
      - ER70S-X, E70C-XM, OR E70C-XC FOR GMAW (EXCEPT SHORT CIRCUIT TRANSFER)
   b. THE WELD FILLER METAL USED FOR FILLET WELDS TO CONSTRUCT THE SIDEPLATE CONNECTION SYSTEM PRESENTED HEREIN SHALL DEMONSTRATE AN ENERGY EQUIVALENT TO A MINIMUM CVN TOUGHNESS OF 20 FT-LB IMPACT STRENGTH AT A TEMPERATURE OF 0°F AND 40 FT-LB IMPACT STRENGTH AT 70°F AS DETERMINED BY AWS CLASSIFICATION TEST METHODS OR MANUFACTURER CERTIFICATION.
   c. ALL WELD FILLER METAL SHALL SATISFY A MAXIMUM DIFFUSIBLE HYDROGEN CONTENT REQUIREMENT PER AWS D1.1 AND D1.8 SECTION 6.1, OF 16 MILLILITERS OF HYDROGEN PER 100 GRAMS OF WELD METAL (H16) OR LESS.
   d. REFER TO AWS D1.8 ANNEX B FOR REQUIREMENTS WHEN MIXING FCAW-S WITH OTHER WELD PROCESSES.
3. HIGH STRENGTH BOLTS/FASTENERS:
   a. BOLTS SHALL BE TYPE 1 OR TYPE 3 AND SHALL BE ASTM F3125, GRADE A490-X OR GRADE F2280-X, OR F3148 FIXED SPLINE BOLT ASSEMBLIES. THE BOLT HEAD SHALL BE DISTINCTIVELY MARKED WITH A MINIMUM MARKING OF A490, A490TC, OR 144 RESPECTIVELY. AN ALTERNATIVE DESIGN THAT MEETS THE REQUIREMENTS OF RCSC SECTION 2.8 MAY BE USED, WITH THE WRITTEN APPROVAL FROM SIDEPLATE SYSTEMS, INC.
   b. FOR BOLTS UP TO 1 1/4 INCH DIAMETER WASHERS SHALL BE ORDINARY THICKNESS AND ASTM F436 TYPE 1 OR TYPE 3. 1 1/2 INCH DIAMETER BOLTS SHALL REQUIRE 5/16 INCH THICK WASHER.
   c. NUTS SHALL BE ASTM A563 GRADE DH OR DH3.
   d. THE BOLT ASSEMBLY SHALL BE COVERED IN A LIGHT PROTECTIVE OIL. F2280 AND F3148 ASSEMBLIES SHALL ONLY BE LUBRICATED BY THE SUPPLIER.
   e. THE MILL TEST REPORT (MTR) MUST HAVE DOCUMENTED LOT TRACEABILITY, STATEMENT OF DIMENSIONAL RESULTS, FULL CHEMICAL AND MECHANICAL TEST RESULTS TO THE SPECIFICATIONS ABOVE.
   f. THE USE OF FINGER SHIMS ARE ACCEPTABLE PER BOLTING SECTION 8.
4. ROLLED SHAPES:
   a. ALL ROLLED SHAPES USED FOR COLUMNS AND BEAMS IN CONSTRUCTING SIDEPLATE MOMENT FRAMES SHALL BE ASTM A992 GRADE 50 UNO.
   b. FOR EACH DIFFERENT SIZE OF STEEL FRAME COLUMNS AND BEAMS IDENTIFIED IN THE CONTRACT DOCUMENTS AS PART OF THE SFRS INVOLVING ASTM A6 HOT-ROLLED SHAPES WITH FLANGES 1/2 INCHES THICK OR THICKER, CHARPY V-NOTCH (CVN) TOUGHNESS SHALL BE CONDUCTED IN ACCORDANCE WITH THE PROVISIONS OF ASTM A673, FREQUENCY H. A MINIMUM CVN TOUGHNESS OF 20 FT-LB AT A TEMPERATURE OF 70°F, IN ACCORDANCE WITH ASTM A6, SUPPLEMENTARY REQUIREMENT S30, SHALL BE DOCUMENTED IN THE CERTIFIED MILL TEST REPORT (CMTR). IF THE CMTR DOES NOT DOCUMENT THE MINIMUM CVN VALUES, A COUPON SHALL BE REMOVED FROM THE END OF EACH MEMBER SHAPE SAMPLED. THE LENGTH OF COUPON SHALL BE ORIENTED PARALLEL TO THE LONGITUDINAL AXIS OF THE MEMBER. A TEST SPECIMEN SHALL BE MACHINED FROM EACH COUPON, IN ACCORDANCE WITH THE AISC SPECIFICATION FOR STRUCTURAL STEEL BUILDINGS, SECTION A3-1c, ROLLED HEAVY SHAPES. THE LONGITUDINAL AXIS OF THE TEST SPECIMEN SHALL BE LOCATED AS NEAR AS PRACTICABLE TO A POINT MIDWAY BETWEEN THE INNER FLANGE SURFACE AND THE CENTER OF FLANGE THICKNESS, AT THE INTERSECTION OF THE WEB MID-THICKNESS.
5. WELDED BUILT-UP SHAPES:
   a. FOR EACH DIFFERENT SIZE OF STEEL FRAME COLUMNS AND BEAMS IDENTIFIED IN THE CONTRACT DOCUMENTS AS PART OF THE SFRS INVOLVING PLATE 2 INCHES THICK OR THICKER USED TO CONSTRUCT WELDED BUILT-UP SECTIONS SHALL FOLLOW PLATE MATERIAL SPECIFICATIONS OUTLINED IN SECTION 1.
6. HSS TUBE SHAPES:
   a. ALL HSS SHAPES USED FOR BEAMS IN CONSTRUCTING SIDEPLATE MOMENT FRAMES SHALL, AS A MINIMUM, BE ASTM A500 GRADE B OR GRADE C OR ASTM A1085.
   b. ALL HSS SHAPES USED FOR COLUMNS IN CONSTRUCTING SIDEPLATE MOMENT FRAMES SHALL BE ASTM A500 GRADE C OR ASTM A1085.

PREPARATION

1. THE STEEL FABRICATION AND ERECTION SUBCONTRACTORS SHALL EMPLOY A DISTORTION CONTROL PROGRAM PRIOR TO THE START OF SIDEPLATE MOMENT FRAME FABRICATION. THE DISTORTION CONTROL PROGRAM SHALL BE IN ACCORDANCE WITH THE PROVISIONS OF AWS D1.1 SECTION 5.20 AND 5.21 TO ENSURE THAT THE FOLLOWING ARE MAINTAINED:
   - DIMENSIONAL ACCURACY
   - FRAMING AND ALIGNMENT TOLERANCES
   - COMPLIANCE WITH AISC CODE OF STANDARD PRACTICE FOR STEEL BUILDINGS AND BRIDGES, SECTION 7.0, ERECTION PROVISIONS
   - CONTROL OF DISTORTION AND WELD SHRINKAGE
2. BASE METAL SURFACE PREPARATION: SURFACES ON WHICH WELD METAL IS TO BE DEPOSITED, INCLUDING BUT NOT LIMITED TO COLUMN FLANGE TIPS (I.E., COLUMN FLANGE-TO-SIDE PLATE (A) ATTACHMENT), BEAM FLANGE TIPS (I.E., BEAM FLANGE-TO-COVER PLATE (B) ATTACHMENT) AND THERMAL CUT EDGES (E.G., LONGITUDINAL EDGES OF COVER PLATE (B).), SHALL BE SMOOTH, UNIFORM, AND FREE FROM LOOSE OR THICK SCALE, SLAG, RUST, MOISTURE, GREASE AND OTHER FOREIGN MATERIAL THAT WOULD PREVENT PROPER WELDING.
3. THERMAL CUTTING:
   a. THE ROUGHNESS OF ALL THERMAL-CUT SURFACES SHALL BE NO GREATER THAN AN ANSI SURFACE ROUGHNESS VALUE OF 1000 MICRO-INCHES; CUT ROUGHNESS EXCEEDING THIS VALUE AND NOTCHES OR GOUGES NOT MORE THAN 3/16 INCH DEEP SHALL BE REMOVED BY MACHINING OR GRINDING. NOTCHES OR GOUGES DEEPER THAN 3/16 INCH SHALL BE REPAIRED PER AWS.
   b. FLAME CUT SURFACES SHALL BE FREE OF GLOBULES AND LOOSE SLAG. THE THERMAL CUTTING EQUIPMENT SHALL BE ADJUSTED AND MANIPULATED SO AS TO AVOID CUTTING BEYOND (INSIDE) THE PRESCRIBED LINES.
   c. THERMAL CUTTING PROCESSES SHALL BE LIMITED TO PLASMA ARC-CUTTING OR OXYFUEL GAS PROCESSES.
4. WEB/FLANGE FILLET AREA:
   a. UNLESS NOTED OTHERWISE, VERTICAL SHEAR PLATES (C) (AS REQUIRED) AND HORIZONTAL SHEAR PLATES (D) (AS REQUIRED) SHALL HAVE THEIR INSIDE CORNERS CLIPPED PER AWS D1.8 CLAUSE 4 TO PREVENT WELDING IN THE K-AREA BETWEEN WEB AND FLANGE WHEN THE COLUMN IS DEEPER THAN W16x. THESE CLIPS SHALL START AND STOP A DISTANCE OF 1 1/2 INCHES FROM THE TANGENT OF THE FLANGE TO THE WEB FILLET (I.E., THE AISC 'K' DIMENSION). THE DIMENSIONS OF THE CLIPPED CORNER SHALL BE DETAILED ON THE SHOP DRAWINGS.
   b. WELD (3) RETURNS ON THE INSIDE FACE OF THE COLUMN FLANGES (AS OCCURS). IN NO CASE SHALL A WELD TIE-IN OF WELD (3) BE ALLOWED ACROSS THE CLIPPED CORNER OF THE HORIZONTAL SHEAR PLATES (D) AT THE K-AREA BETWEEN WEB AND FLANGE.
5. ANY HOLE MAKING METHODS ALLOWED BY AISC SPECIFICATIONS ARE ALLOWED WITH THE EXCEPTION THAT WHEN USING A THERMAL CUTTING PROCESS, IT IS NOT PERMITTED FOR PLATES THICKER THAN 2 INCHES (50 MM).

WELDING

1. WELDER QUALIFICATION: THE PERFORMANCE OF ALL WELDERS, WELDING OPERATORS AND TACK WELDERS SHALL BE QUALIFIED IN CONFORMANCE WITH AWS D1.1, SECTION 4, PART C TO DEMONSTRATE ABILITY TO PRODUCE SOUND WELDS.
2. WELDING PROCEDURE SPECIFICATIONS (WPS):
   a. THE APPROPRIATE STEEL SUB-CONTRACTOR SHALL PREPARE A SPECIFIC WRITTEN WPS FOR EVERY DIFFERENT WELDING APPLICATION. DIFFERENT WELDING APPLICATIONS INCLUDE, BUT ARE NOT LIMITED TO, THE JOINT DETAILS AND TOLERANCES, PREHEAT AND INTERPASS TEMPERATURE, SINGLE OR MULTIPLE STRINGER PASSES, WELDING CURRENT, POLARITY, ALLOWABLE AMPERAGE RANGES, ALLOWABLE VOLTAGE RANGES, ALLOWABLE TRAVEL SPEED RANGES, ELECTRODE EXTENSION, ROOT TREATMENT, WELDING PROCESS, ELECTRODE MANUFACTURER, FILLER METAL TRADE NAME FOR THE ELECTRODE TYPE SELECTED, AND OTHER ESSENTIAL VARIABLES AS DEFINED IN AWS D1.1 REQUIRED TO COMPLETE THE FABRICATION AND ERECTION OF THE SPECIFIED SIDEPLATE CONNECTIONS. AMPERAGE, VOLTAGE, TRAVEL SPEED AND ELECTRODE EXTENSION SHALL BE WITHIN THE FILLER METAL MANUFACTURER'S RECOMMENDATIONS.
   b. EACH WPS PREPARED SHALL BE BASED ON AND REFERENCED TO A CURRENT CERTIFICATE OF CONFORMANCE PROVIDED BY THE WIRE MANUFACTURER AND SHALL BE USED AS A SUPPORTING PQR PROVIDING FULL COMPLIANCE WITH EVERY SINGLE CONDITION OF PREQUALIFICATION FOUND IN AWS D1.1 SECTION 3 AND AWS D1.8 HIGH AND LOW HEAT INPUT FOR PREQUALIFIED FILLET AND CJP WELDS. THE SELECTION OF THIS OPTION BY THE STEEL FABRICATION/ERECTION SUBCONTRACTOR IS PREDICATED ON ITS ACKNOWLEDGEMENT THAT ITS CERTIFIED WELDERS ARE EXPERIENCED AND CONFIDENT IN THE USE AND SETTINGS SPECIFIED IN THE CERTIFICATE OF CONFORMANCE WITH THE ALLOWABLE TOLERANCES FOR ESSENTIAL VARIABLES FOUND IN TABLE 3.7 OF AWS D1.1. PREVIOUS WPS QUALIFICATION PERFORMED BY THE STEEL FABRICATION/ERECTION SUBCONTRACTOR THAT COMPLIES WITH THE PROVISIONS HEREIN MAY SATISFY THIS REQUIREMENT. EACH WPS SHALL BE SUBMITTED TO THE ENGINEER OF RECORD, AND TO SIDEPLATE SYSTEMS, INC. FOR REVIEW AND DISPOSITION PRIOR TO STARTING THE WORK.
   c. THE APPROVED WPS FOR EACH APPLICABLE PRODUCTION WELD SHALL BE CLEARLY DISPLAYED TO PROVIDE READY ACCESS BY THE ASSIGNED WELDERS, WELDING SUPERVISORS AND INSPECTORS.
   d. IN LIEU OF THE ABOVE PROCEDURE, THE STEEL FABRICATOR MAY CHOOSE TO QUALIFY A WPS BASED ON A PROCEDURE QUALIFICATION RECORD (PQR), WHICH SHALL BE PROVIDED WITH THE WPS SUBMITTAL. THE PQR SHALL CONFORM TO THE REQUIREMENTS OF AWS D1.1, SECTION 4.1 AND EMPLOY THE PROPER ACCEPTANCE CRITERIA.
3. TACK WELDS:
   a. TACK WELDS SHALL BE PLACED WHERE THEY WILL BE INCORPORATED INTO A FINAL WELD AND SHALL BE SUBJECT TO THE SAME QUALITY REQUIREMENTS AS THE FINAL WELDS, INCLUDING POSITION, PREHEAT AND UNDERCUT, IN ACCORDANCE WITH AWS D1.1. THESE QUALITY REQUIREMENTS SHALL APPLY EQUALLY TO TACK WELDING OF ANY OTHER CONSTRUCTION AIDS.
4. PREHEAT AND INTERPASS TEMPERATURE REQUIREMENTS:
   a. THE MINIMUM PREHEAT AND INTERPASS TEMPERATURES FOR A GIVEN THICKNESS OF BASE METAL TO BE WELDED SHALL BE IN ACCORDANCE WITH AWS D1.1 TABLE 3.3.
   b. IN NO CASE, REGARDLESS OF THE WELDING PROCESS, SHALL THE PREHEAT TEMPERATURE BE LESS THAN THAT REQUIRED TO DRIVE OFF ANY SURFACE MOISTURE OR CONDENSATION WHICH MAY BE PRESENT ON THE STEEL ELEMENTS TO BE WELDED.
   c. MAXIMUM INTERPASS TEMPERATURE SHALL NOT EXCEED 550°F, MEASURED AT A DISTANCE NOT EXCEEDING THREE INCHES FROM THE START OF THE WELD PASS. WELDING OPERATORS AND INSPECTORS SHALL UTILIZE TEMPERATURE MEASURING DEVICES.
5. ALL SLAG SHALL BE REMOVED AFTER EACH WELD PASS AND THE WELD AND THE ADJACENT BASE METAL SHALL BE CLEANED BEFORE WELDING OVER. INTERMEDIATE WELD DEPOSITED WELD METAL. THIS REQUIREMENT SHALL APPLY NOT ONLY TO SUCCESSIVE LAYERS BUT ALSO TO SUCCESSIVE BEADS AND TO THE CRATER AREA WHEN WELDING IS RESUMED AFTER ANY INTERRUPTION, IN ACCORDANCE WITH AWS D1.1 SECTION 5.29.1.
6. PEENING SHALL NOT BE ALLOWED.
7. WELD RUN-OFF TABS SHALL NOT BE USED FOR FILLET WELDS (EXCEPT WHEN REQUIRED ON INTERLOCKING SLOTTED SIDE PLATES).
8. WELD END TERMINATIONS FOR RECESSED PLATE (D) OPTION ONLY WHERE WELD (3) IS REQUIRED ON BOTH WEB AND FLANGES:
   a. IN ORDER TO PREVENT TIE-IN BETWEEN THE ENDS OF WELD (3) CLOSEST TO THE INSIDE FACE OF SIDE PLATE (A) AND WELD (1) THE ENDS OF WELD (3) SHALL BE HELD BACK FROM THE PLANE TIP OF COLUMN BY A DISTANCE EQUAL TO WELD (3) PLUS 1/8 INCH. IN NO CASE SHALL A WELD TIE-IN BETWEEN THE ENDS OF WELD (1) AND THE ENDS OF WELD (3) CLOSEST TO THE INSIDE FACE OF SIDE PLATE (A) BE ALLOWED. FABRICATION PRIORITY IS GIVEN HEREIN TO WELDING FILLET WELD (3) ALONG ITS FULL DISTANCE.
9. ARC STRIKES WITHIN THE SIDEPLATE PROTECTED ZONE ON BOTH THE INTERIOR AND EXTERIOR FACES OF SIDE PLATES (A), WITHIN THE TOP AND BOTTOM 6 INCHES OF PLATE HEIGHT SHALL BE AVOIDED. IF THEY DO OCCUR, THEY SHALL BE REMOVED BY GRINDING AND SHALL HAVE BASE METAL REPAIRED PER AWS D1.8 SECTION 6.18, WITH NON-DESTRUCTIVE TESTING AS NECESSARY.

BOLTING

1. BOLTS/FASTENERS SHALL BE INSTALLED TO PRETENSIONED CONDITION USING ONE OF THE METHODS PRESCRIBED HERE: TURN-OF-NUT (A490), CALIBRATED WRENCH (A490), TWIST-OFF-TYPE TENSION-CONTROL BOLT (F2280), TORQUE AND ANGLE METHOD (F3148), OR WHEN HEAVY HEX BOLTS ARE REQUIRED DIRECT TENSION INDICATORS (DTI) (ASTM F959). FOR TURN-OF-NUT THE THREAD AND NUT SHOULD BOTH BE MARKED TO MAKE SURE THE REQUIRED TURN IS ACHIEVED.
2. FOR ALL PRETENSIONING METHODOLOGIES, ALL FASTENER ASSEMBLIES WITHIN THE JOINT SHALL FIRST BE BROUGHT TO A SNUG TIGHT CONDITION, FOLLOWED BY A SYSTEMATIC PRETENSIONING PROCESS. PRETENSIONING SHALL BEGIN AT THE MOST RIGID PART OF THE JOINT AND CONTINUE IN A MANNER THAT WILL MINIMIZE THE RELAXATION OF PREVIOUSLY PRETENSIONED FASTENERS, UNTIL THE CONNECTED PLIES ARE IN AS FIRM CONTACT AS POSSIBLE. IN ADDITION:
   a. FOR TURN-OF-NUT METHOD, AFTER SNUGGING THE JOINT USING AT LEAST A FEW IMPACTS OF A WRENCH OR THE FULL EFFORT OF AN IRON WORKER, ROUTINE MARKING OR MATCH-MARKING SHALL BE USED TO VERIFY RELATIVE BOLT AND NUT ROTATION TO RCSC TABLE 8.2 FOR BOLT LENGTHS OVER 4D UP TO 8D, THE BOLT OR NUT SHALL BE ROTATED 180 DEGREES (1/2 TURN). FOR BOLT LENGTHS OVER 8D UP TO 12D, THE BOLT OR NUT SHALL BE ROTATED 240 DEGREES (2/3 TURN). FOR BOLT LENGTHS OVER 12D, THE REQUIRED ROTATION SHALL BE DETERMINED USING A BOLT TENSION MEASUREMENT DEVICE.
   b. FOR CALIBRATED WRENCH METHOD, THE WRENCH AND BOLT ASSEMBLY LOT SHALL BE TESTED IN COMBINATION DAILY. IF NECESSARY, THE WRENCH SHALL BE CALIBRATED FOR PROPER OUTPUT PRIOR TO USE. THE INSTALLATION TORQUE NEED NOT PRODUCE A RELATIVE ROTATION EQUAL TO OR GREATER THAN THAT SPECIFIED BY THE TURN-OF-NUT METHOD.
   c. FOR TWIST-OFF-TYPE TENSION-CONTROL BOLT METHOD, FINAL TENSIONING SHALL BE DONE IN A CONTINUOUS OPERATION UNTIL THE TIP TWISTS OFF. ANY BOLT ASSEMBLIES WHICH HAD THE TIP TWIST OFF DURING THE SNUGGING OPERATION SHALL BE REMOVED AND REPLACED.
   d. FOR COMBINED METHOD (ASTM F3148), AFTER SNUGGING THE JOINT USING THE APPROPRIATE INSTALLATION TOOL, ROUTINE MONITORING OR MATCH MARKING SHALL BE USED TO VERIFY RELATIVE BOLT AND NUT ROTATION. FOR BOLT LENGTHS UP TO 4D, THE NUT SHALL BE ROTATED 90 DEGREES (1/4 TURN). FOR BOLT LENGTHS OVER 4D UP TO 8D, THE NUT SHALL BE ROTATED 120 DEGREES (1/3 TURN). FOR BOLT LENGTHS OVER 8D THE MANUFACTURER SHALL PROVIDE APPROPRIATE INSTALLATION REQUIREMENTS.
3. REUSE OF A490, F2280, AND F3148 BOLT ASSEMBLIES SHALL NOT BE ALLOWED. TOUCHING UP OR RE-TIGHTENING BOLTS THAT MAY HAVE BEEN LOOSENED BY THE INSTALLATION OF ADJACENT BOLTS SHALL NOT BE CONSIDERED TO BE A REUSE.
4. ALL BOLT HOLES SHALL BE ALIGNED TO PERMIT INSERTION OF THE BOLTS WITHOUT UNDUE DAMAGE TO THE THREADS.
5. THE BOLT LENGTH USED SHALL BE SUCH THAT THE BOLT THREAD EXTENDS BEYOND OR IS AT LEAST FLUSH WITH THE OUTER FACE OF THE NUT WHEN PROPERLY INSTALLED.
6. FASTENER COMPONENTS SHALL BE PROTECTED FROM DIRT AND MOISTURE IN CLOSED CONTAINERS AT THE SITE OF INSTALLATION.
7. THE BOLT SHANK SHALL NOT EXTEND BEYOND THE CONNECTED PLIES. USE WASHER

INTELLECTUAL PROPERTY RIGHTS NOTICE
The SIDEPLATE® steel frame connection system is covered by one or more of U.S. Pat. Nos. 6,138,427; 6,516,583; 6,591,573; 7,178,296; 8,122,671; 8,122,672; 8,146,322; 8,176,706; 8,205,408; and 9,091,065 and foreign counterparts. Other U.S. and foreign applications pending.

SIDEPLATE® is a registered trademark of MiTek Holdings, Inc., an affiliate of SidePlate Systems, Inc.

Copyright © 2026 SidePlate Systems, Inc. All rights reserved. Without limitation, this drawing and the information hereon may be used only following payment of a license fee to SidePlate Systems, Inc. and for the design, construction, operation, repair, maintenance, restoration or demolition of the building(s) specifically identified.
v17.32.08
2bar BOLTED

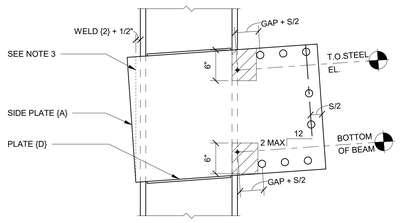

FRONT ELEVATION

NOTE(S):
1. FOR BEAM SLOPES GREATER THAN 2 INCHES PER FOOT, CONTACT SIDEPLATE SYSTEMS, INC.
2. COORDINATE PLATES, ANGLES, AND DIMENSIONS WITH RESPECT TO THE SLOPE OF THE CONNECTION.
3. AT CONTRACTOR'S DISCRETION, SIDE PLATE {A} MAY BE CUT AS SHOWN.

4 SLOPED UP CONNECTION
N.T.S.

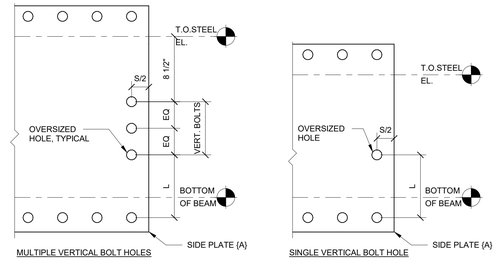

NOTE(S):
1. SEE COLUMN SCHEDULE FOR BOLT QUANTITY.

3 SIDE PLATE {A} VSE BOLT HOLE DETAIL (AS APPLICABLE)
N.T.S.

NOTE(S):
1. FOR VERTICAL BOLT HOLE INFORMATION SEE DETAIL 3 / SF212
2. AS APPLICABLE, FOR MISCELLANEOUS DETAILS INDICATED BY IDS "M#", REFER TO SIDEPLATE MISCELLANEOUS DETAILS SHEET.

2 A TYPE NARROW COLUMN CONNECTION SCHEDULE
N.T.S.

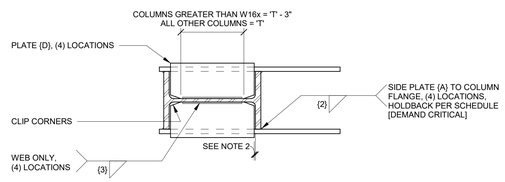

PLAN VIEW

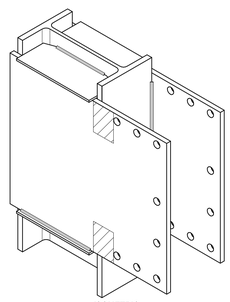

ISOMETRIC

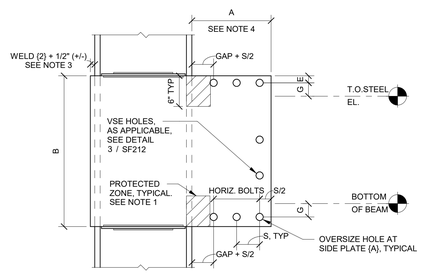

FRONT ELEVATION

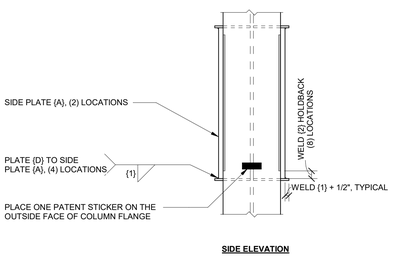

SIDE ELEVATION

NOTE(S):
1. PROTECTED ZONE ON SIDE PLATE EXTENDS FROM INSIDE FACE OF COLUMN FLANGE TO EDGE OF BOLT HOLE.
2. DIMENSION BETWEEN PLATE {D} AND INSIDE FACE OF COLUMN FLANGE SHALL NOT EXCEED 1/4 INCH. THIS DIMENSION MAY VARY DEPENDING ON THE DETAILER'S PREFERENCE TO ACCOMMODATE MILL TOLERANCE AND/OR THE UNIFORMITY OF PIECE MARKS.
3. THE 1/2 INCH OVERHANG ON THE SIDE PLATE {A} IS TO ENSURE SUFFICIENT ROOM FOR WELD {2}, THE +/- TOLERANCE IS APPLIED SO THAT IF DESIRED, THE DETAILER CAN MAKE THE SIDE PLATES {A} THE SAME LENGTH WITH SLIGHTLY VARYING COLUMN DEPTHS WITHIN A GROUP OF THE SAME CONNECTION ID'S.
4. DIMENSION A = GAP+(HORIZONTAL BOLTS)*(S)

1 A TYPE NARROW BOLTED CONNECTION
N.T.S.

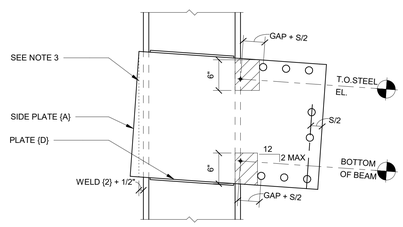

FRONT ELEVATION

NOTE(S):
1. FOR BEAM SLOPES GREATER THAN 2 INCHES PER FOOT, CONTACT SIDEPLATE SYSTEMS, INC.
2. COORDINATE PLATES, ANGLES, AND DIMENSIONS WITH RESPECT TO THE SLOPE OF THE CONNECTION.
3. AT CONTRACTOR'S DISCRETION, SIDE PLATE {A} MAY BE CUT AS SHOWN.

5 SLOPED DOWN CONNECTION
N.T.S.

HKS

ARCHITECT
HKS ARCHITECTS, INC.
90 SOUTH 400 WEST, #110
SALT LAKE CITY, UTAH 84101

CON1-DISCIPLINE
CON1-COMPANY
CON1-ADDRESS1
CON1-ADDRESS2

CON2-DISCIPLINE
CON2-COMPANY
CON2-ADDRESS1
CON2-ADDRESS2

CON3-DISCIPLINE
CON3-COMPANY
CON3-ADDRESS1
CON3-ADDRESS2

CON4-DISCIPLINE
CON4-COMPANY
CON4-ADDRESS1
CON4-ADDRESS2

E/T ENGINEER
LYNK ENGINEERS
324 SOUTH STATE STREET, SUITE 400
SALT LAKE CITY, UTAH 84111

Intermountain Health

UTAH VALLEY SPORTS PERFORMANCE CENTER

PROJECT ADDRESS:

SEAL & SIGNATURE

KEY PLAN

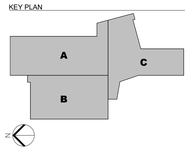

REVISION

NO.	DESCRIPTION	DATE

HKS PROJECT NUMBER
.000

DATE
08/24/26

ISSUE

SHEET TITLE
SIDEPLATE COLUMN DETAILS, A TYPE NARROW

SHEET NO.
SF212

© HKS, INC.

TITLE BLOCK VERSION: 20210930
MODEL: C:\Users\40\OneDrive - MiTek\Desktop\PROJECTS\Utah Valley Sports PC\UV Sports PC_SIDEPLATE PLUS (SMF17216).rvt
PRINT DATE: 8/24/2026 3:41:21 PM TEMPLATE VERSION:

INTELLECTUAL PROPERTY RIGHTS NOTICE
The SIDEPLATE® steel frame connection system is covered by one or more of U.S. Pat. Nos. 6,138,427; 6,516,583; 6,591,573; 7,178,296; 8,122,671; 8,122,672; 8,146,322; 8,176,706; 8,205,408; and 9,091,065 and foreign counterparts. Other U.S. and foreign applications pending.

SIDEPLATE® is a registered trademark of MiTek Holdings, Inc., an affiliate of SidePlate Systems, Inc.

Copyright © 2026 SidePlate Systems, Inc. All rights reserved. Without limitation, this drawing and the information hereon may be used only following payment of a license fee to SidePlate Systems, Inc. and for the design, construction, operation, repair, maintenance, restoration or demolition of the building(s) specifically identified.

v17.32.08 2bar BOLTED

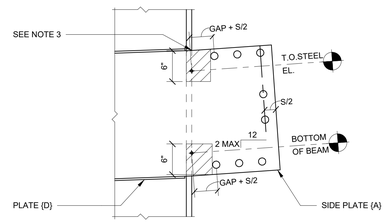

FRONT ELEVATION

NOTE(S):
1. FOR BEAM SLOPES GREATER THAN 2 INCHES PER FOOT, CONTACT SIDEPLATE SYSTEMS, INC.
2. COORDINATE PLATES, ANGLES, AND DIMENSIONS WITH RESPECT TO THE SLOPE OF THE CONNECTION.
3. BEGIN SLOPE OF SIDE PLATE AT OUTSIDE FACE OF COLUMN FLANGE, TYPICAL. NOTE THAT SLOPE OF SIDE PLATE WITHIN THE COLUMN EXTENTS MAY NOT MATCH SLOPE OF BEAM.

4 SLOPED UP CONNECTION
N.T.S.

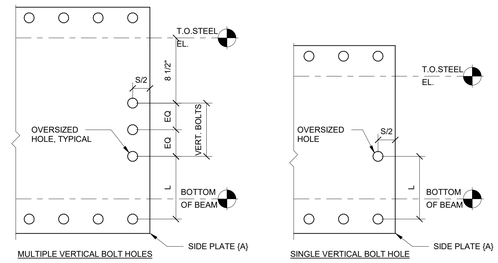

MULTIPLE VERTICAL BOLT HOLES

SINGLE VERTICAL BOLT HOLE

NOTE(S):
1. SEE COLUMN SCHEDULE FOR BOLT QUANTITY.

3 SIDE PLATE {A} VSE BOLT HOLE DETAIL (AS APPLICABLE)
N.T.S.

NOTE(S):
1. FOR VERTICAL BOLT HOLE INFORMATION SEE DETAIL 3 / SF213
2. AS APPLICABLE, FOR MISCELLANEOUS DETAILS INDICATED BY IDS "M#", REFER TO SIDEPLATE MISCELLANEOUS DETAILS SHEET.

2 B TYPE NARROW COLUMN CONNECTION SCHEDULE
N.T.S.

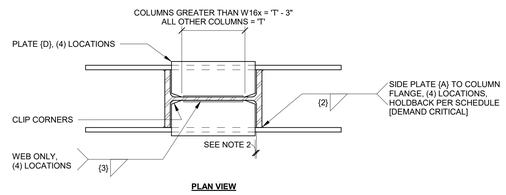

PLAN VIEW

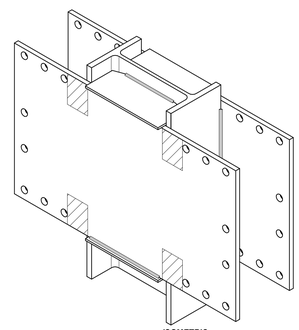

ISOMETRIC

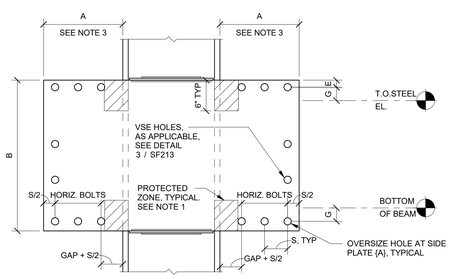

FRONT ELEVATION

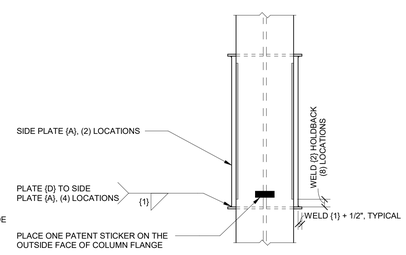

SIDE ELEVATION

NOTE(S):
1. PROTECTED ZONE ON SIDE PLATE EXTENDS FROM INSIDE FACE OF COLUMN FLANGE TO EDGE OF BOLT HOLE.
2. DIMENSION BETWEEN PLATE {D} AND INSIDE FACE OF COLUMN FLANGE SHALL NOT EXCEED 1/4 INCH. THIS DIMENSION MAY VARY DEPENDING ON THE DETAILER'S PREFERENCE TO ACCOMMODATE MILL TOLERANCE AND/OR THE UNIFORMITY OF PIECE MARKS.
3. DIMENSION A = GAP+(HORIZONTAL BOLTS)*(S)

1 B TYPE NARROW BOLTED CONNECTION
N.T.S.

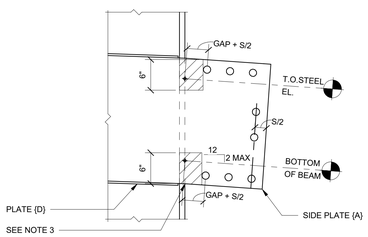

FRONT ELEVATION

NOTE(S):
1. FOR BEAM SLOPES GREATER THAN 2 INCHES PER FOOT, CONTACT SIDEPLATE SYSTEMS, INC.
2. COORDINATE PLATES, ANGLES, AND DIMENSIONS WITH RESPECT TO THE SLOPE OF THE CONNECTION.
3. BEGIN SLOPE OF SIDE PLATE AT OUTSIDE FACE OF COLUMN FLANGE, TYPICAL. NOTE THAT SLOPE OF SIDE PLATE WITHIN THE COLUMN EXTENTS MAY NOT MATCH SLOPE OF BEAM.

5 SLOPED DOWN CONNECTION
N.T.S.

HKS

ARCHITECT
HKS ARCHITECTS, INC.
90 SOUTH 400 WEST, #110
SALT LAKE CITY, UTAH 84101

CON1-DISCIPLINE
CON1-COMPANY
CON1-ADDRESS1
CON1-ADDRESS2

CON2-DISCIPLINE
CON2-COMPANY
CON2-ADDRESS1
CON2-ADDRESS2

CON3-DISCIPLINE
CON3-COMPANY
CON3-ADDRESS1
CON3-ADDRESS2

CON4-DISCIPLINE
CON4-COMPANY
CON4-ADDRESS1
CON4-ADDRESS2

E/T ENGINEER
LYNK ENGINEERS
324 SOUTH STATE STREET, SUITE 400
SALT LAKE CITY, UTAH 84111

Intermountain Health

UTAH VALLEY SPORTS PERFORMANCE CENTER

PROJECT ADDRESS:

SEAL & SIGNATURE

KEY PLAN

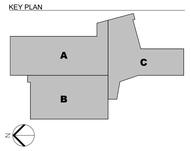

REVISION

NO.	DESCRIPTION	DATE

HKS PROJECT NUMBER
.000

DATE
08/24/26

ISSUE

SHEET TITLE
SIDEPLATE COLUMN DETAILS, B TYPE NARROW

SHEET NO.
SF213

© HKS, INC.

TITLE BLOCK VERSION: 20210930
MODEL: C:\Users\40ZOneDrive - MiTek\Desktop\PROJECTS\Utah Valley Sports PC\UV Sports PC_SIDEPLATE PLUS (SMF17216).rvt
PRINT DATE: 8/24/2026 3:41:21 PM TEMPLATE VERSION:

INTELLECTUAL PROPERTY RIGHTS NOTICE
The SIDEPLATE® steel frame connection system is covered by one or more of U.S. Pat. Nos. 6,138,427; 6,516,583; 6,591,573; 7,178,296; 8,122,671; 8,122,672; 8,146,322; 8,176,706; 8,205,408; and 9,091,065 and foreign counterparts. Other U.S. and foreign applications pending.

SIDEPLATE® is a registered trademark of MiTek Holdings, Inc., an affiliate of SidePlate Systems, Inc.

Copyright © 2026 SidePlate Systems, Inc. All rights reserved. Without limitation, this drawing and the information hereon may be used only following payment of a license fee to SidePlate Systems, Inc. and for the design, construction, operation, repair, maintenance, restoration or demolition of the building(s) specifically identified.
v17.32.08
2bar BOLTED

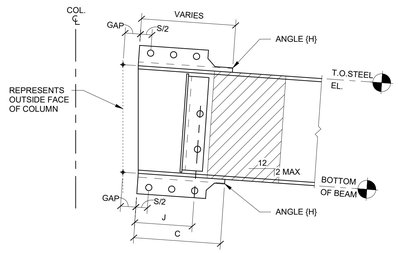

ELEVATION VIEW

NOTE(S):
1. FOR BEAM SLOPES GREATER THAN 2 INCHES PER FOOT, CONTACT SIDEPLATE SYSTEMS, INC.

8 SLOPED DOWN BEAM END
N.T.S.

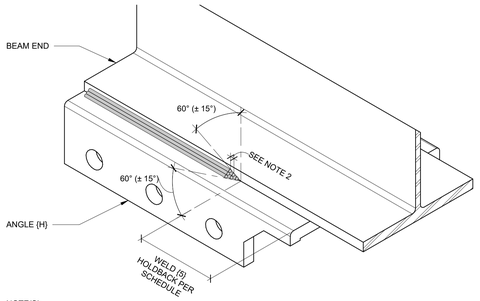

NOTE(S):
1. WELD {5} IS SHOWN FROM THE BOTTOM BEAM FLANGE TO THE BOTTOM ANGLE {H}, BUT IT ALSO OCCURS ON THE TOP BEAM FLANGE WHERE IT CONNECTS TO COVER PLATE {B} OR TOP ANGLE {H}. THERE ARE FOUR TOTAL LOCATIONS PER BEAM END.
2. USING APPROXIMATELY A 1/4 INCH STEP BETWEEN ALL WELD PASSES WILL PROVIDE THE REQUIRED TRANSITION AS DEMONSTRATED THROUGH PHYSICAL TESTING. END PROFILE SHALL BE APPROXIMATELY 60 DEGREES +/- 15 DEGREES.

4 WELD {5} HOLDBACK AND END PROFILE
N.T.S.

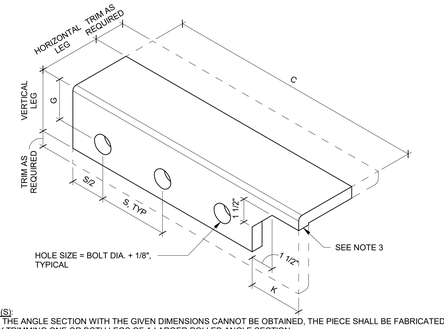

NOTE(S):
1. IF THE ANGLE SECTION WITH THE GIVEN DIMENSIONS CANNOT BE OBTAINED, THE PIECE SHALL BE FABRICATED BY TRIMMING ONE OR BOTH LEGS OF A LARGER ROLLED ANGLE SECTION.
2. SUGGESTED ANGLE {H} SIZE PROVIDED IN SCHEDULE IS BASED ON COMMONLY AVAILABLE SHAPES PER AISC. IF THE ANGLE {H} SECTION WITH THE GIVEN DIMENSIONS CANNOT BE OBTAINED, THE PIECE SHALL BE FABRICATED BY TRIMMING ONE OR BOTH LEGS OF A LARGER AVAILABLE ANGLE SECTION.
3. ANY ANGLE OF THE REQUIRED THICKNESS THAT IS CAPABLE OF MEETING THE PROPER MATERIAL SPECIFICATIONS AND LEG DIMENSION REQUIREMENTS GIVEN IN THE SCHEDULE MAY BE USED FOR ANGLE {H}.
4. MITER CUT NEED NOT BE FLUSH WITH HORIZONTAL LEG. DIMENSION MITER CUT TO UNDERSIDE OF HORIZONTAL LEG SHALL NOT EXCEED 1/2 INCH.

3 ANGLE {H} DETAIL
N.T.S.

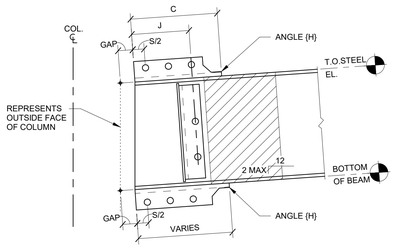

ELEVATION VIEW

NOTE(S):
1. FOR BEAM SLOPES GREATER THAN 2 INCHES PER FOOT, CONTACT SIDEPLATE SYSTEMS, INC.

7 SLOPED UP BEAM END
N.T.S.

2 NARROW BEAM END SCHEDULE
N.T.S.

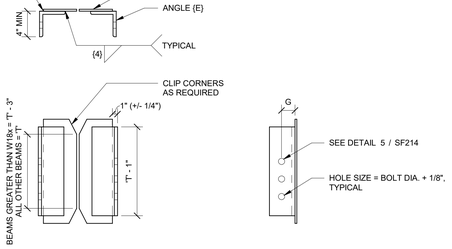

NOTE(S):
1. SEE SIDEPLATE SCHEDULE FOR BOLT QUANTITY

6 VSE {F} DETAIL (AS APPLICABLE)
N.T.S.

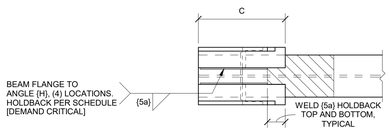

PLAN VIEW

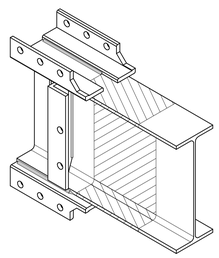

ISOMETRIC VIEW

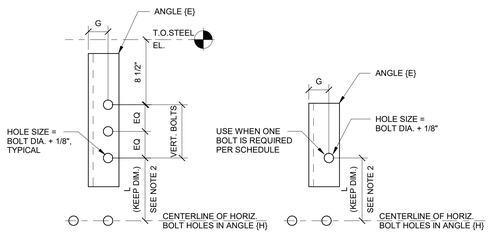

MULTIPLE VERTICAL BOLT HOLES **SINGLE VERTICAL BOLT HOLE**

NOTE(S):
1. SEE BEAM END SCHEDULE FOR BOLT QUANTITY.
2. EFFECTS OF MILL AND FABRICATION TOLERANCES ARE ACCOUNTED FOR BY MEASURING FROM THE CENTERLINE OF THE HORIZONTAL ROW OF BOLTS IN THE BOTTOM ANGLES {H}.

5 VSE {F} HOLE DETAIL (AS APPLICABLE)
N.T.S.

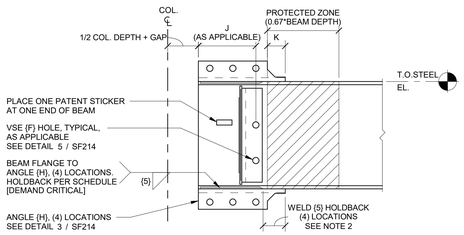

FRONT ELEVATION

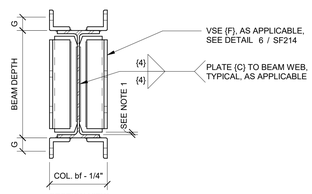

SECTION VIEW

NOTE(S):
1. DIMENSION BETWEEN PLATE (C) AND INSIDE FACE OF BEAM FLANGE SHALL NOT EXCEED 1/4 INCH, AND MAY VARY DEPENDING ON BEAM MILL TOLERANCES. PLATE (C) SHALL BE CENTERED ON THE DEPTH OF THE BEAM.
2. THIS HOLDBACK AND WELD END PROFILE ARE CRITICAL TO THE PERFORMANCE OF THE CONNECTION. SEE DETAIL 4 / SF214

1 NARROW BEAM END DETAIL
N.T.S.

© HKS, INC.

HKS

ARCHITECT
HKS ARCHITECTS, INC.
90 SOUTH 400 WEST, #110
SALT LAKE CITY, UTAH 84101

CON1-DISCIPLINE
CON1-COMPANY
CON1-ADDRESS1
CON1-ADDRESS2

CON2-DISCIPLINE
CON2-COMPANY
CON2-ADDRESS1
CON2-ADDRESS2

CON3-DISCIPLINE
CON3-COMPANY
CON3-ADDRESS1
CON3-ADDRESS2

CON4-DISCIPLINE
CON4-COMPANY
CON4-ADDRESS1
CON4-ADDRESS2

E/T ENGINEER
LYNK ENGINEERS
324 SOUTH STATE STREET, SUITE 400
SALT LAKE CITY, UTAH 84111

Intermountain Health

UTAH VALLEY SPORTS PERFORMANCE CENTER

PROJECT ADDRESS:

SEAL & SIGNATURE

KEY PLAN

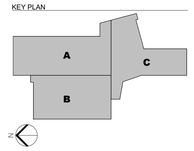

REVISION

NO.	DESCRIPTION	DATE

HKS PROJECT NUMBER
.000

DATE
08/24/26

ISSUE

SHEET TITLE
SIDEPLATE BEAM DETAILS, NARROW

SHEET NO.
SF214

TITLE BLOCK VERSION: 20210930
MODEL: C:\Users\40220\OneDrive - MiTek\Desktop\PROJECTS\Utah Valley Sports PC\UV Sports PC - SIDEPLATE PLUS (SMF17216).rvt
PRINT DATE: 8/24/2026 3:41:21 PM TEMPLATE VERSION:

INTELLECTUAL PROPERTY RIGHTS NOTICE
The SIDEPLATE® steel frame connection system is covered by one or more of U.S. Pat. Nos. 6,138,427; 6,516,583; 6,591,573; 7,178,296; 8,122,671; 8,122,672; 8,146,322; 8,176,706; 8,205,408; and 9,091,065 and foreign counterparts. Other U.S. and foreign applications pending.

SIDEPLATE® is a registered trademark of MiTek Holdings, Inc., an affiliate of SidePlate Systems, Inc.

Copyright © 2026 SidePlate Systems, Inc. All rights reserved. Without limitation, this drawing and the information hereon may be used only following payment of a license fee to SidePlate Systems, Inc. and for the design, construction, operation, repair, maintenance, restoration or demolition of the building(s) specifically identified.
v17.32.08
2bar BOLTED

TITLE BLOCK VERSION: 20210820

3 NARROW BEAM ERECTION SCHEDULE
N.T.S.

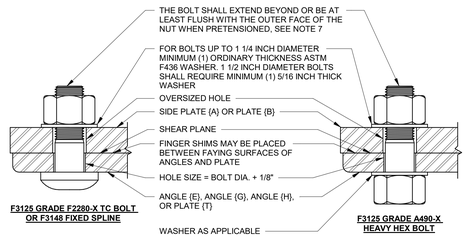

NOTE(S):
1. BOLTS SHALL BE INSTALLED AS SHOWN TO KEEP THREADS OUTSIDE OF SHEAR PLANE.
2. BOLTS SHALL BE SYSTEMATICALLY INSTALLED AS OUTLINED IN THE BOLTING SPECIFICATIONS. FIRST TO A SNUG TIGHT CONDITION, AND THEN PRETENSIONED.
3. USE FINGER SHIMS FOR GAPS GREATER THAN 1/8 INCH UP TO 1/4 INCH. CONTACT SIDEPLATE SYSTEMS, INC. IF GAPS ARE GREATER THAN 1/4 INCH.
4. NUT SHALL BE ASTM A563.
5. THE BOLT/FASTENER ASSEMBLY SHALL BE COVERED IN A LIGHT PROTECTIVE OIL.
6. FOLLOW QUALITY CONTROL SECTION FOR EXPOSURE LIMITATION ON BOLTS/FASTENERS.
7. STEEL DETAILER TO COORDINATE BOLT LENGTHS WITH REQUIRED WASHERS AND POTENTIAL SHIMMING THICKNESS WITH STEEL FABRICATOR.
8. ALL BOLT HOLES SHALL BE ALIGNED TO PERMIT INSERTION OF THE BOLTS WITHOUT UNDUE DAMAGE TO THE THREADS.
9. THE MINIMUM EDGE DISTANCE FROM THE CENTER OF THE HOLE TO THE EDGE OF THE CONNECTED PART IS PERMITTED TO BE LESS THAN THE MINIMUM EDGE DISTANCE PRESCRIBED BY AISC TABLE J3.4 FOR EACH BOLT DIAMETER, BUT SHALL NOT BE LESS THAN ONE BOLT DIAMETER.
10. BOLT ORIENTATION IS PERMITTED TO BE FLIPPED IF THE FOLLOWING CONDITIONS ARE MET:
    A. IF A HEAVY HEX BOLT IS USED, AN ADDITIONAL WASHER ON THE OVERSIZED HOLE SIDE IS REQUIRED. VERIFY THREAD ARE EXCLUDED FROM THE SHEAR PLANE.
    B. IF A TC BOLT IS USED, NO ADDITIONAL WASHER IS REQUIRED. VERIFY THREADS ARE EXCLUDED FROM THE SHEAR PLANE.
11. WHEN USING DIRECT TENSION INDICATORS (DTI) FOR PRETENSIONING. VERIFY IF ADDITIONAL WASHER IS REQUIRED TO ENSURE DTIs CAN WORK EFFECTIVELY WHEN PRETENSIONED.

2 FIELD BOLTING DETAIL
N.T.S.

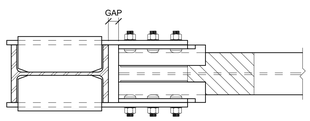

PLAN VIEW

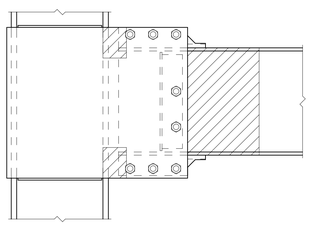

FRONT ELEVATION

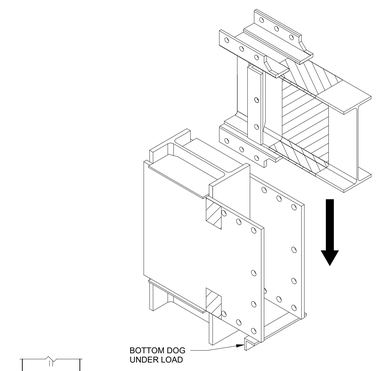

1. LOWER BEAM INTO PLACE

2. STUFF A FEW BOLTS TO SECURE ASSEMBLY

SECTION VIEW

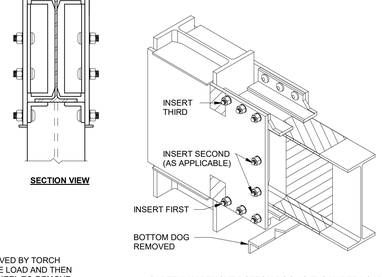

3. CAREFULLY REMOVE BOTTOM DOG AS IT IS UNDER LOAD. THEN INSERT ALL REMAINING BOLTS STARTING WITH THE BOTTOM ROW, THEN THE VERTICAL ROW, AND LAST THE TOP ROW.

4. SYSTEMATICALLY PRE-TENSION BOLTS PER SPECIFICATIONS, STARTING WITH THE TIGHTEST PLIES FIRST. (NOTE: COORDINATE LOT TESTING AND INSPECTIONS WITH THIRD PARTY INSPECTION TEAM AS APPROPRIATE)

TYPICAL SEQUENCE OF ERECTION:
1. LOWER THE BEAM INTO PLACE FROM ABOVE.
2. INSERT A FEW BOLTS TO SECURE ASSEMBLY.
3. **BOTTOM DOG SHALL BE REMOVED**. IT IS RECOMMENDED THAT IT BE REMOVED BY TORCH CUTTING A 'V' SECTION OUT OF ONE OF THE ANGLE LEGS TO ALLEVIATE THE LOAD AND THEN PROCEED TO REMOVE IT. **IT IS NOT RECOMMENDED TO USE A GRINDING WHEEL TO REMOVE THE WELDS WHILE THE DOG IS UNDER LOAD!**
4. BOLTS SHALL BE INSERTED INTO HOLES IN THE SIDE PLATES (A).
5. SYSTEMATICALLY PRE-TENSION BOLTS PER RCSC SPECIFICATIONS.
6. THE WELD REMNANTS OF THE BOTTOM DOG MAY REMAIN IN PLACE AND DO NOT NEED TO BE GROUND SMOOTH.

1 NARROW BEAM ERECTION DETAIL
N.T.S.

© HKS, INC.

HKS

ARCHITECT
HKS ARCHITECTS, INC.
90 SOUTH 400 WEST, #110
SALT LAKE CITY, UTAH 84101

CON1-DISCIPLINE
CON1-COMPANY
CON1-ADDRESS1
CON1-ADDRESS2

CON2-DISCIPLINE
CON2-COMPANY
CON2-ADDRESS1
CON2-ADDRESS2

CON3-DISCIPLINE
CON3-COMPANY
CON3-ADDRESS1
CON3-ADDRESS2

CON4-DISCIPLINE
CON4-COMPANY
CON4-ADDRESS1
CON4-ADDRESS2

E/T ENGINEER
LYNK ENGINEERS
324 SOUTH STATE STREET, SUITE 400
SALT LAKE CITY, UTAH 84111

Intermountain Health

UTAH VALLEY SPORTS PERFORMANCE CENTER

PROJECT ADDRESS:

SEAL & SIGNATURE

KEY PLAN

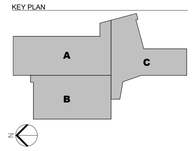

REVISION

NO.	DESCRIPTION	DATE

HKS PROJECT NUMBER
.000

DATE
08/24/26

ISSUE

SHEET TITLE
SIDEPLATE FIELD ERECTION DETAILS

SHEET NO.
SF215

MODEL: C:\Users\40224\OneDrive - MiTek\Desktop\PROJECTS\Utah Valley Sports PC\UV Sports PC_SIDEPLATE PLUS (SMF17216).rvt
PRINT DATE: 8/24/2026 3:41:22 PM TEMPLATE VERSION:

INTELLECTUAL PROPERTY RIGHTS NOTICE
The SIDEPLATE® steel frame connection system is covered by one or more of U.S. Pat. Nos. 6,138,427; 6,516,583; 6,591,573; 7,178,296; 8,122,671; 8,122,672; 8,146,322; 8,176,706; 8,205,408; and 9,091,065 and foreign counterparts. Other U.S. and foreign applications pending.

SIDEPLATE® is a registered trademark of MiTek Holdings, Inc., an affiliate of SidePlate Systems, Inc.

Copyright © 2026 SidePlate Systems, Inc. All rights reserved. Without limitation, this drawing and the information hereon may be used only following payment of a license fee to SidePlate Systems, Inc. and for the design, construction, operation, repair, maintenance, restoration or demolition of the building(s) specifically identified.
v17.32.08
2MF BOLTED

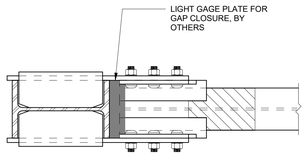

PLAN VIEW

NOTE(S):
1. THE STEEL DETAILER SHOULD CONFIRM AND COORDINATE WITH THE GENERAL CONTRACTOR AND/OR STEEL FABRICATOR WHICH PREFERRED OPTION OR PROJECT SPECIFIC CRITERIA TO USE FOR THE GAP CLOSURE.
2. SEE GENERAL NOTES FIREPROOFING SECTION FOR MORE DETAILS.

8 (OPTIONAL) GAP CLOSURE DETAIL NARROW
N.T.S.

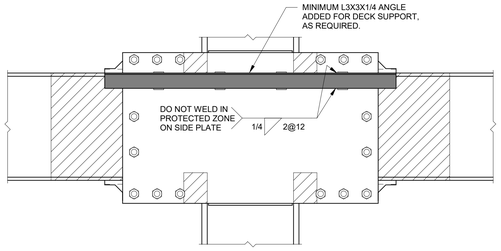

FRONT ELEVATION

NOTE(S):
1. THE STEEL DETAILER SHOULD CONFIRM AND COORDINATE WITH THE GENERAL CONTRACTOR AND/OR STEEL FABRICATOR WHICH PREFERRED OPTION OR PROJECT SPECIFIC CRITERIA TO USE FOR THE DECK SUPPORT.

4 (OPTIONAL) DECK SUPPORT ANGLE DETAIL
N.T.S.

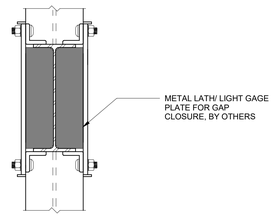

SECTION VIEW

NOTE(S):
1. THE STEEL DETAILER SHOULD CONFIRM AND COORDINATE WITH THE GENERAL CONTRACTOR AND/OR STEEL FABRICATOR WHICH PREFERRED OPTION OR PROJECT SPECIFIC CRITERIA TO USE FOR THE GAP CLOSURE.
2. SEE GENERAL NOTES FIREPROOFING SECTION FOR MORE DETAILS.

7 (OPTIONAL) NO VSE BEAM GAP CLOSURE DETAIL NARROW
N.T.S.

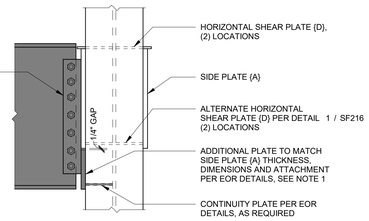

SIDE ELEVATION

NOTE(S):
1. PLATE SHALL BE A572 GRADE 50. NO WELD TIE-IN ACROSS 1/4 INCH GAP.
2. LONGITUDINAL ANGLES {G} NOT SHOWN FOR CLARITY.
3. SEE SCHEDULE FOR INFORMATION NOT SHOWN.

3 DEEP SHEAR CONNECTION TO SIDEPLATE CONNECTION (AS APPLICABLE)
N.T.S.

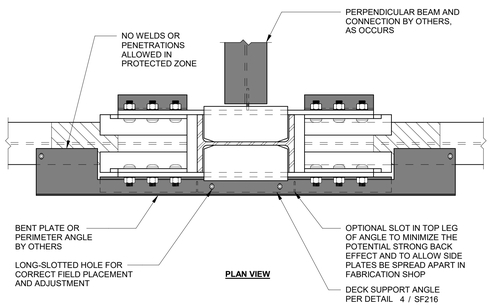

PLAN VIEW

NOTE(S):
1. THE STEEL DETAILER SHOULD CONFIRM AND COORDINATE WITH THE GENERAL CONTRACTOR AND/OR STEEL FABRICATOR WHICH PREFERRED OPTION OR PROJECT SPECIFIC CRITERIA TO USE FOR THE DECK SUPPORT.

6 (OPTIONAL) NARROW CONFIGURATION SLAB EDGE DETAIL
N.T.S.

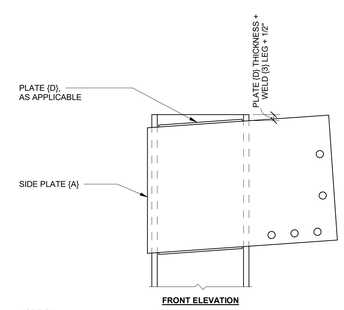

FRONT ELEVATION

NOTE(S):
1. SLOPED CONDITION SHOWN, CONNECTION MAY BE FLAT.
2. LONGITUDINAL ANGLES {G} NOT SHOWN FOR CLARITY.

2 DISCONTINUOUS COLUMN DETAIL
N.T.S.

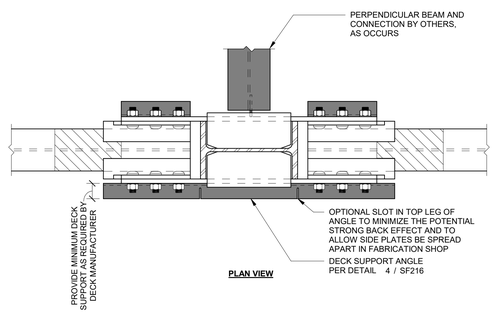

PLAN VIEW

NOTE(S):
1. THE STEEL DETAILER SHOULD CONFIRM AND COORDINATE WITH THE GENERAL CONTRACTOR AND/OR STEEL FABRICATOR WHICH PREFERRED OPTION OR PROJECT SPECIFIC CRITERIA TO USE FOR THE DECK SUPPORT.

5 (OPTIONAL) NARROW CONFIGURATION DECK SUPPORT DETAIL
N.T.S.

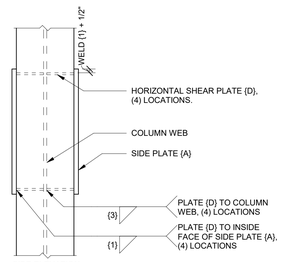

SIDE ELEVATION

NOTE(S):
1. LONGITUDINAL ANGLES {G} NOT SHOWN FOR CLARITY.
2. SEE SCHEDULE FOR INFORMATION NOT SHOWN.

1 PLATE {D} ALTERNATE DETAIL
N.T.S.

© HKS, INC.

HKS

ARCHITECT
HKS ARCHITECTS, INC.
90 SOUTH 400 WEST, #110
SALT LAKE CITY, UTAH 84101

CON1-DISCIPLINE
CON1-COMPANY
CON1-ADDRESS1
CON1-ADDRESS2

CON2-DISCIPLINE
CON2-COMPANY
CON2-ADDRESS1
CON2-ADDRESS2

CON3-DISCIPLINE
CON3-COMPANY
CON3-ADDRESS1
CON3-ADDRESS2

CON4-DISCIPLINE
CON4-COMPANY
CON4-ADDRESS1
CON4-ADDRESS2

E/T ENGINEER
LYNK ENGINEERS
324 SOUTH STATE STREET, SUITE 400
SALT LAKE CITY, UTAH 84111

Intermountain Health

UTAH VALLEY SPORTS PERFORMANCE CENTER

PROJECT ADDRESS:

SEAL & SIGNATURE

KEY PLAN

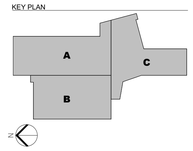

REVISION

NO.	DESCRIPTION	DATE

HKS PROJECT NUMBER
.000

DATE
08/24/26

ISSUE

SHEET TITLE
SIDEPLATE COORDINATION ITEMS

SHEET NO.
SF216

TITLE BLOCK VERSION: 20210930
MODEL: C:\Users\40225\OneDrive - MiTek\Desktop\PROJECTS\Utah Valley Sports PC\UV Sports PC_SIDEPLATE PLUS_(SMF17291).rvt
PRINT DATE: 8/24/2026 3:41:22 PM TEMPLATE VERSION:

TITLE BLOCK VERSION: 20251930

MODEL: C:\Users\40224\OneDrive - MiTek\Desktop\PROJECTS\Utah Valley Sports PC\UV Sports PC_SIDEPLATE PLUS (SMF17321B).rvt

PRINT DATE: 8/24/2026 3:41:23 PM TEMPLATE VERSION:

CONSTRUCTION GUIDELINES

1. THE CONTRACTOR SHALL ASSUME FULL AND COMPLETE RESPONSIBILITY FOR THE MEANS AND METHODS OF CONSTRUCTING THE STEEL FRAME USING THE SIDEPLATE BOLTED SYSTEM. CONSTRUCTION MEANS AND METHODS SHALL BE COMPLIANT WITH THE CURRENT PROVISIONS OF AWS D1.1, AISC 360 CODE OF STANDARD PRACTICE, THE RCSC HIGH-STRENGTH BOLTING SPECIFICATIONS, AND THE CONSTRUCTION GUIDELINES PROVIDED HEREIN AND SHALL INCLUDE, BUT ARE NOT LIMITED TO:
   a. DIMENSIONAL VERIFICATION AND CONTROL
   b. FILLET WELD END PROFILE AND HOLD BACK DISTANCES FROM EDGE OF PLATE, SEE GRAPHIC NO. 7 AND GRAPHIC NO. 8
   c. STEEL DETAILING AND ERECTION DRAWINGS
   d. FABRICATION AND ERECTION PROCEDURES (INCLUDING METHODS FOR CONTROLLING DISTORTION DUE TO WELD SHRINKAGE, AND FOR CONTROLLING COMBINED MILL, FABRICATION AND ERECTION TOLERANCES)
   e. WELDING PROCEDURES
   f. WELDING SEQUENCE OF FABRICATED AND ERECTED ELEMENTS
   g. QUALITY CONTROL MEASURES
   h. CONSTRUCTION AIDS SUCH AS ERECTION RIGGING AND SHORING
   i. PROPER BOLT HOLE ALIGNMENT
   j. PROPER PRETENSIONING OF BOLTS
2. THE SEQUENCE OF CONSTRUCTION OPTIONS PROVIDED BELOW IN THESE CONSTRUCTION GUIDELINES HAVE PROVEN TO BE SUCCESSFUL BY STEEL FABRICATORS AND ERECTORS TO COST EFFICIENTLY CONSTRUCT THE BOLTED SIDEPLATE CONNECTION SYSTEM. VARIATIONS TO THESE CONSTRUCTION SEQUENCE OPTIONS PROVIDED BELOW SHALL BE SUBMITTED FOR REVIEW AND DISPOSITION TO SIDEPLATE SYSTEMS, INC.
3. A PRE-DETAILING MEETING, PRE-FABRICATION MEETING, AND PRE-ERECTION MEETING WITH A SIDEPLATE SYSTEMS, INC REPRESENTATIVE ARE REQUIRED FOR ALL PROJECTS. THE MEETINGS ARE INTENDED TO SHARE BEST PRACTICES AND COMMON MISTAKES TO AVOID.
4. COLUMN/BEAM SEPARATION (GAP) CLOSURE
   a. PROVIDE A FOLDED STRIP OF LIGHT GAGE METAL, OR SIMILAR, SECURED TO STEEL SURFACES BY DUCT TAPE OR A TACK WELD LOCATED AS CLOSE AS PRACTICABLE TO THE MID SECTION OF THE BEAM FLANGES OR TOP COVER PLATE (B) ACROSS THE PHYSICAL COLUMN/BEAM SEPARATION (GAP) BETWEEN THE BEAM FLANGES OR TOP COVER PLATE (B) AND THE FACE OF COLUMN FLANGE. THIS SHALL PREVENT CONCRETE FILL FROM ENTERING THROUGH THE SEPARATION (GAP).
   b. IN NO CASE SHALL THE FOLDED STRIP OF LIGHT GAGE MATERIAL BE WELDED TO THE EDGE OF SIDE PLATE (A), OR TO THE FACE OF COLUMN FLANGE TO ACHIEVE CLOSURE OF THE PHYSICAL COLUMN/BEAM SEPARATIONS.
5. WHEN NO VSE OPTION IS SPECIFIED, PROVIDE A CLOSURE PLATE, AS NEEDED, FOR SFRM MATERIAL TO MORE EASILY ADHERE TO. ATTACH CLOSURE PLATE TO THE INSIDE OR OUTSIDE FACE OF THE SIDE PLATE (A) WITHIN THE MIDDLE HALF OF THE SIDE PLATE (A) HEIGHT. DO NOT ATTACH CLOSURE PLATE TO THE BEAM FLANGES OR WEB.

SHOP FABRICATION OF THE SIDEPLATE BOLTED SYSTEM

1. COLUMN TREE ASSEMBLY
   a. TACK SIDE PLATES (A) AND HORIZONTAL SHEAR PLATES (D) TO THE COLUMN.
      - QC INSPECTION SHALL PROVIDE VERIFICATION THAT ACTUAL COLUMN FLANGE WIDTH IS AT LEAST NOMINAL COLUMN FLANGE WIDTH WHERE THE SIDE PLATES (A) ARE TO BE INSTALLED. IN THE UNLIKELY EVENT ACTUAL COLUMN FLANGE WIDTH IS LESS THAN NOMINAL BUT WITHIN AISC STANDARD MILL TOLERANCES (-3/16 INCH), OR THERE IS A FLANGE OFFSET CREATING A CONDITION WHERE THE SIDE PLATES (A) ARE NOT PARALLEL TO ONE ANOTHER, THE FOLLOWING MAY BE APPLIED:
        - PLACE A STRUCTURAL GRADE SHIM (A572 GRADE 50KSI) BETWEEN THE SIDE PLATE (A) AND THE COLUMN FLANGE TO OFFSET THE DEFICIENT DISTANCE. THE CORRESPONDING WELD (2) SHALL THEN BE INCREASED BY THE SHIM THICKNESS.
   b. QC INSPECTION SHALL PROVIDE VERIFICATION THAT THE CENTERLINE OF THE TOP ROW OF THE LONGITUDINAL BOLT HOLES ARE SET TO THEIR CORRECT ELEVATION.
   c. WELD HORIZONTAL SHEAR PLATES (D) TO COLUMN WEB USING FILLET WELDS (3) ON OUTER FACE OF PLATE. WHEN WELD (3) OCCURS ON THE COLUMN FLANGES, A WELD TIE-IN OF FILLET WELDS (3) SHALL NOT BE ALLOWED ACROSS THE CLIPPED CORNER OF HORIZONTAL SHEAR PLATE (D) AT THE K-LINE AREA. SEE **PREPARATION** NOTE 4.a IN SIDEPLATE GENERAL NOTES.
   d. WELD HORIZONTAL SHEAR PLATES (D) TO SIDE PLATE (A) USING FILLET WELD (1).
   e. TEMPORARILY MAINTAIN A SLIGHT (E.G. 1/2 INCH +/-) FLARED-OUT SEPARATION OF SIDE PLATES (A) (CARE SHALL BE TAKEN TO NOT OVER SPREAD IN THIS CONDITION, AS THAT MAY BREAK THE TACKS HOLDING THE SIDE PLATE (A) IN PLACE). IN ANTICIPATION OF WELD (2) SHRINKAGE EFFECTS, PLACE SUITABLE CONSTRUCTION AIDS (SUCH AS ANGLE, PIPES OR WOOD BLOCK) AT THE TOP AND BOTTOM OF SIDE PLATE (A). AIDS MAY BE CUT TO FIT AND BEAR ON THE INSIDE FACE OF SIDE PLATES (A) OR CUT LONG AND TACKED TO THE EDGES OF SIDE PLATES (A). SUCH CONSTRUCTION AIDS ACT AS SPACERS DURING THE WELDING AND SUBSEQUENT COOL DOWN OF FILLET WELDS (2). SEE GRAPHIC NO. 1.
   f. WELD INSIDE FACE OF SIDE PLATES (A) TO THE FLANGE TIPS OF COLUMN USING FILLET WELDS (2). REFER TO GRAPHIC NO. 2 FOR CONDITIONS WITH NON-SQUARE COLUMN FLANGE TOES DUE TO MILL ROLLING.
      - SHIMS ARE PERMITTED BETWEEN SIDE PLATE (A) AND COLUMN FLANGE IN CONDITIONS DUE TO MILL ROLLING.
      - THE MATERIAL GRADE OF THE SHIM SHALL MATCH THE GRADE USED ON THE SIDE PLATE (A).
      - FILLET WELD SIZE SHALL BE INCREASED BY THE THICKNESS OF THE SHIM USED.
      - REFER TO GRAPHIC NO. 2A FOR MORE DETAIL.
   g. COLUMN FLANGE TRIMMING IS PERMITTED FOR CONDITIONS DUE TO MILL ROLLING.
      - TRIMMING MAY BE PERFORMED VIA GRINDING TO SMOOTH OUT ROUGH TRANSITIONS.
      - TRIMMING SHALL BE DONE FOR THE FULL LENGTH OF THE SIDE PLATE (A) DEPTH (DIMENSION B) PLUS 12 INCHES ABOVE AND BELOW THE TOP AND BOTTOM EDGES OF SIDE PLATE (A).
      - IF REPAIR WELDING IS REQUIRED TO FIX GAPS AND GOUGES LARGER THAN 3/16 INCH, IT SHALL BE DONE FOLLOWING AWS PROTOCOLS AND WITH AN APPROVED WPS.
      - THE FINAL SURFACE SHALL HAVE A MINIMUM 500 MICRO-INCH ANSI WORKMANLIKE FINISH.
      - ANY AND ALL TRANSITIONS SHALL BE 10:1.
      - THE FINAL FLANGE WIDTH DIMENSION SHALL BE, AS A MINIMUM, THE NOMINAL DESIGN DIMENSION.
   h. AFTER COOL DOWN OF COMPLETED FILLET WELDS (2), REMOVE TOP CONSTRUCTION AID. VERIFY MINIMUM CLEAR SPREAD DIMENSION (ACTUAL COLUMN FLANGE WIDTH) BETWEEN SIDE PLATES (A), SEE GRAPHIC NO. 3. THIS IS THE REQUIRED CLEARANCE FOR INSERTING THE BEAM ASSEMBLY.
      - IF CLEARANCE VERIFICATION IS SUFFICIENT (I.E. NOT LESS THAN THE ACTUAL COLUMN FLANGE WIDTH AND NOT EXCEEDING THE MAXIMUM SPREAD DIMENSION Y), A SUITABLE ERECTION AID (AKA BOTTOM 'DOG') SHALL BE WELDED TO THE BOTTOM EDGE OF THE SIDE PLATES (A). IT SHALL BE SUFFICIENTLY STRONG TO REMAIN IN PLACE DURING TRANSPORTATION AND ERECTION OF THE BEAM. THIS ERECTION AID WILL BE UNDER LOAD AND CARE SHALL BE TAKEN WHEN REMOVING.
      - IF CLEARANCE VERIFICATION IS NOT SUFFICIENT (I.E. LESS THAN THE NOMINAL COLUMN FLANGE WIDTH), FLEX SIDE PLATES (A) BY JACKING THEM APART TO A DIMENSION GREATER THAN THE WIDTH OF COLUMN FLANGE. MAXIMUM SEPARATION SHALL NOT EXCEED WIDTH OF COLUMN FLANGE PLUS SCHEDULED SPREAD DIMENSION Y. ONCE NECESSARY CLEARANCE HAS BEEN ESTABLISHED, A SUITABLE ERECTION AID (AKA BOTTOM 'DOG') SHALL THEN BE WELDED TO BOTTOM EDGE OF SIDE PLATES (A). IT SHALL BE SUFFICIENTLY STRONG TO REMAIN IN PLACE DURING TRANSPORTATION AND ERECTION OF BEAM ASSEMBLY. THIS ERECTION AID WILL BE UNDER LOAD AND CARE SHALL BE TAKEN WHEN REMOVING.
      - ALTERNATELY, HEAT STRAIGHTENING OF THE PLATES MAY BE USED TO MEET THE MINIMUM CLEAR DIMENSION SPREAD WITH THE FOLLOWING CRITERIA:
        - USING A 3/4 INCH ROSE BUD HEATING TIP, HEAT THE OUTSIDE FACE OF THE SIDE PLATE ADJUNCT TO THE FREE UNSUPPORTED SIDE OF THE COLUMN FLANGE FOR MAJORITY OF THE FULL DIMENSION B DEPTH (HOLD HEATING BACK FROM TOP AND BOTTOM ENDS OF SIDE PLATE (A) BY 2 INCHES). THE WIDTH OR HEAT ZONE SHALL BE 3/4 INCH TO 1 1/4 INCH. TRAVEL SPEED OF HEATING SHALL BE 2 INCHES PER MINUTE AND MAXIMUM TEMPERATURE INPUT SHALL NOT BE MORE THAN 950 DEGREES.

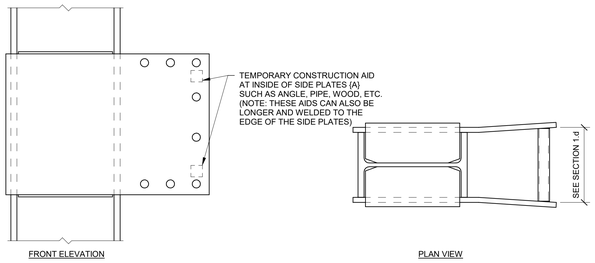

GRAPHIC NO. 1 - COLUMN TREE ASSEMBLY PREPARATION FOR WELD (2)

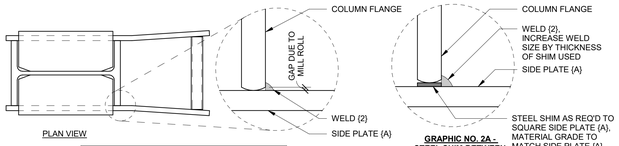

GRAPHIC NO. 2A - STEEL SHIM BETWEEN COLUMN FLANGE AND SIDE PLATE (A)

- IF MILL ROLL GAP ≤ 1/16", PERFORM FILLET WELD (2) AS SCHEDULED.
- IF MILL ROLL GAP > 1/16", RUN AN INITIAL PASS TO FILL GAP. THEN PERFORM FILLET WELD (2) AS SCHEDULED.

GRAPHIC NO. 2 - MILL ROLL INDUCED GAP

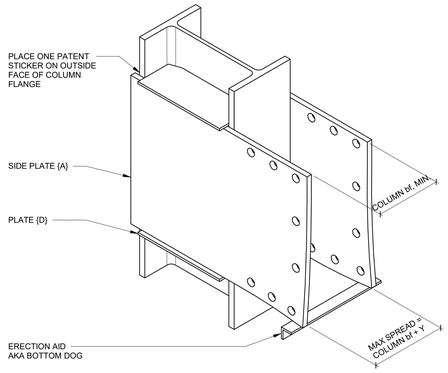

GRAPHIC NO. 3 - COMPLETED SIDEPLATE BOLTED COLUMN TREE ASSEMBLY

2. BEAM ASSEMBLY
   a. THE COVER PLATE (B) AND LONGITUDINAL ANGLES (H) SHALL BE PLACED AS PERPENDICULAR AS POSSIBLE TO THE WEB OF BEAM, REGARDLESS OF POSSIBLE FLANGE TILT (AS ROLLED BY THE MILL). SEE GRAPHIC NO. 4.
   b. PLACEMENT OF ANGLES (H) SHALL BE SUCH THAT THEIR BOLT HOLES ARE ALIGNED WITH EACH OTHER AS MUCH AS POSSIBLE IN BOTH THEIR VERTICAL AND HORIZONTAL POSITIONS, ALLOWING THE CENTERLINE OF THE LONGITUDINAL ROWS TO BE THE 'WORKING POINT' FOR THE PLACEMENT OF VSE (F). THIS WILL PROVIDE ASSURANCE THAT THE LONGITUDINAL BOLT HOLES IN THE BEAM ASSEMBLY WILL LINE UP WITH THE LONGITUDINAL BOLT HOLTS IN THE COLUMN ASSEMBLY. ANY OVER OR UNDER RUN IN THE AS BUILT DIMENSIONS SHOULD BE ACCOMMODATED BY THE OVERSIZED BOLT HOLE TOLERANCES.
   c. IN THE EVENT THE RADIUS OF THE ANGLE IS LARGER THAN THE EDGE DISTANCE REQUIRED TO PLACE FILLET WELD (5) FROM THE ANGLE (H) TO THE BEAM FLANGE TIPS, ROTATE ASSEMBLY ON ITS SIDE SO THAT THE WEB IS PARALLEL TO THE GROUND. IN THIS POSITION THE RADIUS OF THE ANGLE CAN BE BUILT UP. SEE GRAPHIC NO. 5.
   d. NOTE THAT IN SOME CONDITIONS ANGLES MAY NOT BE 90 DEGREES. CARE SHALL BE GIVEN TO MEASURE THE SUGGESTED WIDTH FROM THE MOST EXTREME POINT ON THE EXTERIOR FACE OF ANGLE (H) (WHICH MAY OCCUR AT THE TOE OF THE ANGLE VERSES ITS APEX).
   e. THE ENTIRE EXTERIOR FACE OF THE OUTSTANDING LEG OF ANGLE (H) SHALL BE PLACED PARALLEL TO THE WEB OF THE BEAM AS MUCH AS PRACTICABLE.
   f. WELD ANGLES (H) TO BEAM FLANGE USING FILLET WELD (5) AND (5a). SEE GRAPHIC NO. 8.
   g. WELD VSE (F) TO THE BEAM WEB, AS REQUIRED. SEE GRAPHIC NO. 8. IT IS RECOMMENDED THAT THE VSE (F) BE WELDED LAST AS A DISTORTION CONTROL METHOD DUE TO THE POTENTIAL WARPING EFFECTS OF WELD (5). THE EXTERIOR FACE OF THE VSE (F) SHALL EITHER BE FLUSH WITH THE EXTERIOR FACE OF ANGLE (H), OR SLIGHTLY RECESSED TOWARDS THE BEAM WEB UP TO 1/16 INCH FROM THE EXTERIOR FACE OF ANGLE (H), SEE GRAPHIC NO. 4. THE VERTICAL PLACEMENT OF THE VSE (F) SHALL BE SET BY THE KEEP DIMENSION FROM ITS BOTTOM BOLT HOLE TO THE CENTERLINE OF THE BOTTOM LONGITUDINAL ROW OF BOLT HOLES IN ANGLES (H) (I.E. THE 'WORKING POINT' OF THE BEAM). THIS WILL VERIFY PROPER ALIGNMENT OF THE BOLT HOLES IN THE COLUMN ASSEMBLY WITH THOSE IN THE BEAM ASSEMBLY, IRRESPECTIVE OF MILL TOLERANCES.
   h. TACK WELDING IN THE BEAM PROTECTED ZONE SHALL NOT BE PERMITTED. IF THIS SHOULD OCCUR, IT SHALL BE REPAIRED BY FOLLOWING AWS PROTOCOLS.
3. THE FOLLOWING FABRICATION AND SEPARATION MEASURES ARE IMPLEMENTED AND MAINTAINED THROUGH DELIVERY TO THE FIELD IN ORDER TO FACILITATE THE LOWERING INTO PLACE OF THE BEAM ASSEMBLY BETWEEN SIDE PLATES (A) OF OPPOSING COLUMN ASSEMBLIES.
   a. MAINTAIN, AS A MINIMUM, THE ACTUAL COLUMN FLANGE WIDTH ANYWHERE IN BETWEEN THE INTERIOR FACES OF SIDES PLATES (A) FROM TOP TO BOTTOM, TO ENSURE SUFFICIENT RATTLE SPACE UPON LOWERING THE BEAM ASSEMBLY INTO PLACE.
   b. THE DETAILED DISTANCE FROM EXTERIOR FACES OF ANGLES (H) ON THE BEAM ASSEMBLY SHALL BE CORRESPONDINGLY DIMENSIONED PER THE TABLE IN GRAPHIC NO. 4. THIS REDUCTION SHALL BE BASED ON THE FABRICATOR'S EXPERIENCE WITH THE TYPICAL MILL OVERRUNS IN THE COLUMN FLANGE WIDTH FOR THE COLUMN SECTIONS BEING USED. THE PROPER DETAILED DIMENSIONING OF THESE ANGLES (H) IS TO FACILITATE ERECTION CLEARANCE DURING THE LOWERING OF THE BEAM ASSEMBLY INTO PLACE.
      - IT IS IMPORTANT TO MAINTAIN SUFFICIENT EDGE DISTANCE BETWEEN THE LONGITUDINAL FACE OF THE BOTTOM ANGLES (H) WITH RESPECT TO ITS APEX AND RADIUS AND THE CORRESPONDING FLANGE TIP OF THE BEAM FOR PLACEMENT OF WELD (5), SEE GRAPHIC NO. 5.

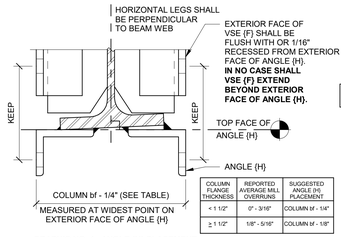

COLUMN FLANGE THICKNESS	REPORTED AVERAGE MILL OVERRUNS	SUGGESTED ANGLE (H) PLACEMENT
< 1 1/2"	0" - 3/16"	COLUMN bf - 1/4"
≥ 1 1/2"	1/8" - 5/16"	COLUMN bf - 1/8"

GRAPHIC NO. 4 - ANGLE (H) PLACEMENT

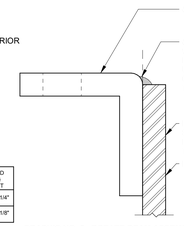

GRAPHIC NO. 5 - ROTATE BEAM ASSEMBLY TO FACILITATE WELD (5) MATERIAL AT MINIMAL EDGE DISTANCE

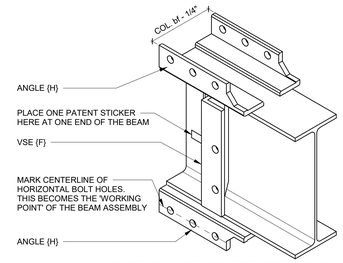

GRAPHIC NO. 6 - COMPLETED SIDE PLATE BOLTED BEAM END

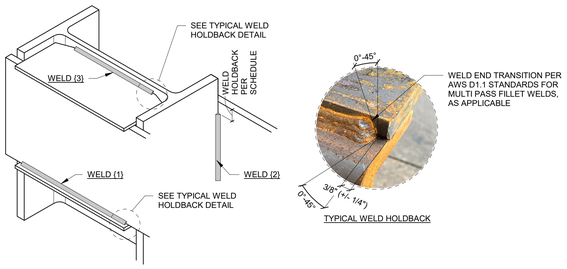

GRAPHIC NO. 7 - COLUMN ASSEMBLY WELD END PROFILES AND HOLDBACKS

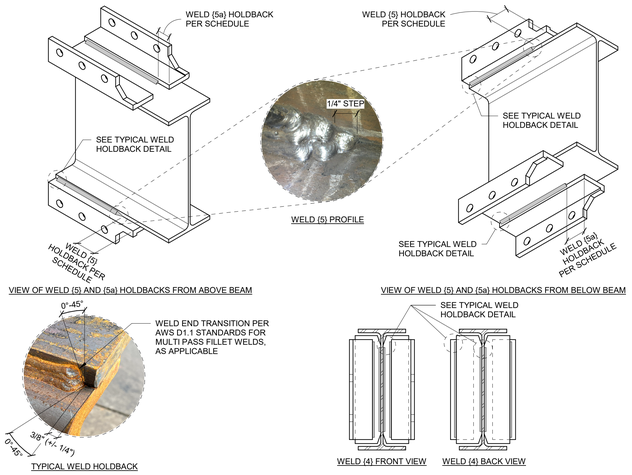

GRAPHIC NO. 8 - BEAM ASSEMBLY WELD END PROFILES AND HOLDBACKS

FIELD ERECTION OF SIDEPLATE BOLTED SYSTEM

1. LOWER THE BEAM ASSEMBLY INTO OPPOSING COLUMN ASSEMBLIES. SEE GRAPHIC NO. 9
   a. RACK BEAM SUCH THAT WEB IS PERPENDICULAR TO THE GROUND, FACILITATING MAXIMUM TOLERANCE WITHOUT THE BEAM BEING TILTED AS IT IS LOWERED DOWN BETWEEN THE SIDE PLATES (A), SEE GRAPHIC NO. 10.
   b. IF THE OPPOSING COLUMNS ARE SLIGHTLY SKEWED IN RELATION TO ONE ANOTHER, MAKING IT DIFFICULT TO LOWER THE BEAM DOWN BETWEEN THEM SIMULTANEOUSLY, THE BEAM ASSEMBLY CAN BE TILTED AND PLACED FIRST ON ONE COLUMN (LIKELY THE ONE WITH THE GREATEST TWIST). THEN A CHOKER ON THE OPPOSITE END OF THE BEAM CAN BE USED TO PULL IT OVER SO THAT IT IS IN ALIGNMENT ALLOWING THE FREE END OF THE BEAM TO BE DROPPED DOWN INTO PLACE. **IN NO CASE SHALL THE BEAM BE OVERDRAWN OR TWISTED SUCH THAT THE NON-PARALLEL COLUMNS' ERECTION AIDS FAIL.**
2. CAREFULLY REMOVE BOTTOM 'DOG' WHICH IS UNDER LOAD. IT IS RECOMMENDED THAT IT BE REMOVED BY TORCH CUTTING A 'V' SECTION OUT OF ONE OF THE ANGLE LEGS TO ALLEVIATE THE LOAD AND THEN PROCEED TO REMOVE IT. **IT IS NOT RECOMMENDED TO USE A GRINDING WHEEL TO REMOVE THE WELDS WHILE THE DOG IS UNDER LOAD!** BOTTOM 'DOG' ATTACHMENT WELD MAY REMAIN AND IS NOT NECESSARY TO BE GROUND FLUSH. BOTTOM DOGS SHALL BE REMOVED PRIOR TO PRETENSIONING SIDEPLATE BOLTS.
3. INSTALL BOLTS WHICH SERVE AS CLAMPING DEVICES TO 1) PULL SIDE PLATES (A) IN AS CLOSE AS PRACTICABLE TO THE ANGLES (H) OF THE BEAM ASSEMBLY AND 2) PULL ANGLES (G) ON COLUMN TREE ASSEMBLY AS CLOSE AS PRACTICABLE TO COVER PLATE (B). BOLTS SHALL BE SYSTEMATICALLY INSTALLED AS OUTLINED IN THE BOLTING SPECIFICATIONS, FIRST TO A SNUG TIGHT CONDITION AND THEN PRETENSIONED. PRIOR TO PRETENSIONING, THE DISTANCE BETWEEN FAYING SURFACES SHALL BE MEASURED. IF DISTANCE EQUALS 1/8 INCH OR LESS, NO FURTHER ACTION IS REQUIRED PRIOR TO PRETENSIONING. IF DISTANCE IS GREATER THAN 1/8 INCH UP TO 1/4 INCH, A SINGLE-PLY FINGER SHIM SHALL BE INSTALLED BETWEEN FAYING SURFACES PRIOR TO PRETENSIONING. FOR GAPS GREATER THAN 1/4 INCH, CONTACT SIDEPLATE FOR REMEDIAL MEASURES. WASHER IS REQUIRED UNDER THE NUT (AND IN SOME CASES UNDER THE HEAD OF HEAVY HEX). BOLTS SHALL BE INSTALLED AS SHOWN IN GRAPHIC NO. 11.
4. BOLT IN FIELD AS SHOWN IN GRAPHIC NO. 12 AND GRAPHIC NO. 13 TO COMPLETE ASSEMBLY.

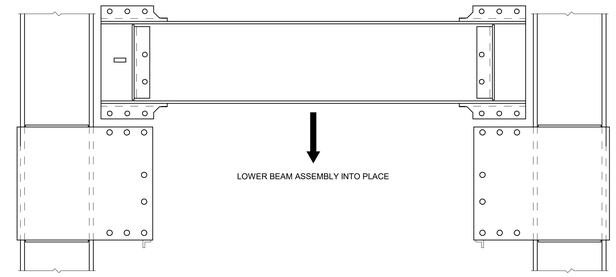

GRAPHIC NO. 9 - FIELD ERECTION OF SIDEPLATE BEAM ASSEMBLY

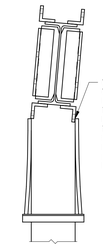

GRAPHIC NO. 10 - INCORRECTLY RACKED BEAM

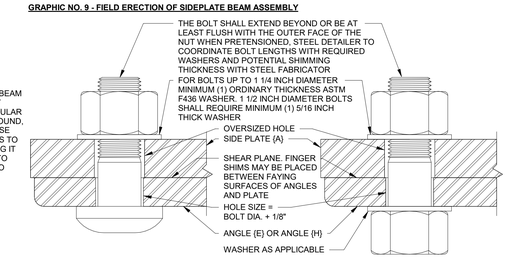

GRAPHIC NO. 11 - BOLTING DETAIL

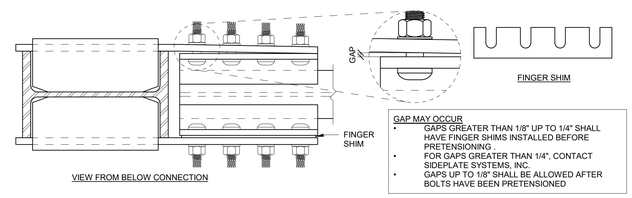

GAP MAY OCCUR
- GAPS GREATER THAN 1/8" UP TO 1/4" SHALL HAVE FINGER SHIMS INSTALLED BEFORE PRETENSIONING .
- FOR GAPS GREATER THAN 1/4", CONTACT SIDEPLATE SYSTEMS, INC.
- GAPS UP TO 1/8" SHALL BE ALLOWED AFTER BOLTS HAVE BEEN PRETENSIONED

GRAPHIC NO. 12 - CONDITION PRIOR TO TIGHTENING BOLTS

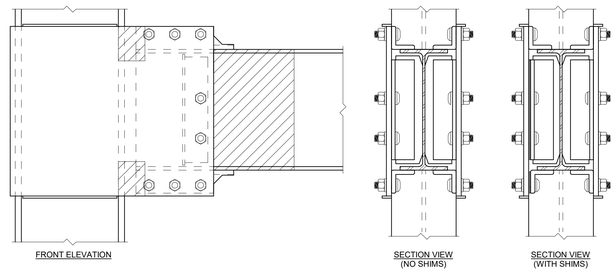

GRAPHIC NO. 13 - COMPLETED SIDEPLATE BOLTED CONNECTION

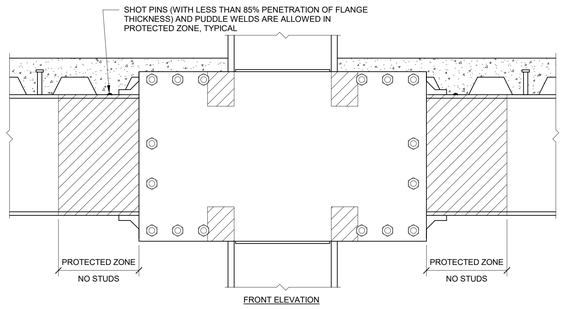

GRAPHIC NO. 14 - STUDS AND PUDDLE WELDS AT BEAM PROTECTED ZONE

SMF BOLTED

INTELLECTUAL PROPERTY RIGHTS NOTICE:
The SIDEPLATE® steel frame connection system is covered by U.S. Patent Nos. 6,138,427; 6,516,580; 6,591,573; 7,178,296; 8,122,671; 8,122,672; 8,146,322; 8,176,706; 8,209,408; and 9,091,085 and foreign counterparts. Other U.S. and foreign applications pending.

SIDEPLATE® is a registered trademark of MiTek Holdings, Inc., an affiliate of SidePlate Systems, Inc.

Copyright © 2026 SidePlate Systems, Inc. All rights reserved. Without limitation, this drawing and the information hereon may be used only following payment of a license fee to SidePlate Systems, Inc. and for the design, construction, operation, repair, maintenance, restoration or demolition of the building(s) specifically identified.

v17.32.06

© HKS, INC.

HKS

ARCHITECT
HKS ARCHITECTS, INC.
90 SOUTH 400 WEST, #110
SALT LAKE CITY, UTAH 84101

CON1-DISCIPLINE
CON1-COMPANY
CON1-ADDRESS1
CON1-ADDRESS2

CON2-DISCIPLINE
CON2-COMPANY
CON2-ADDRESS1
CON2-ADDRESS2

CON3-DISCIPLINE
CON3-COMPANY
CON3-ADDRESS1
CON3-ADDRESS2

CON4-DISCIPLINE
CON4-COMPANY
CON4-ADDRESS1
CON4-ADDRESS2

E/T ENGINEER
LYNK ENGINEERS
324 SOUTH STATE STREET, SUITE 400
SALT LAKE CITY, UTAH 84111

Intermountain Health

UTAH VALLEY SPORTS PERFORMANCE CENTER

PROJECT ADDRESS:

SEAL & SIGNATURE

KEY PLAN

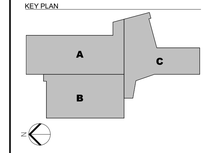

REVISION

NO.	DESCRIPTION	DATE

HKS PROJECT NUMBER
.000

DATE
08/24/26

ISSUE

SHEET TITLE
SIDEPLATE CONSTRUCTION GUIDELINES, NARROW

SHEET NO.
SF217

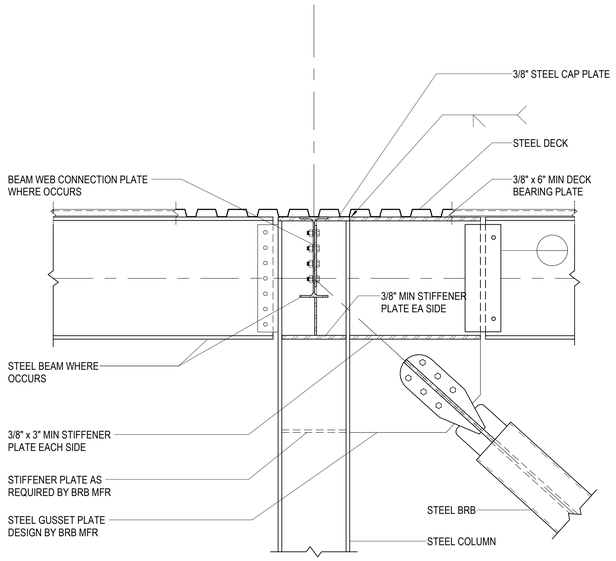

D1 / SF218 TYPICAL BUCKLING-RESTRAINED BRACE CONNECTION

NO SCALE

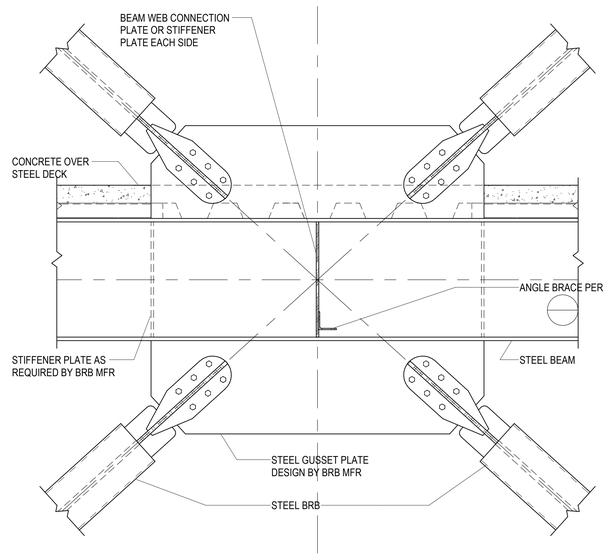

D2 / SF218 TYPICAL BUCKLING-RESTRAINED BRACE CONNECTION

NO SCALE

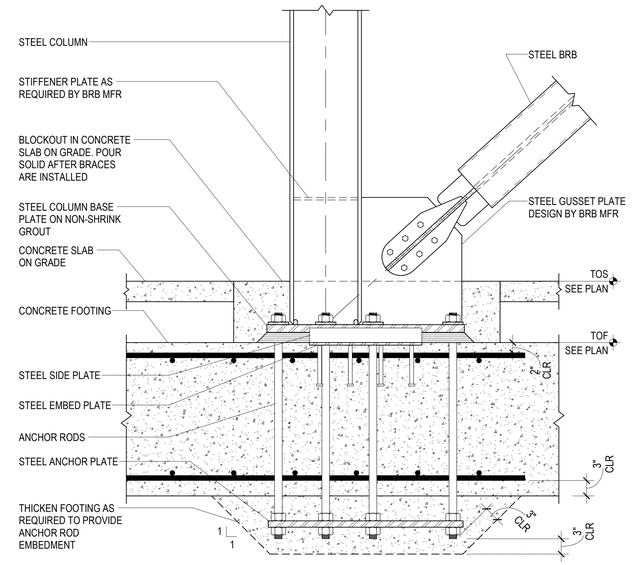

D4 / SF218 BRACED FRAME BASE CONNECTION DETAIL

NO SCALE

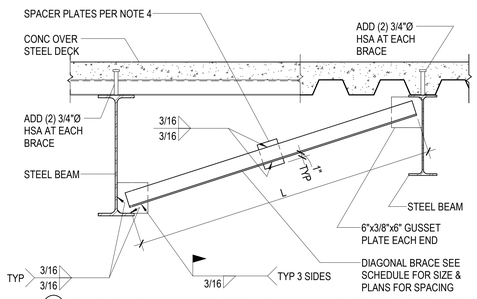

1 BRACE PERPENDICULAR TO STEEL BEAM AT CONCRETE OVER STEEL DECK

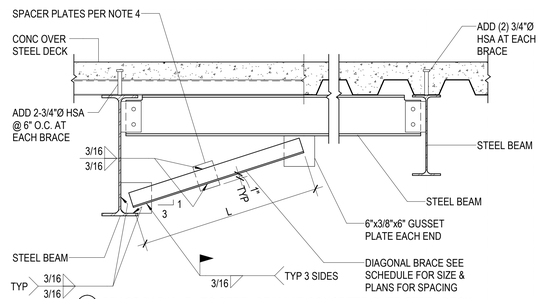

2 BRACE PARALLEL TO STEEL BEAM AT CONCRETE OVER STEEL DECK

DIAGONAL BRACE SCHEDULE			
BEAM SIZE	BRACE SIZE		MAX BRACE SPACING
	L ≤ 8'-0"	L ≤ 12'-0"	
--	--	--	'-_ _" O.C.

NOTES:

1. AT CONTRACTOR'S OPTION, BRACING ANGLES MAY BE ATTACHED TO GUSSET PLATES WITH (2) 7/8"Ø A325 PRETENSIONED BOLTS EACH END IN LIEU OF WELDING. PROVIDE A BOLT SPACING OF 3" AND A MINIMUM EDGE DISTANCE OF 2" IN THE DIAGONAL BRACE AND THE GUSSET PLATE. INCREASE THE GUSSET PLATE SIZE OR ADD GUSSET PLATES AS REQUIRED.
2. SLAB EDGE KICKERS SHALL ALIGN WITH LFRS BRACES, AND THE LFRS BRACE SIZE SHALL SUPERCEDE THE BACK SIDE BRACE SIZE SHOWN IN THE TYPICAL BRACED SLAB EDGE DETAILS.
3. ALL BOLTS AT STEEL BEAMS PARALLEL TO BRACES SHALL USE PRE-TENSIONED BOLTS
4. USE 3"x3/8" SPACER PLATES @ 32" O.C. MAX WHERE BRACE LENGTH ≤ 8'-0" OR 48" O.C. MAX WHERE BRACE LENGTH ≤ 12'-0"

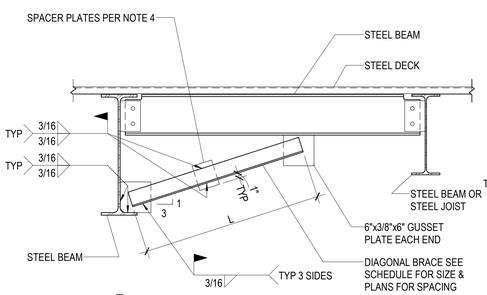

3 BRACE PARALLEL TO STEEL BEAM AT STEEL DECK

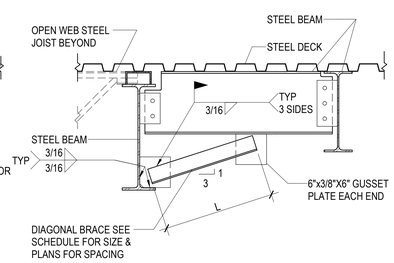

4 BRACE PARALLEL TO STEEL BEAM AT STEEL DECK AT DROPPED BEAM

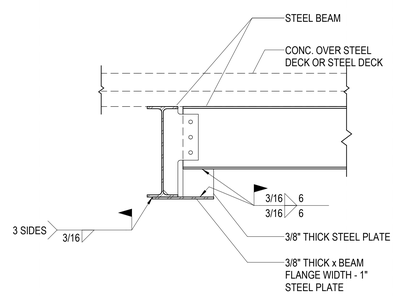

5 WHERE PURLIN DEPTH < 6" FROM BRACED BEAM

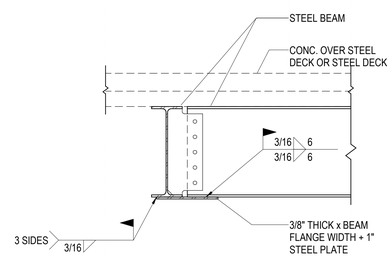

6 WHERE BEAM PURLINS ARE SAME DEPTH AS BRACED FRAME OR MOMENT FRAME BEAM

A1 / SF218 TYPICAL LATERAL FORCE RESISTING SYSTEM BEAM DIAGONAL BRACE DETAILS & SCHEDULE

NO SCALE

HKS

ARCHITECT
HKS ARCHITECTS, INC.
90 SOUTH 400 WEST, #110
SALT LAKE CITY, UTAH 84101

CIVIL ENGINEER
GREAT BASIN ENGINEERING, INC
5746 SOUTH 1475 EAST
OGDEN, UTAH 84403

LANDSCAPE ARCHITECT
MGB+A STUDIO
145 WEST 200 SOUTH
SALT LAKE CITY, UTAH 84101

STRUCTURAL ENGINEER
REAVELEY ENGINEERS
250 EAST 200 SOUTH, SUITE 1000
SALT LAKE CITY, UTAH 84111

M/P/FP ENGINEER
RESOLUT GROUP
181 EAST 5600 SOUTH, SUITE 200
MURRAY, UTAH 84107

E/T ENGINEER
LYNK ENGINEERS
324 SOUTH STATE STREET, SUITE 400
SALT LAKE CITY, UTAH 84111

Intermountain Health

UTAH VALLEY SPORTS PERFORMANCE CENTER

PROJECT ADDRESS: WEST 880 NORTH 200 WEST PROVO, UTAH 84604

SEAL & SIGNATURE

KEY PLAN

REVISION

NO.	DESCRIPTION	DATE

HKS PROJECT NUMBER
27487.000

DATE
08/26/2026

ISSUE
DESIGN DEVELOPMENT

SHEET TITLE
BRACED FRAME DETAILS

SHEET NO.
SF218

© HKS, INC.

TITLE BLOCK VERSION: 20210820
MODEL: Autodesk Docs://27487.000_IH_UV Sports Performance Center_2025/S IH-UV Sports Performance Center_2025.rvt
TEMPLATE VERSION:
PRINT DATE: 8/26/2026 5:19:59 PM

BRACED FRAME COLUMN BASE PLATE SCHEDULE

MARK	BASE PLATE						ANCHOR RODS				ANCHOR PLATE THICKNESS	SIDE PLATE		EMBED PLATE		
	TYPE	N LENGTH	B WIDTH	THICKNESS	A DIM	C DIM	TOTAL NUMBER	DIAMETER	EMBED DEPTH	GRADE		DIMENSIONS	WELD SIZE	L LENGTH	W WIDTH	THICKNESS
A	--	--	--	--	--	--	--	--	--	--	--	--	--	--	--	--

NOTES:
1. ALL STEEL BASE PLATES, ANCHOR PLATES AND EMBED PLATES SHALL BE ASTM A572 GRADE 50, U.N.O.
2. ANCHOR RODS SHALL BE ASTM F1554 WITH GRADE AS INDICATED IN SCHEDULE.
3. ANCHOR PLATE DIMENSIONS SHALL MATCH THE BASE PLATE DIMENSIONS AND TYPE.
4. SEE C5/SF219 FOR STEEL EMBED PLATE.
5. SEE D5/SF219 FOR STEEL WELD PLATE CONNECTION.

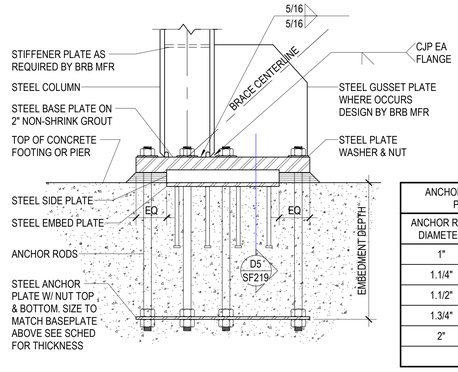

ANCHOR ROD HOLE SIZES AND MINIMUM PLATE WASHER DIMENSION		
ANCHOR ROD DIAMETER	MAX HOLE DIAMETER	PLATE WASHER
1"	1.13/16"	3"x3/8"x3"
1.1/4"	2.1/16"	3"x1/2"x3"
1.1/2"	2.5/16"	3.1/2"x1/2"x3.1/2"
1.3/4"	2.3/4"	4"x5/8"x4"
2"	3.1/4"	5"x3/4"x5"

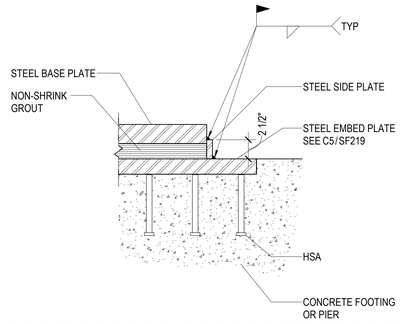

D5 / SF219 TYPICAL WELD PLATE DETAIL
NO SCALE

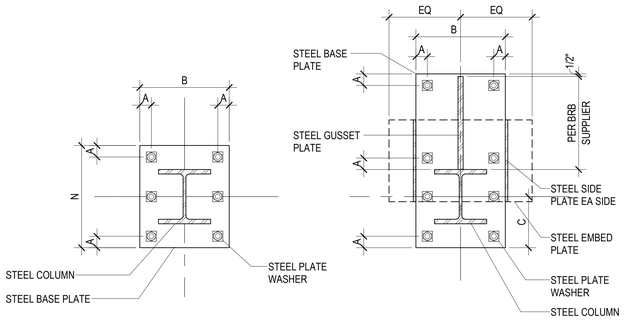

C1 / SF219 TYPICAL BRACED FRAME BASE PLATE SCHEDULE AND DETAILS
NO SCALE

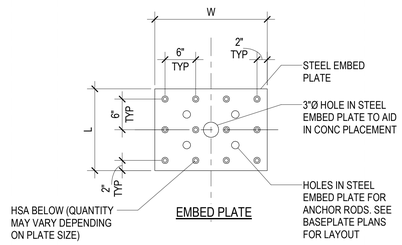

C5 / SF219 STEEL EMBED PLATE (PLAN VIEW)
NO SCALE

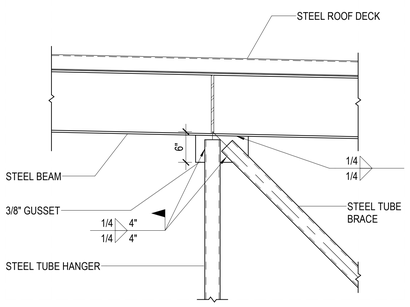

B1 / SF219 BRACED FRAME DETAIL
NO SCALE

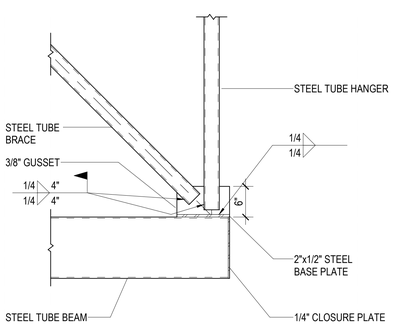

A1 / SF219 BRACED FRAME DETAIL
NO SCALE

AREA MARKED AS PROTECTED ZONE SHALL COMPLY WITH THE FOLLOWING REQUIREMENTS:

1. WITHIN THE PROTECTED ZONE, DISCONTINUITIES CREATED BY FABRICATION OR ERECTION OPERATIONS, SUCH AS TACK WELDS, ERECTION AIDS, AIR-ARC GOUGING AND THERMAL CUTTING SHALL BE REPAIRED. REPAIR METHOD SHALL BE APPROVED BY THE ENGINEER OF RECORD.

2. WELDING, BOLTING, SCREWING OR SHOT IN ATTACHMENTS FOR PARTITIONS, DUCT WORK, PIPING OR OTHER CONSTRUCTION SHALL NOT BE PLACED WITHIN THE PROTECTED ZONE.

3.THE PROTECTED ZONE SHALL INCLUDE THE STEEL CORE AND ELEMENTS THAT CONNECT THE STEEL CORE TO BEAMS AND COLUMNS. IF THE MANUFACTURER PROVIDES A SLEEVE, THE PROTECTED ZONE SHALL EXTEND 3" BEYOND THE SLEEVE.

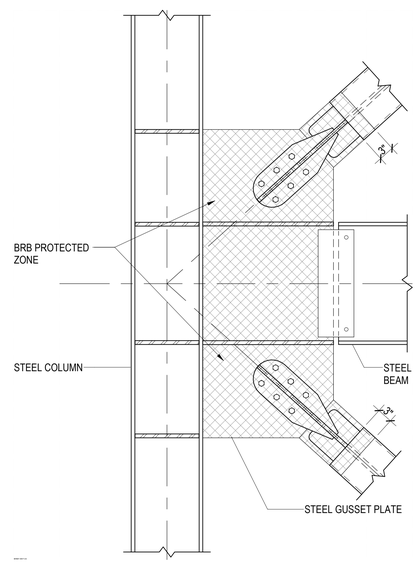

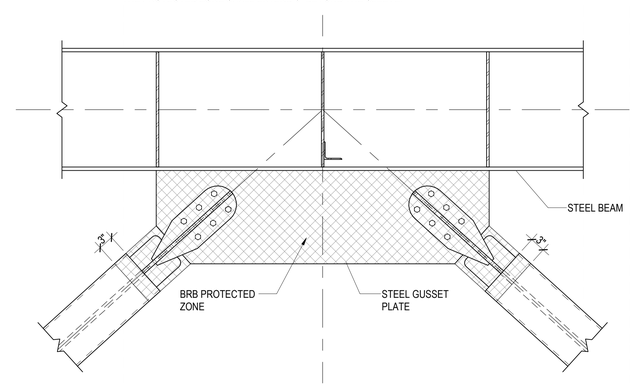

A5 / SF219 PROTECTED ZONES FOR BUCKLING-RESTRAINED BRACED FRAMES
SCALE: 1" = 1'-0"

© HKS, INC.

HKS

ARCHITECT
HKS ARCHITECTS, INC.
90 SOUTH 400 WEST, #110
SALT LAKE CITY, UTAH 84101

CIVIL ENGINEER
GREAT BASIN ENGINEERING, INC
5746 SOUTH 1475 EAST
OGDEN, UTAH 84403

LANDSCAPE ARCHITECT
MGB+A STUDIO
145 WEST 200 SOUTH
SALT LAKE CITY, UTAH 84101

STRUCTURAL ENGINEER
REAVELEY ENGINEERS
250 EAST 200 SOUTH, SUITE 1000
SALT LAKE CITY, UTAH 84111

M/P/FP ENGINEER
RESOLUT GROUP
181 EAST 5600 SOUTH, SUITE 200
MURRAY, UTAH 84107

E/T ENGINEER
LYNK ENGINEERS
324 SOUTH STATE STREET, SUITE 400
SALT LAKE CITY, UTAH 84111

Intermountain Health

UTAH VALLEY SPORTS PERFORMANCE CENTER

PROJECT ADDRESS: WEST 880 NORTH 200 WEST PROVO, UTAH 84604

SEAL & SIGNATURE

KEY PLAN

REVISION

NO.	DESCRIPTION	DATE

HKS PROJECT NUMBER
27487.000

DATE
08/26/2026

ISSUE
DESIGN DEVELOPMENT

SHEET TITLE
BRACED FRAME DETAILS

SHEET NO.
SF219

TITLE BLOCK VERSION: 20210930
MODEL: Autodesk Docs://27487.000_IH - UV Sports Performance Center 2025/S_IH-UV_Sports-Performance-Center_2025.rvt
PRINT DATE: 8/26/2026 5:19:59 PM TEMPLATE VERSION:

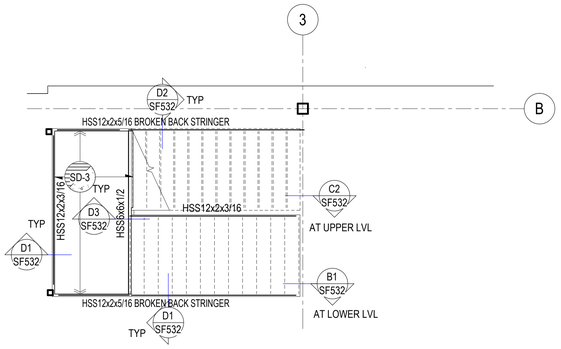

D1 / SF401 North Stair Landing - LEVEL 1.5

SCALE: 1/4" = 1'-0"

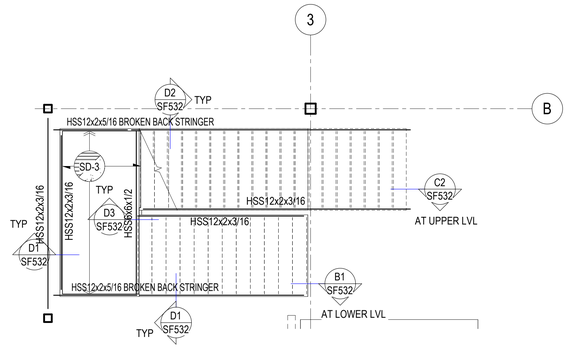

2 / SF401 North Stair Landing - LEVEL 2.5

SCALE: 1/4" = 1'-0"

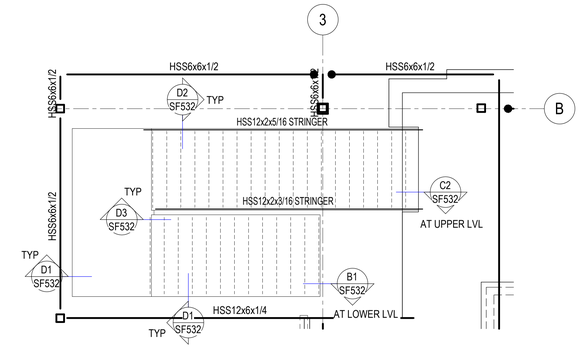

3 / SF401 North Stair Landing - LEVEL 3.5

SCALE: 1/4" = 1'-0"

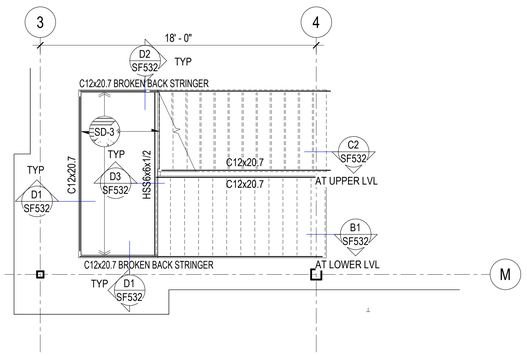

D3 / SF401 South Stair Landing - LEVEL 1.5

SCALE: 1/4" = 1'-0"

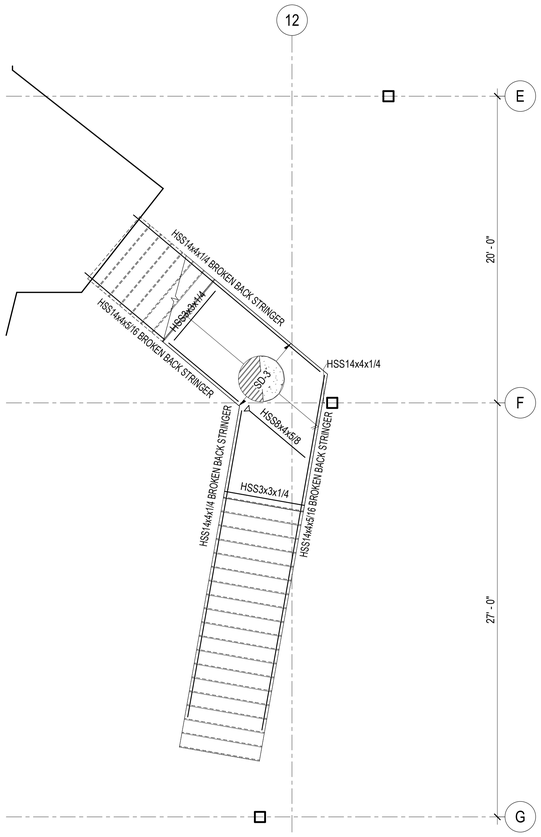

1 / SF401 East Stair Landing - LEVEL 1.5

SCALE: 1/4" = 1'-0"

PLAN NOTES

1. ALL HORIZONTAL REBAR IN SLABS AND AT TOP OF WALL SHALL BE EPOXY COATED
2. STEEL BEAMS AND EMBEDS SHALL BE GALVANIZED (G60)

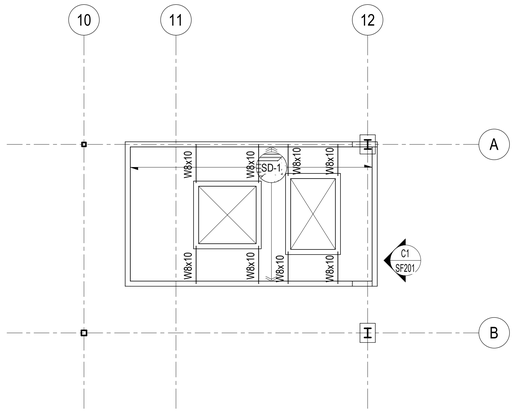

A5 / SF401 LEVEL 01 FRAMING PLAN

SCALE: 1/8" = 1'-0"

HKS

ARCHITECT
HKS ARCHITECTS, INC.
90 SOUTH 400 WEST, #110
SALT LAKE CITY, UTAH 84101

CIVIL ENGINEER
GREAT BASIN ENGINEERING, INC
5746 SOUTH 1475 EAST
OGDEN, UTAH 84403

LANDSCAPE ARCHITECT
MGB+A STUDIO
145 WEST 200 SOUTH
SALT LAKE CITY, UTAH 84101

STRUCTURAL ENGINEER
REAVELEY ENGINEERS
250 EAST 200 SOUTH, SUITE 1000
SALT LAKE CITY, UTAH 84111

M/P/FP ENGINEER
RESOLUT GROUP
181 EAST 5600 SOUTH, SUITE 200
MURRAY, UTAH 84107

E/T ENGINEER
LYNK ENGINEERS
324 SOUTH STATE STREET, SUITE 400
SALT LAKE CITY, UTAH 84111

Intermountain Health

UTAH VALLEY SPORTS PERFORMANCE CENTER

PROJECT ADDRESS: WEST 880 NORTH 200 WEST PROVO, UTAH 84604

SEAL & SIGNATURE

KEY PLAN

REVISION

NO.	DESCRIPTION	DATE

HKS PROJECT NUMBER
27487.000

DATE
08/26/2026

ISSUE
DESIGN DEVELOPMENT

SHEET TITLE
ENLARGED STAIR FRAMING PLANS

SHEET NO.
SF401

© HKS, INC.

TITLE BLOCK VERSION: 20210930
MODEL: Autodesk Docs://27487.000_IH - UV Sports Performance Center_2025/S_IH-UV_Sports-Performance-Center_2025.rvt
PRINT DATE: 8/26/2025 5:20:01 PM TEMPLATE VERSION:

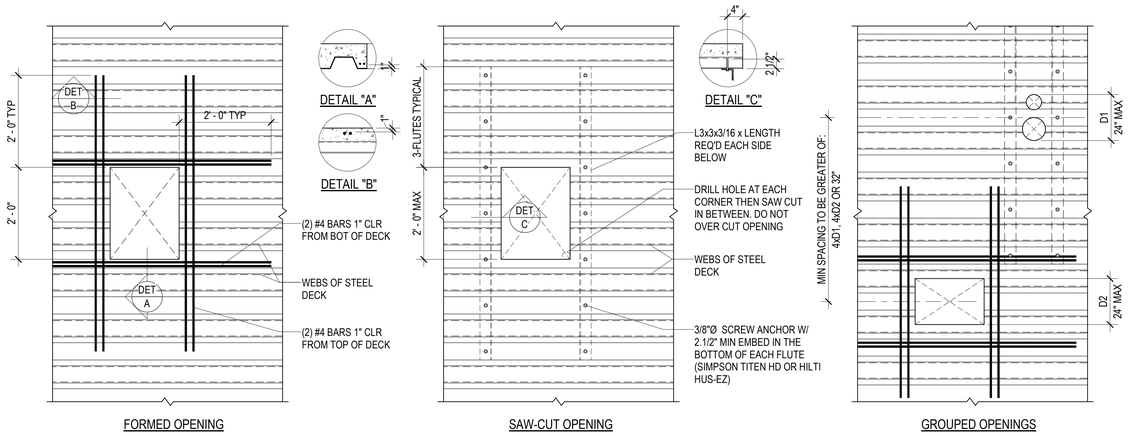

NOTES:
1. UNREINFORCED OPENINGS
   A. OPENINGS UP TO 6"Ø DO NOT REQUIRE REINFORCING PROVIDED THEY ARE NOT SPACED LESS THAN 32" O.C.
2. FORMED OPENINGS
   A. LEAVE METAL DECK INTACT. PLACE REBAR & FORM OPENING. REMOVE METAL DECK ONCE CONCRETE REACHES 2500psi
3. SAW-CUT OPENINGS
   A. SHIM GAPS BETWEEN ANGLE AND BOTTOM FLUTE.
   B. INSTALL ANCHORS PER ICC REPORT.
4. GROUPED OPENINGS
   A. OPENINGS SPACED CLOSER THAN THE MIN SPACING SHALL BE REINFORCED AS A SINGLE OPENING.
   B. THE SIZE OF OPENINGS MEASURED PARALLEL TO THE DECK FLUTES IS NOT LIMITED.
5. OPENINGS LARGER THAN ALLOWED ON THESE DETAILS REQUIRE A FRAME. CONTACT ENGINEER IF FRAME IS NOT PROVIDED ON THE PLAN.

D1 / SF501 — TYPICAL MISCELLANEOUS FLOOR OPENING (UP TO 24") REINFORCING DETAIL FOR COMPOSITE STEEL DECK
NO SCALE

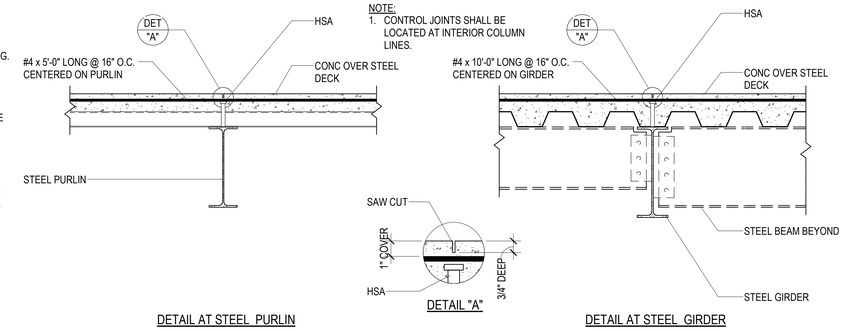

D4 / SF501 — TYPICAL COMPOSITE DECK CONTROL JOINTS
NO SCALE

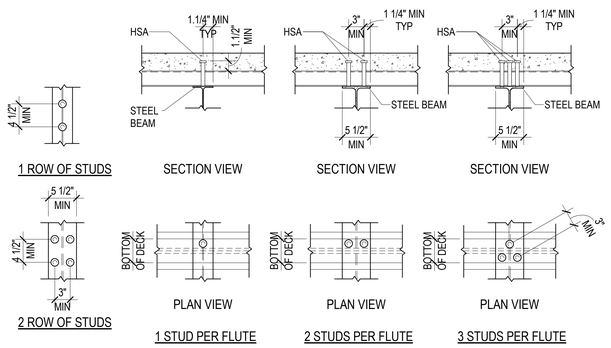

C1 / SF501 — TYPICAL STUD PLACEMENT DIAGRAMS
NO SCALE

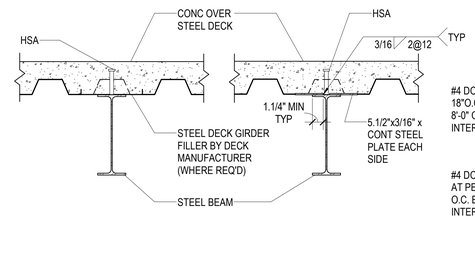

C2 / SF501 — TYPICAL COMPOSITE DECK BEARING DETAIL AT STEEL BEAM (DECK GIRDER FILLER)
NO SCALE

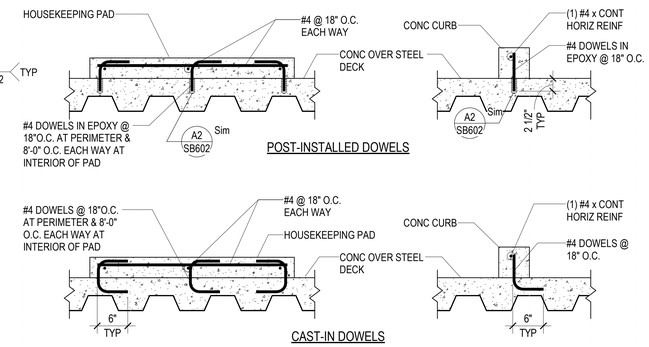

C4 / SF501 — TYPICAL HOUSEKEEPING PAD & CURB DETAILS AT CONCRETE OVER STEEL DECK
NO SCALE

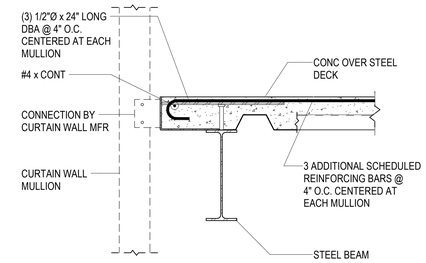

NOTE:
1. COORDINATE ADDITIONAL REINFORCEMENT AND MULLION LOCATIONS WITH CURTAIN WALL SUBCONTRACTOR DRAWINGS.

C5 / SF501 — TYPICAL DECK EDGE REINFORCEMENT AT CURTAIN WALL MULLIONS
NO SCALE

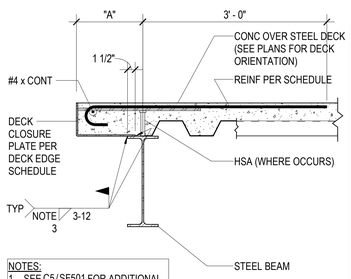

NOTES:
1. SEE C5/SF501 FOR ADDITIONAL DBA'S AND REINFORCING REQUIRED AT CURTAIN WALL MULLIONS.

TYPICAL SLAB EDGE DETAIL

DECK EDGE SCHEDULE			
"A"	DECK CLOSURE PLATE		REINFORCING
	THICKNESS	ANCHORS	
0" TO 6"	3/16"	1/2" Ø x 18" LONG DBA @ 24" O.C.	NONE
UP TO 12"	3/16"	1/2" Ø x 24" LONG DBA @ 24" O.C.	#4 @ 12" O.C.
UP TO 15"	1/4"	1/2" Ø x 24" LONG DBA @ 24" O.C.	#4 @ 12" O.C.
UP TO 18"	5/16"	1/2" Ø x 24" LONG DBA @ 24" O.C.	#4 @ 10" O.C.
UP TO 20"	3/8"	1/2" Ø x 24" LONG DBA @ 24" O.C.	#4 @ 8" O.C.
OVER 20"	USE BRACED SLAB EDGE DETAILS		

NOTES:
1. CONTRACTOR SHALL VERIFY ALL DECK EDGE DIMENSIONS WITH ARCH. DRAWINGS PRIOR TO DETAILING AND FABRICATION OF CLOSURE PLATES.
2. COORDINATE CLOSURE PLATES WITH EMBED BLOCKOUTS OR INSERTS THAT ARE REQ'D TO SUPPORT CLADDING, ELEVATOR RAILS & SILLS ETC.
3. CLOSURE PLATE WELD THICKNESS SHALL BE THE PLATE THICKNESS MINUS 1/16" (3/16" MIN)

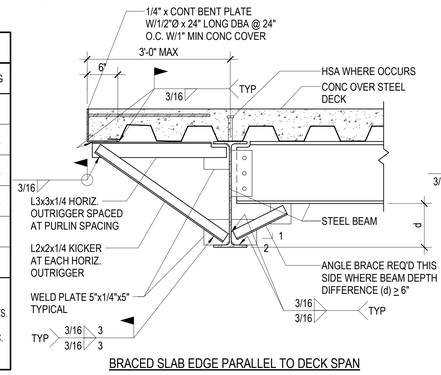

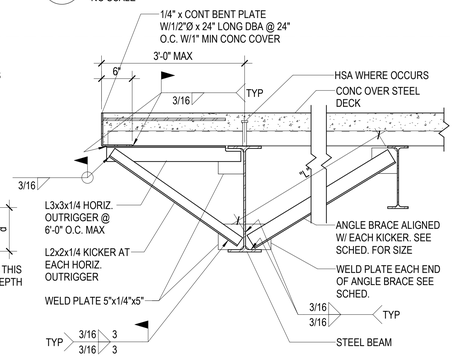

ANGLE BRACE SCHEDULE		
BRACE LENGTH "L"	ANGLE BRACE SIZE	WELD PLATE SIZE
UP TO 4'-0"	L2x2x1/4	4"x1/4"x4"
4'-0" TO 8'-0"	L3x3x1/4	4"x1/4"x4"
8'-0" TO 12'-0"	(2) L2.1/2x2.1/2x1/4	4"x3/8"x4"
OVER 12'-0"	(2) L3x3x1/4	5"x3/8"x5"

NOTE:
1. WHERE DOUBLE ANGLES ARE USED PROVIDE 3"x3/8" SPACER PLATES AT THIRD POINTS.

C2 / SF501 — TYPICAL COMPOSITE DECK BEARING DETAIL AT STEEL BEAM (DECK GIRDER FILLER)
NO SCALE

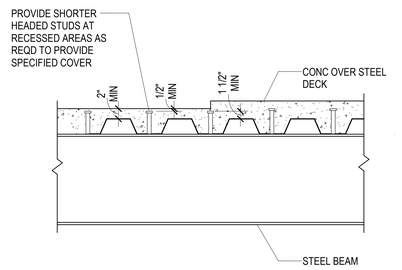

C5 / SF501 — TYPICAL DECK EDGE REINFORCEMENT AT CURTAIN WALL MULLIONS
NO SCALE

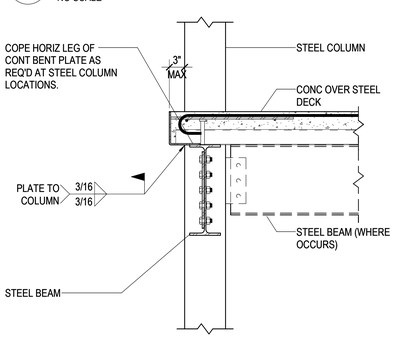

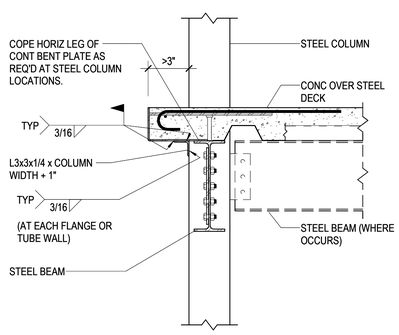

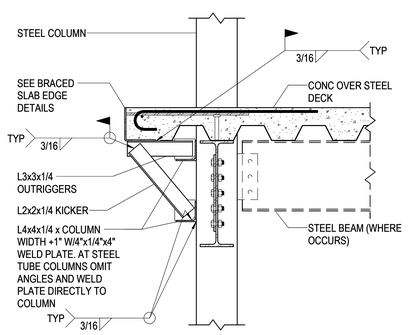

B1 / SF501 — TYPICAL CONCRETE OVER STEEL DECK SLAB EDGE DETAILS AT STEEL BEAMS
NO SCALE

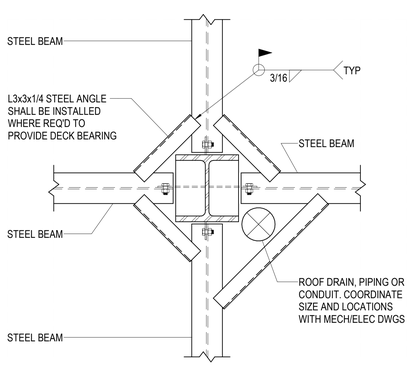

A1 / SF501 — TYPICAL CONCRETE OVER STEEL DECK SLAB EDGE DETAILS AT STEEL COLUMNS
NO SCALE

A4 / SF501 — TYPICAL DECK BEARING AT STEEL COLUMN (PLAN VIEW)
NO SCALE

B5 / SF501 — TYPICAL COMPOSITE STEEL BEAM AT SLAB RECESS
NO SCALE

HKS

ARCHITECT
HKS ARCHITECTS, INC.
90 SOUTH 400 WEST, #110
SALT LAKE CITY, UTAH 84101

CIVIL ENGINEER
GREAT BASIN ENGINEERING, INC
5746 SOUTH 1475 EAST
OGDEN, UTAH 84403

LANDSCAPE ARCHITECT
MGB+A STUDIO
145 WEST 200 SOUTH
SALT LAKE CITY, UTAH 84101

STRUCTURAL ENGINEER
REAVELEY ENGINEERS
250 EAST 200 SOUTH, SUITE 1000
SALT LAKE CITY, UTAH 84111

M/P/FP ENGINEER
RESOLUT GROUP
181 EAST 5600 SOUTH, SUITE 200
MURRAY, UTAH 84107

E/T ENGINEER
LYNK ENGINEERS
324 SOUTH STATE STREET, SUITE 400
SALT LAKE CITY, UTAH 84111

Intermountain Health

UTAH VALLEY SPORTS PERFORMANCE CENTER

PROJECT ADDRESS: WEST 880 NORTH 200 WEST PROVO, UTAH 84604

SEAL & SIGNATURE

KEY PLAN

REVISION

NO.	DESCRIPTION	DATE

HKS PROJECT NUMBER
27487.000
DATE
08/26/2026
ISSUE
DESIGN DEVELOPMENT

SHEET TITLE
TYPICAL CONCRETE OVER STEEL DECK DETAILS
SHEET NO.
SF501

© HKS, INC.

TITLE BLOCK VERSION: 20210930
PRINT DATE: 8/26/2026 5:20:02 PM TEMPLATE VERSION:
MODEL: Autodesk Docs://27487.000_HI - UV Sports Performance Center_2025/S_HI-UV_Sports Performance Center_2025.rvt

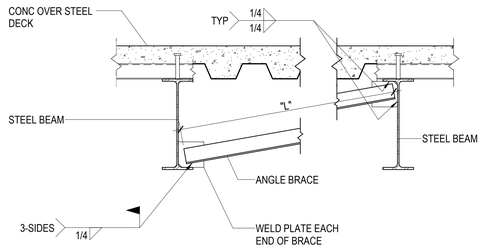

ANGLE BRACE SCHEDULE		
BRACE LENGTH "L"	ANGLE BRACE SIZE	WELD PLATE SIZE
UP TO 4'-0"	L2x2x1/4	4"x1/4"x4"
4'-0" TO 8'-0"	L3x3x1/4	4"x1/4"x4"
8'-0" TO 12'-0"	(2) L2.1/2x2.1/2x1/4	4"x3/8"x4"
12'-0" TO 16'-0"	(2) L3x3x1/4	5"x3/8"x5"

NOTE:
1. WHERE DOUBLE ANGLES ARE USED PROVIDE 3"x3/8" SPACER PLATES AT THIRD POINTS.

D1 / SF502 TYPICAL STEEL BEAM BOTTOM FLANGE BRACE DETAIL

NO SCALE

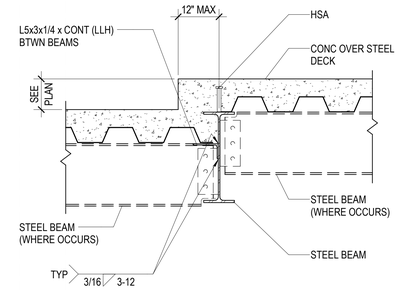

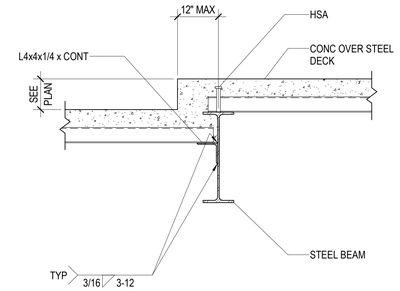

D3 / SF502 TYPICAL DETAIL AT STEP IN COMPOSITE FLOOR DECK

NO SCALE

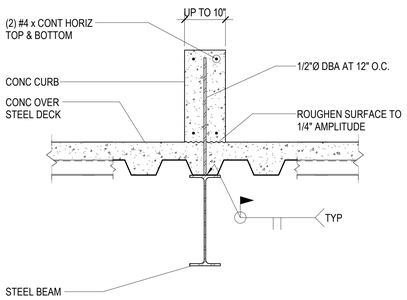

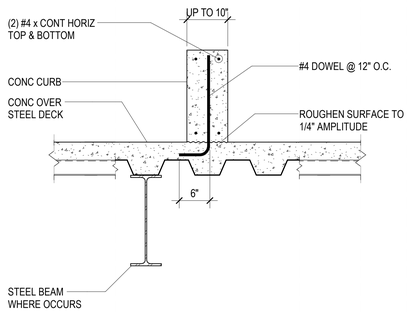

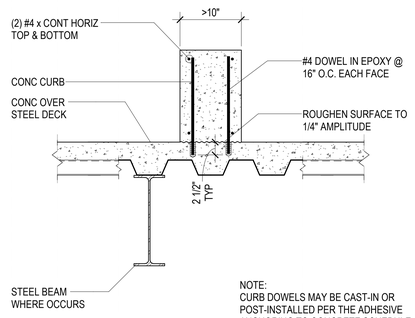

NOTE:
CURB DOWELS MAY BE CAST-IN OR POST-INSTALLED PER THE ADHESIVE ANCHORING TO CONCRETE SCHEDULE

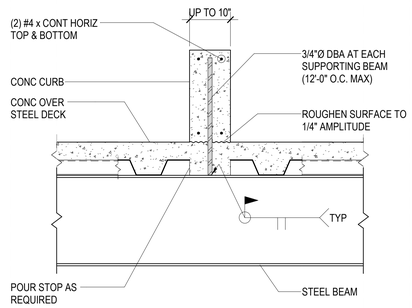

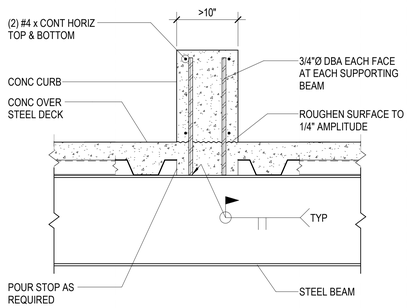

C1 / SF502 TYPICAL CONCRETE CURB WALL ON COMPOSITE FRAMING

NO SCALE

© HKS, INC.

HKS

ARCHITECT
HKS ARCHITECTS, INC.
90 SOUTH 400 WEST, #110
SALT LAKE CITY, UTAH 84101

CIVIL ENGINEER
GREAT BASIN ENGINEERING, INC
5746 SOUTH 1475 EAST
OGDEN, UTAH 84403

LANDSCAPE ARCHITECT
MGB+A STUDIO
145 WEST 200 SOUTH
SALT LAKE CITY, UTAH 84101

STRUCTURAL ENGINEER
REAVELEY ENGINEERS
250 EAST 200 SOUTH, SUITE 1000
SALT LAKE CITY, UTAH 84111

M/P/FP ENGINEER
RESOLUT GROUP
181 EAST 5600 SOUTH, SUITE 200
MURRAY, UTAH 84107

E/T ENGINEER
LYNK ENGINEERS
324 SOUTH STATE STREET, SUITE 400
SALT LAKE CITY, UTAH 84111

Intermountain Health

UTAH VALLEY SPORTS PERFORMANCE CENTER

PROJECT ADDRESS: WEST 880 NORTH 200 WEST PROVO, UTAH 84604

SEAL & SIGNATURE

KEY PLAN

REVISION

NO.	DESCRIPTION	DATE

HKS PROJECT NUMBER
27487.000

DATE
08/26/2026

ISSUE
DESIGN DEVELOPMENT

SHEET TITLE
TYPICAL FLOOR FRAMING DETAILS

SHEET NO.
SF502

TITLE BLOCK VERSION: 20210930
MODEL: Autodesk Docs://27487.000_IH-UV Sports Performance Center_2025/S_IH-UV_Sports-Performance-Center_2025.rvt
PRINT DATE: 8/26/2026 5:26:03 PM TEMPLATE VERSION:

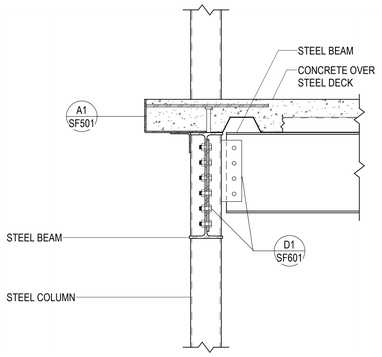

D1 SF503 STEEL BEAM CONNECTION TO STEEL COLUMN
NO SCALE

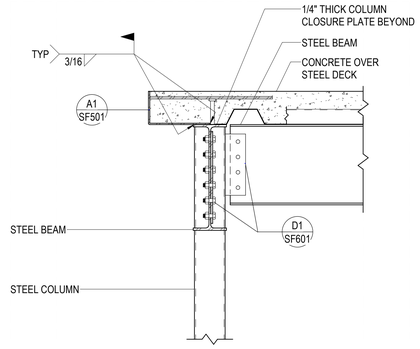

D2 SF503 STEEL BEAM CONNECTION TO STEEL COLUMN
NO SCALE

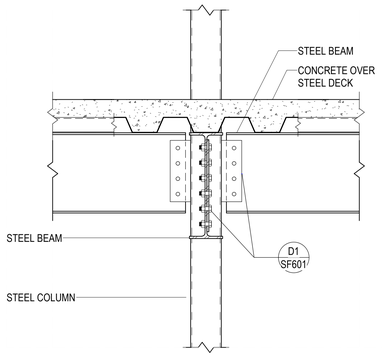

C1 SF503 STEEL BEAM CONNECTION TO STEEL COLUMN
NO SCALE

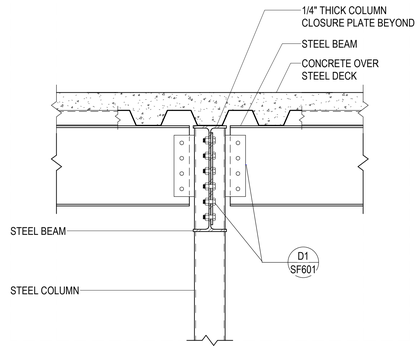

C2 SF503 STEEL BEAM CONNECTION TO STEEL COLUMN
NO SCALE

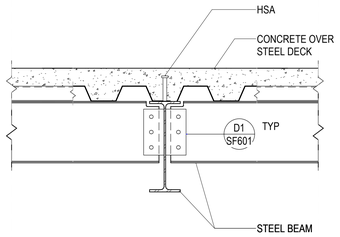

C4 SF503 TYPICAL COMPOSITE STEEL BEAM W/ STEEL BEAM TWO SIDES
NO SCALE

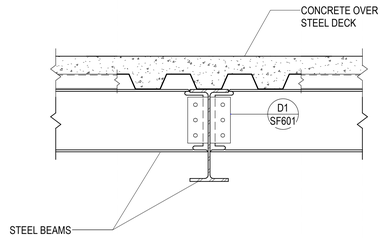

C5 SF503 STEEL BEAM TO BEAM MOMENT CONNECTION
NO SCALE

HKS

ARCHITECT
HKS ARCHITECTS, INC.
90 SOUTH 400 WEST, #110
SALT LAKE CITY, UTAH 84101

CIVIL ENGINEER
GREAT BASIN ENGINEERING, INC
5746 SOUTH 1475 EAST
OGDEN, UTAH 84403

LANDSCAPE ARCHITECT
MGB+A STUDIO
145 WEST 200 SOUTH
SALT LAKE CITY, UTAH 84101

STRUCTURAL ENGINEER
REAVELEY ENGINEERS
250 EAST 200 SOUTH, SUITE 1000
SALT LAKE CITY, UTAH 84111

M/P/FP ENGINEER
RESOLUT GROUP
181 EAST 5600 SOUTH, SUITE 200
MURRAY, UTAH 84107

E/T ENGINEER
LYNK ENGINEERS
324 SOUTH STATE STREET, SUITE 400
SALT LAKE CITY, UTAH 84111

Intermountain Health

UTAH VALLEY SPORTS PERFORMANCE CENTER

PROJECT ADDRESS: WEST 880 NORTH 200 WEST PROVO, UTAH 84604

SEAL & SIGNATURE

KEY PLAN

REVISION

NO.	DESCRIPTION	DATE

HKS PROJECT NUMBER
27487.000

DATE
08/26/2026

ISSUE
DESIGN DEVELOPMENT

SHEET TITLE
FLOOR FRAMING DETAILS

SHEET NO.
SF503

© HKS, INC.

TITLE BLOCK VERSION: 20210930
MODEL: Autodesk Docs://27487.000_IH-UV Sports Performance Center 2025/S_IH-UV_Sports-Performance-Center_2025.rvt
PRINT DATE: 8/26/2026 5:26:03 PM TEMPLATE VERSION:

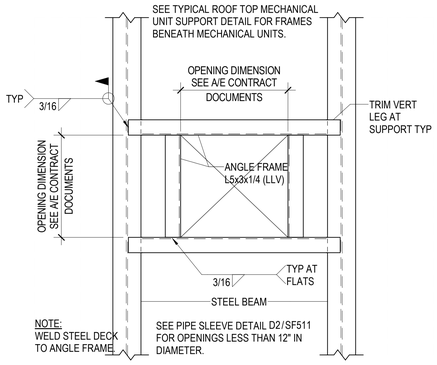

D1 / SF511 TYPICAL ROOF OPENING DETAIL (PLAN VIEW)

NO SCALE

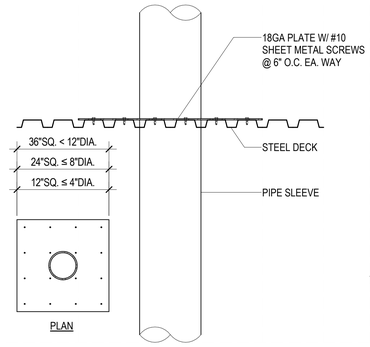

D2 / SF511 TYPICAL PIPE SLEEVE HOLE THRU ROOF DECK

NO SCALE

WHERE THE MECHANICAL UNIT WEIGHS LESS THAN 600#, THE L6x4x5/16 SUPPORT ANGLES MAY CHANGED TO L5x3x1/4 (LLV).
SOLID BLOCK THE FLUTES OF THE STEEL DECK BENEATH THE CURB OF THE MECHANICAL UNIT. THIS MAY BE DONE WITH A HSS1.1/2x1.1/2x1/4 x6" LONG TACK WELDED TO THE STEEL DECK OR WITH SOLID BLOCKING CONNECTED TO THE STEEL DECK.

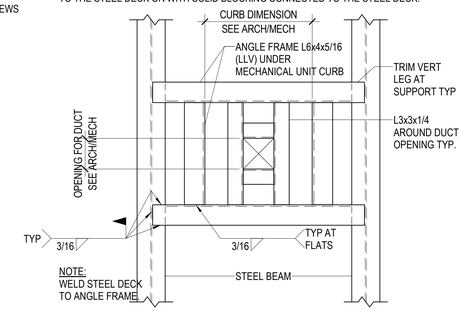

D3 / SF511 TYP ROOF TOP MECHANICAL UNIT SUPPORT DETAIL (PLAN VIEW)

NO SCALE

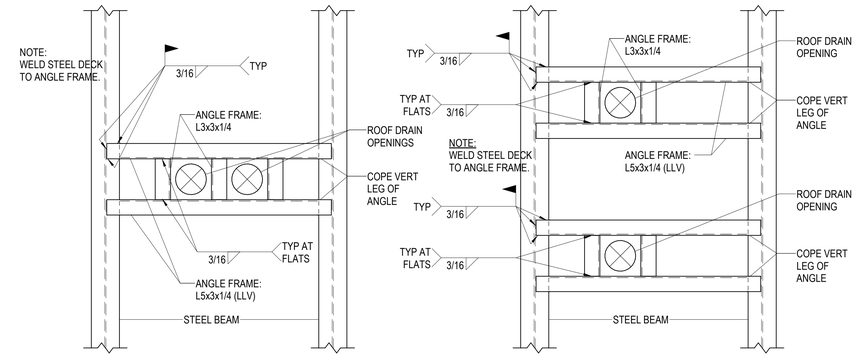

D4 / SF511 TYPICAL ROOF DRAIN OPENING (PLAN VIEW)

NO SCALE

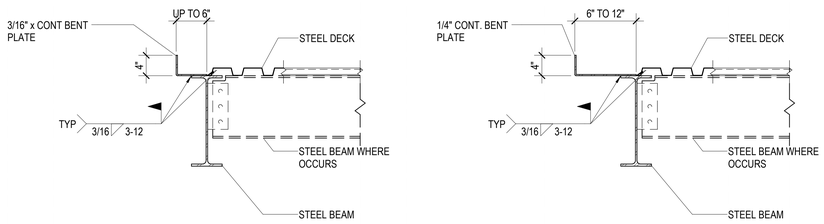

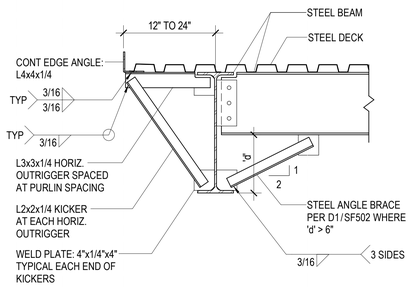

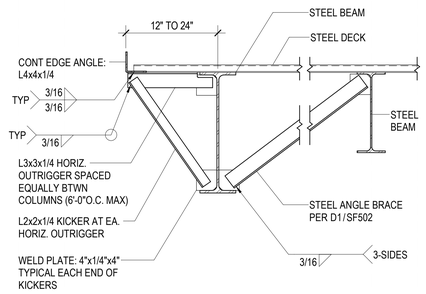

C1 / SF511 TYPICAL ROOF EDGE DETAILS AT STEEL BEAMS

NO SCALE

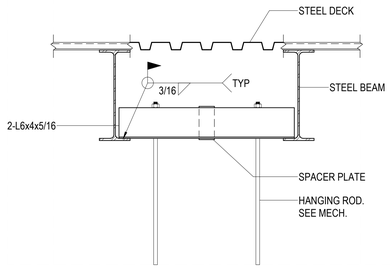

C5 / SF511 TYPICAL HANGING MECHANICAL UNIT SUPPORT DETAIL

NO SCALE

HKS

ARCHITECT
HKS ARCHITECTS, INC.
90 SOUTH 400 WEST, #110
SALT LAKE CITY, UTAH 84101

CIVIL ENGINEER
GREAT BASIN ENGINEERING, INC
5746 SOUTH 1475 EAST
OGDEN, UTAH 84403

LANDSCAPE ARCHITECT
MGB+A STUDIO
145 WEST 200 SOUTH
SALT LAKE CITY, UTAH 84101

STRUCTURAL ENGINEER
REAVELEY ENGINEERS
250 EAST 200 SOUTH, SUITE 1000
SALT LAKE CITY, UTAH 84111

M/P/FP ENGINEER
RESOLUT GROUP
181 EAST 5600 SOUTH, SUITE 200
MURRAY, UTAH 84107

E/T ENGINEER
LYNK ENGINEERS
324 SOUTH STATE STREET, SUITE 400
SALT LAKE CITY, UTAH 84111

Intermountain Health

UTAH VALLEY SPORTS PERFORMANCE CENTER

PROJECT ADDRESS: WEST 880 NORTH 200 WEST PROVO, UTAH 84604

SEAL & SIGNATURE

KEY PLAN

REVISION

NO.	DESCRIPTION	DATE

HKS PROJECT NUMBER
27487.000

DATE
08/26/2026

ISSUE
DESIGN DEVELOPMENT

SHEET TITLE
TYPICAL ROOF FRAMING DETAILS

SHEET NO.
SF511

© HKS, INC.

TITLE BLOCK VERSION: 20210930
MODEL: Autodesk Docs://27487.000_IH-UV Sports Performance Center 2025/S_IH-UV_Sports-Performance-Center_2025.rvt
PRINT DATE: 8/26/2026 5:20:04 PM TEMPLATE VERSION:

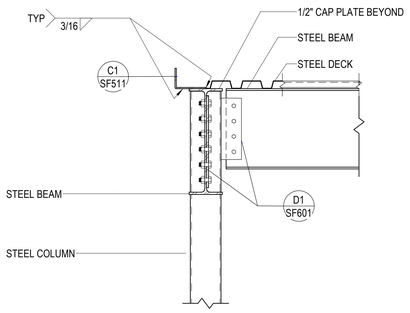

D1 SF513 STEEL BEAM CONNECTION TO STEEL COLUMN

NO SCALE

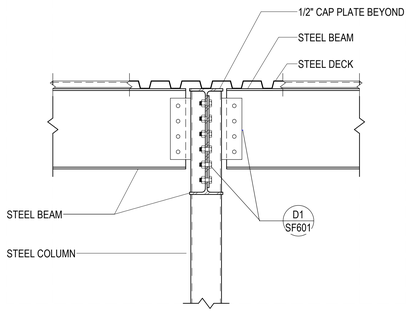

D2 SF513 STEEL BEAM CONNECTION TO STEEL COLUMN

NO SCALE

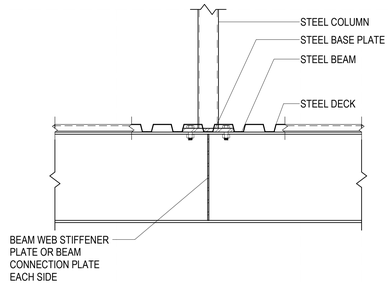

D3 SF513 STEEL BEAM W/ STEEL COLUMN ABOVE

NO SCALE

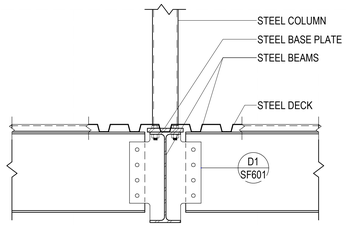

D4 SF513 STEEL BEAM W/ STEEL COLUMN ABOVE

NO SCALE

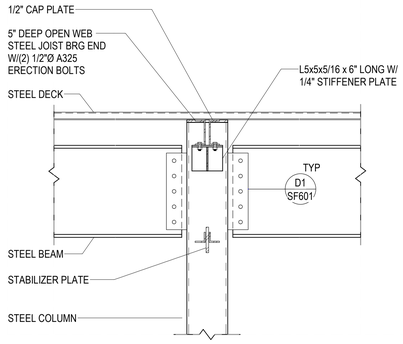

D5 SF513 TYPICAL STEEL JOIST/BEAM BEARING AT STEEL COLUMN

NO SCALE

HKS

ARCHITECT
HKS ARCHITECTS, INC.
90 SOUTH 400 WEST, #110
SALT LAKE CITY, UTAH 84101

CIVIL ENGINEER
GREAT BASIN ENGINEERING, INC
5746 SOUTH 1475 EAST
OGDEN, UTAH 84403

LANDSCAPE ARCHITECT
MGB+A STUDIO
145 WEST 200 SOUTH
SALT LAKE CITY, UTAH 84101

STRUCTURAL ENGINEER
REAVELEY ENGINEERS
250 EAST 200 SOUTH, SUITE 1000
SALT LAKE CITY, UTAH 84111

M/P/FP ENGINEER
RESOLUT GROUP
181 EAST 5600 SOUTH, SUITE 200
MURRAY, UTAH 84107

E/T ENGINEER
LYNK ENGINEERS
324 SOUTH STATE STREET, SUITE 400
SALT LAKE CITY, UTAH 84111

Intermountain Health

UTAH VALLEY SPORTS PERFORMANCE CENTER

PROJECT ADDRESS: WEST 880 NORTH 200 WEST PROVO, UTAH 84604

SEAL & SIGNATURE

KEY PLAN

REVISION

NO.	DESCRIPTION	DATE

HKS PROJECT NUMBER
27487.000

DATE
08/26/2026

ISSUE

SHEET TITLE
ROOF FRAMING DETAILS

SHEET NO.
SF513

© HKS, INC.

TITLE BLOCK VERSION: 20210930
MODEL: Autodesk Docs://27487.000_IH-UV Sports Performance Center 2025/S_IH-UV_Sports-Performance-Center_2025.rvt
PRINT DATE: 8/26/2026 5:20:04 PM TEMPLATE VERSION:

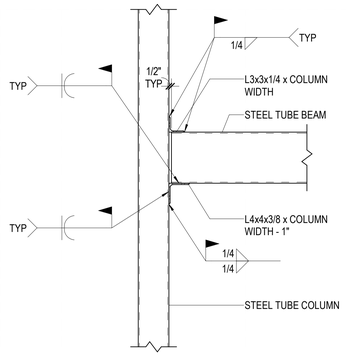

D1 / SF514 TYPICAL STEEL TUBE CONNECTION
NO SCALE

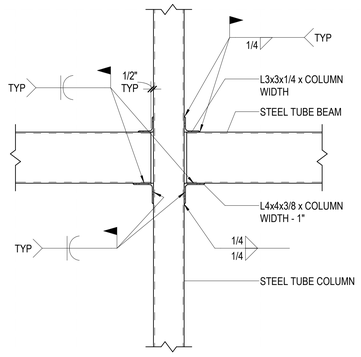

D2 / SF514 TYPICAL STEEL TUBE CONNECTION
NO SCALE

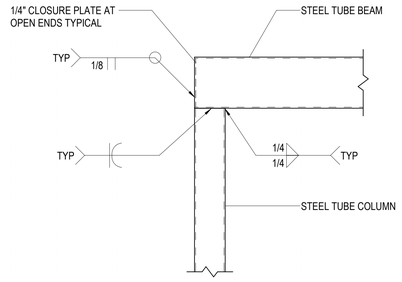

D3 / SF514 TYPICAL STEEL TUBE CONNECTION
NO SCALE

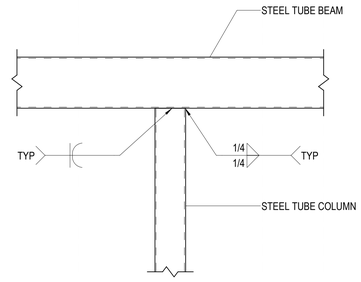

D4 / SF514 TYPICAL STEEL TUBE CONNECTION
NO SCALE

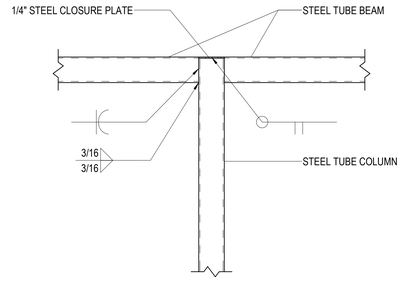

D5 / SF514 STEEL TUBE CONNECTION AT SCREEN WALL
NO SCALE

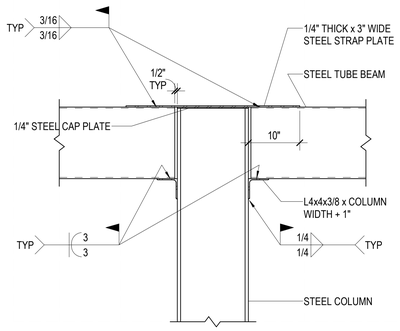

C1 / SF514 TYPICAL STEEL TUBE CONNECTION
NO SCALE

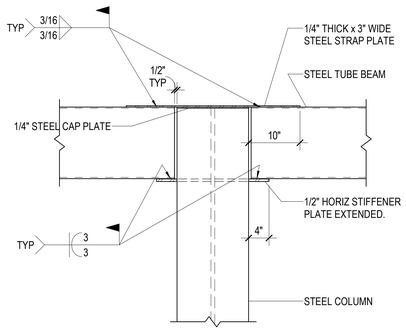

C2 / SF514 TYPICAL STEEL TUBE CONNECTION
NO SCALE

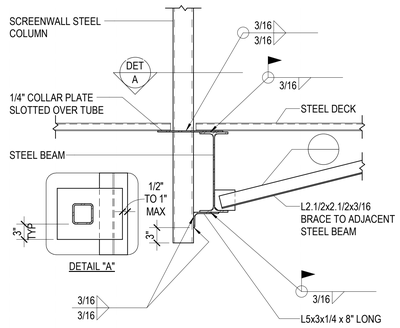

C3 / SF514 SCREEN WALL CONNECTION DETAIL
NO SCALE

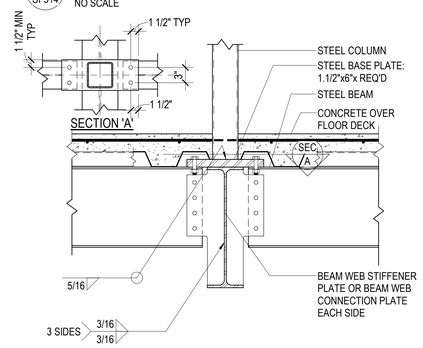

C5 / SF514 SCREEN WALL COLUMN BEARING ON STEEL BEAMS
NO SCALE

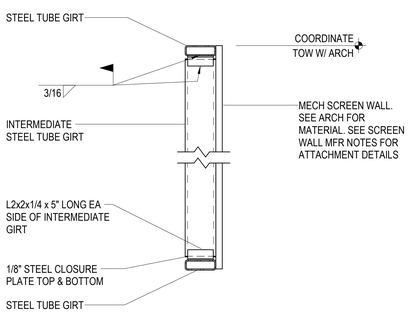

B1 / SF514 INTERMEDIATE SCREEN WALL GIRT CONNECTION
NO SCALE

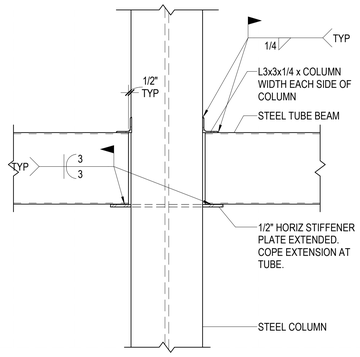

B2 / SF514 TYPICAL STEEL TUBE CONNECTION
NO SCALE

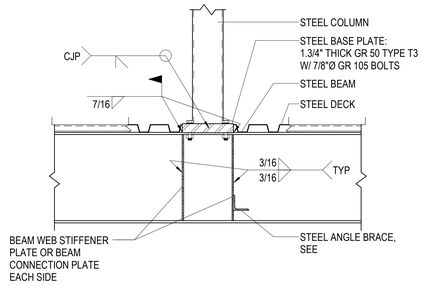

B3 / SF514 STEEL BEAM W/ STEEL SCREEN WALL COLUMN ABOVE
NO SCALE

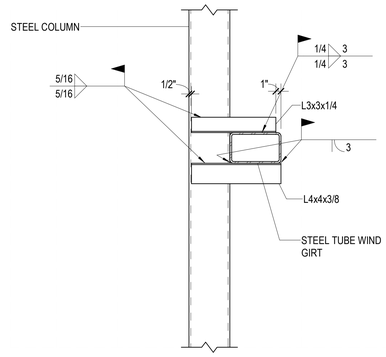

B4 / SF514 TYPICAL STEEL TUBE WIND GIRT CONNECTION
NO SCALE

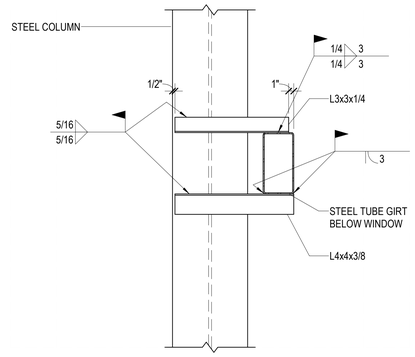

B5 / SF514 TYPICAL STEEL TUBE WIND GIRT CONNECTION
NO SCALE

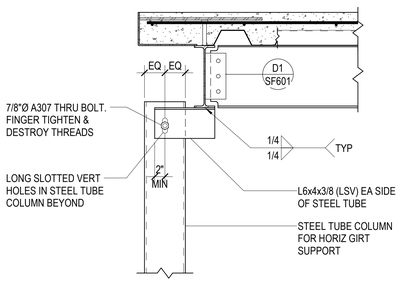

A1 / SF514 TYPICAL WIND GIRT COLUMN CONNECTION AT FLOOR
NO SCALE

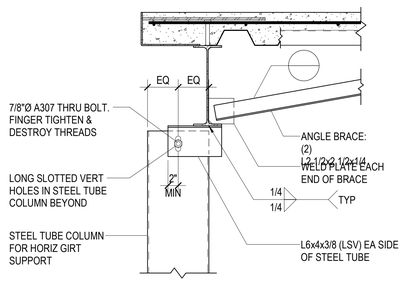

A2 / SF514 TYPICAL WIND GIRT COLUMN CONNECTION AT FLOOR
NO SCALE

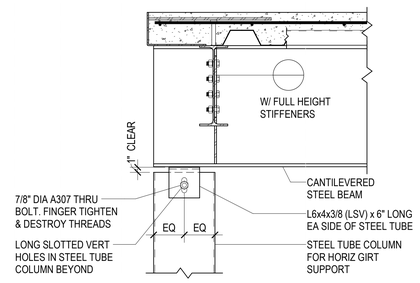

A3 / SF514 TYPICAL WIND GIRT COLUMN CONNECTION AT FLOOR
NO SCALE

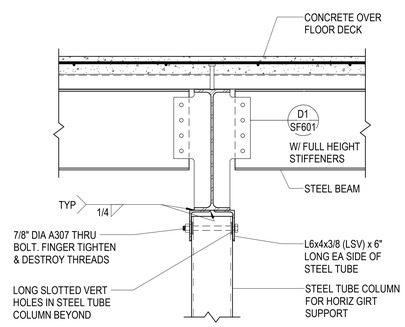

A4 / SF514 TYPICAL WIND GIRT COLUMN CONNECTION AT FLOOR
NO SCALE

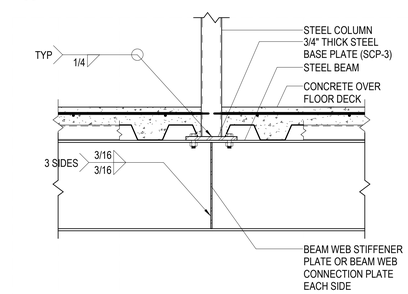

A5 / SF514 SCREEN WALL COLUMN BEARING ON STEEL BEAM
NO SCALE

© HKS, INC.

HKS

ARCHITECT
HKS ARCHITECTS, INC.
90 SOUTH 400 WEST, #110
SALT LAKE CITY, UTAH 84101

CIVIL ENGINEER
GREAT BASIN ENGINEERING, INC
5746 SOUTH 1475 EAST
OGDEN, UTAH 84403

LANDSCAPE ARCHITECT
MGB+A STUDIO
145 WEST 200 SOUTH
SALT LAKE CITY, UTAH 84101

STRUCTURAL ENGINEER
REAVELEY ENGINEERS
250 EAST 200 SOUTH, SUITE 1000
SALT LAKE CITY, UTAH 84111

M/P/FP ENGINEER
RESOLUT GROUP
181 EAST 5600 SOUTH, SUITE 200
MURRAY, UTAH 84107

E/T ENGINEER
LYNK ENGINEERS
324 SOUTH STATE STREET, SUITE 400
SALT LAKE CITY, UTAH 84111

Intermountain Health

UTAH VALLEY SPORTS PERFORMANCE CENTER

PROJECT ADDRESS: WEST 880 NORTH 200 WEST PROVO, UTAH 84604

SEAL & SIGNATURE

KEY PLAN

REVISION

NO.	DESCRIPTION	DATE

HKS PROJECT NUMBER
27487.000

DATE
08/26/2026

ISSUE
DESIGN DEVELOPMENT

SHEET TITLE
TYPICAL STEEL TUBE FRAMING DETAILS

SHEET NO.
SF514

TITLE BLOCK VERSION: 20210930
MODEL: Autodesk Docs://27487.000_IH - UV Sports Performance Center_2025/S_IH-UV_Sports Performance Center_2025.rvt
PRINT DATE: 8/26/2026 5:20:06 PM TEMPLATE VERSION:

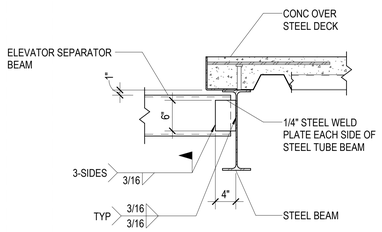

D1 / SF531 TYPICAL DETAIL AT ELEVATOR SEPARATOR STEEL BEAM

NO SCALE

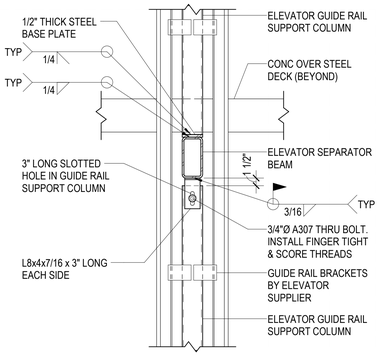

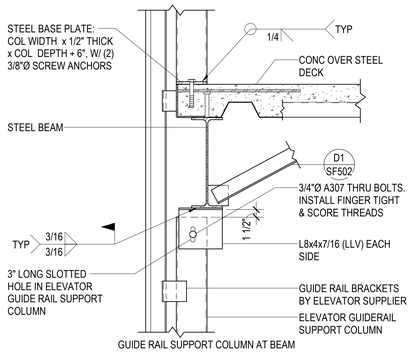

GUIDE RAIL SUPPORT COLUMN AT BEAM

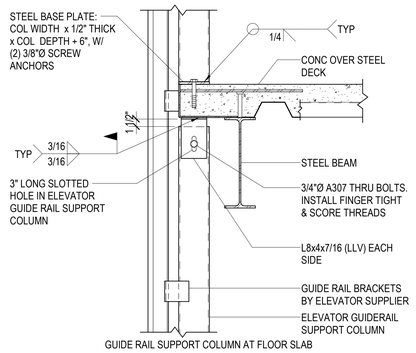

GUIDE RAIL SUPPORT COLUMN AT FLOOR SLAB

D3 / SF531 TYPICAL ELEVATOR GUIDE RAIL SUPPORT COLUMN CONNECTIONS

NO SCALE

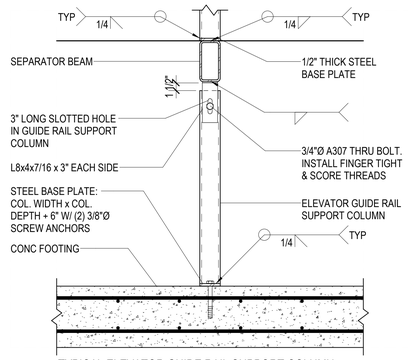

D5 / SF531 TYPICAL ELEVATOR GUIDE RAIL SUPPORT COLUMN BEARING ON CONCRETE FOOTING

NO SCALE

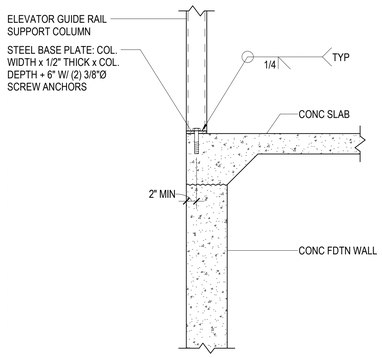

C1 / SF531 TYPICAL ELEVATOR GUIDE RAIL SUPPORT COLUMN BEARING ON CONCRETE

NO SCALE

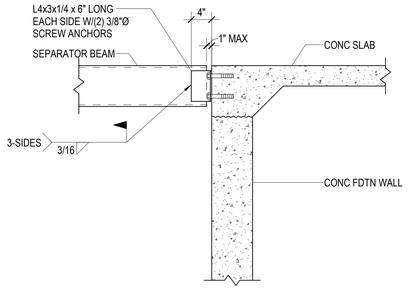

C2 / SF531 TYPICAL ELEVATOR SEPARATOR BEAM CONNECTION TO CONCRETE

NO SCALE

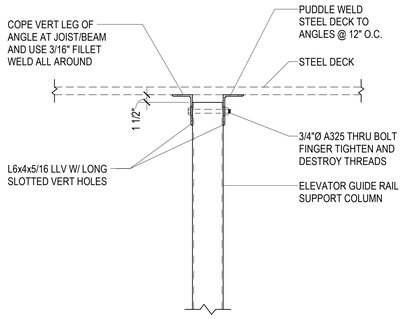

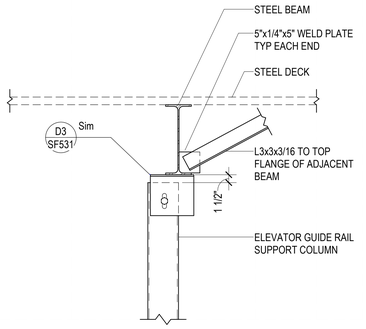

C3 / SF531 TYPICAL ELEVATOR GUIDE RAIL SUPPORT COLUMN BRACING AT TOP

NO SCALE

© HKS, INC.

HKS

ARCHITECT
HKS ARCHITECTS, INC.
90 SOUTH 400 WEST, #110
SALT LAKE CITY, UTAH 84101

CIVIL ENGINEER
GREAT BASIN ENGINEERING, INC
5746 SOUTH 1475 EAST
OGDEN, UTAH 84403

LANDSCAPE ARCHITECT
MGB+A STUDIO
145 WEST 200 SOUTH
SALT LAKE CITY, UTAH 84101

STRUCTURAL ENGINEER
REAVELEY ENGINEERS
250 EAST 200 SOUTH, SUITE 1000
SALT LAKE CITY, UTAH 84111

M/P/FP ENGINEER
RESOLUT GROUP
181 EAST 5600 SOUTH, SUITE 200
MURRAY, UTAH 84107

E/T ENGINEER
LYNK ENGINEERS
324 SOUTH STATE STREET, SUITE 400
SALT LAKE CITY, UTAH 84111

Intermountain Health

UTAH VALLEY SPORTS PERFORMANCE CENTER

PROJECT ADDRESS: WEST 880 NORTH 200 WEST PROVO, UTAH 84604

SEAL & SIGNATURE

KEY PLAN

REVISION

NO.	DESCRIPTION	DATE

HKS PROJECT NUMBER
27487.000

DATE
08/26/2026

ISSUE
DESIGN DEVELOPMENT

SHEET TITLE
TYPICAL ELEVATOR SUPPORT DETAILS

SHEET NO.
SF531

TITLE BLOCK VERSION: 20210930
MODEL: Autodesk Docs://27487.000_IH-UV Sports Performance Center 2025/S_IH-UV_Sports-Performance-Center_2025.rvt
PRINT DATE: 8/26/2026 5:29:07 PM TEMPLATE VERSION:

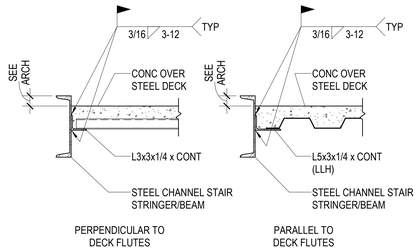

D1 / SF532 TYPICAL STAIR DETAIL
NO SCALE

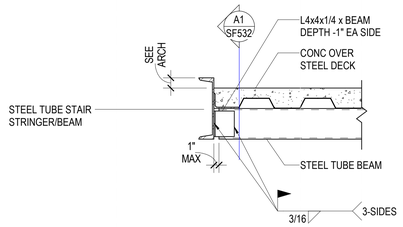

D2 / SF532 TYPICAL STAIR DETAIL
NO SCALE

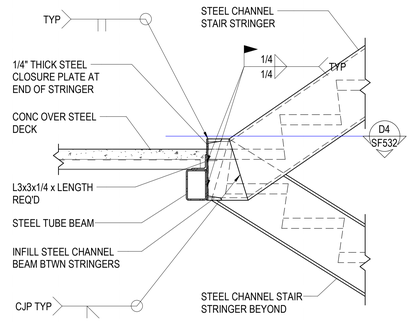

D3 / SF532 TYPICAL STAIR DETAIL
NO SCALE

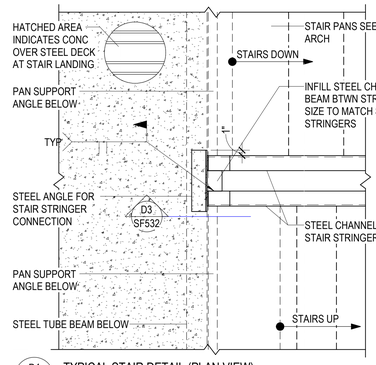

D4 / SF532 TYPICAL STAIR DETAIL (PLAN VIEW)
NO SCALE

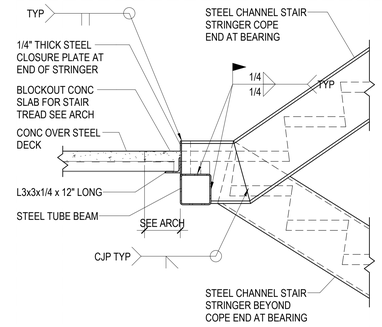

D5 / SF532 TYPICAL STAIR DETAIL
NO SCALE

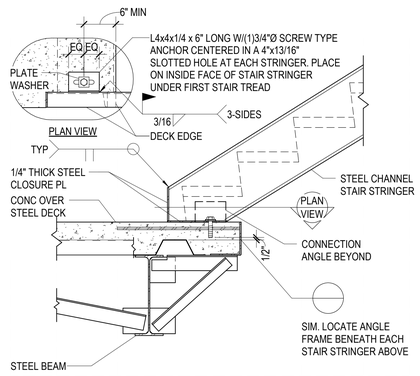

C1 / SF532 TYPICAL STAIR DETAIL (SLIPPED CONNECTION)
NO SCALE

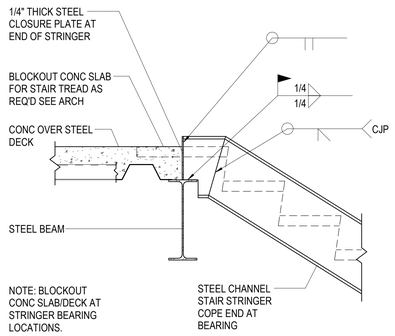

C2 / SF532 TYPICAL STAIR DETAIL
NO SCALE

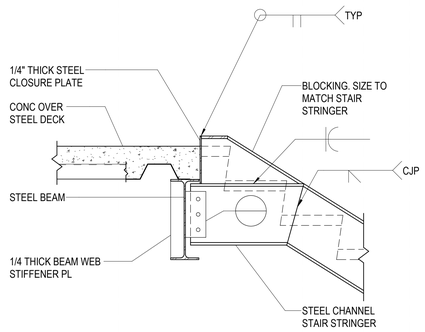

C3 / SF532 TYPICAL STAIR DETAIL
NO SCALE

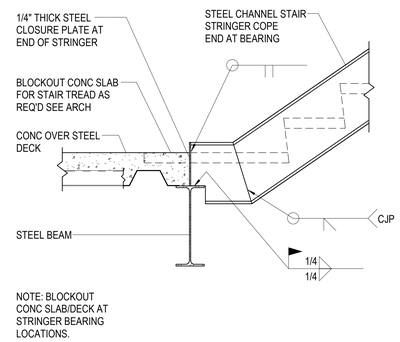

C4 / SF532 TYPICAL STAIR DETAIL (RIGID CONNECTION)
NO SCALE

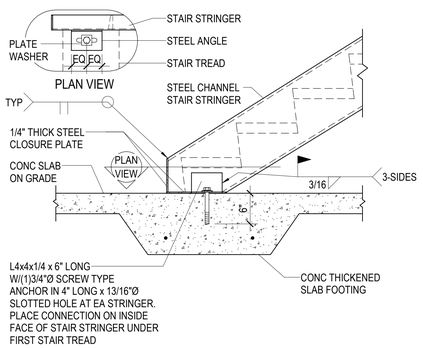

B1 / SF532 TYPICAL STAIR DETAIL (SLIPPED CONNECTION)
NO SCALE

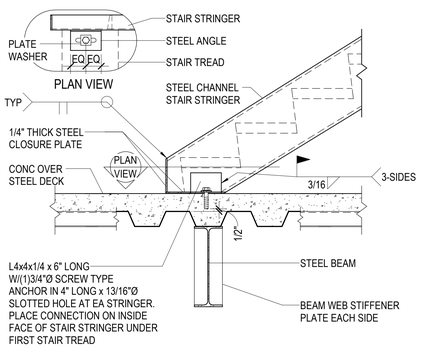

B2 / SF532 TYPICAL STAIR DETAIL (SLIPPED CONNECTION)
NO SCALE

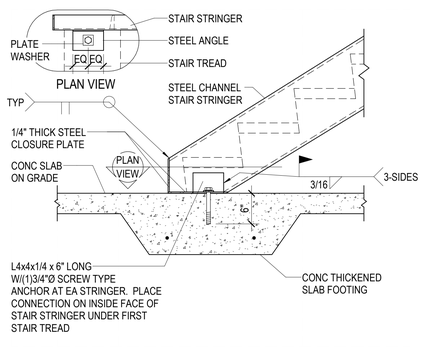

B3 / SF532 TYPICAL STAIR DETAIL (RIGID CONNECTION)
NO SCALE

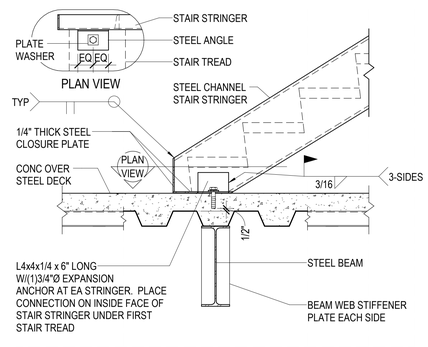

B4 / SF532 TYPICAL STAIR DETAIL (RIGID CONNECTION)
NO SCALE

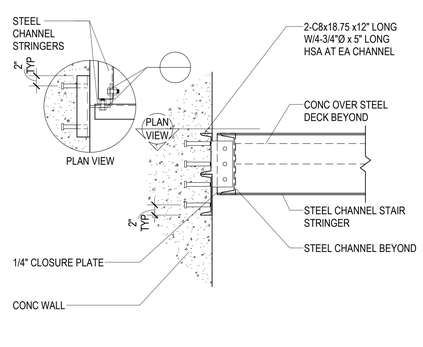

B5 / SF532 TYPICAL STAIR DETAIL
NO SCALE

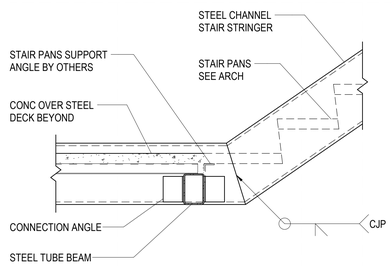

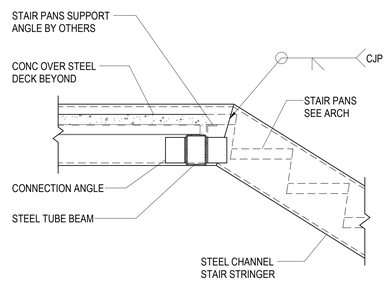

NOTE: SEE DETAIL FOR ALTERNATE STEEL CHANNEL CONNECTION

A1 / SF532 TYPICAL STAIR DETAIL
NO SCALE

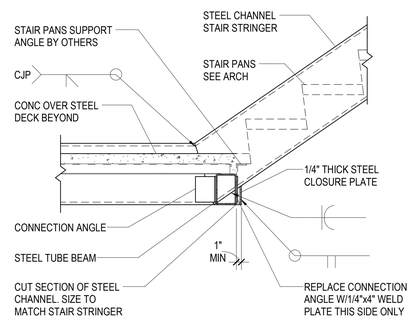

A5 / SF532 TYPICAL STAIR DETAIL (ALTERNATE)
NO SCALE

© HKS, INC.

HKS

ARCHITECT
HKS ARCHITECTS, INC.
90 SOUTH 400 WEST, #110
SALT LAKE CITY, UTAH 84101

CIVIL ENGINEER
GREAT BASIN ENGINEERING, INC
5746 SOUTH 1475 EAST
OGDEN, UTAH 84403

LANDSCAPE ARCHITECT
MGB+A STUDIO
145 WEST 200 SOUTH
SALT LAKE CITY, UTAH 84101

STRUCTURAL ENGINEER
REAVELEY ENGINEERS
250 EAST 200 SOUTH, SUITE 1000
SALT LAKE CITY, UTAH 84111

M/P/FP ENGINEER
RESOLUT GROUP
181 EAST 5600 SOUTH, SUITE 200
MURRAY, UTAH 84107

E/T ENGINEER
LYNK ENGINEERS
324 SOUTH STATE STREET, SUITE 400
SALT LAKE CITY, UTAH 84111

Intermountain Health

UTAH VALLEY SPORTS PERFORMANCE CENTER

PROJECT ADDRESS: WEST 880 NORTH 200 WEST PROVO, UTAH 84604

SEAL & SIGNATURE

KEY PLAN

REVISION

NO.	DESCRIPTION	DATE

HKS PROJECT NUMBER
27487.000

DATE
08/26/2026

ISSUE
DESIGN DEVELOPMENT

SHEET TITLE
STAIR FRAMING DETAILS (CHANNELS)

SHEET NO.
SF532

TITLE BLOCK VERSION: 20210930
MODEL: Autodesk Docs://27487.000_IH - UV Sports Performance Center_2025/S_IH-UV_Sports-Performance-Center_2025.rvt
PRINT DATE: 8/26/2026 5:20:08 PM TEMPLATE VERSION:

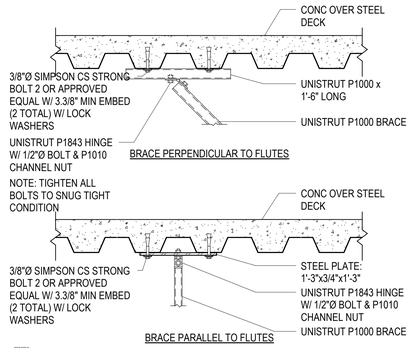

D1 / SF533 TYPICAL UNISTRUT CONNECTION TO CONC SLAB OVER FLOOR DECK

NO SCALE

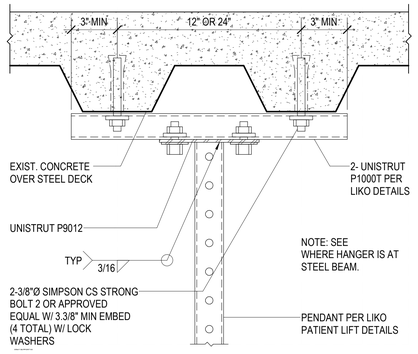

D2 / SF533 PATIENT LIFT CONNECTION TO CONCRETE OVER STEEL DECK

NO SCALE

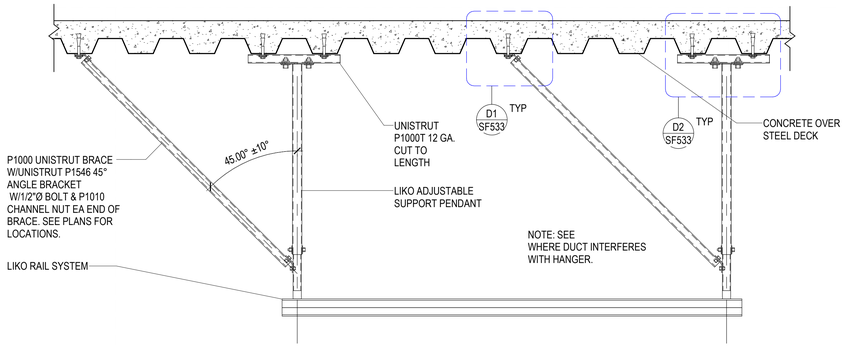

C1 / SF533 PATIENT LIFT SUPPORT DETAIL

NO SCALE

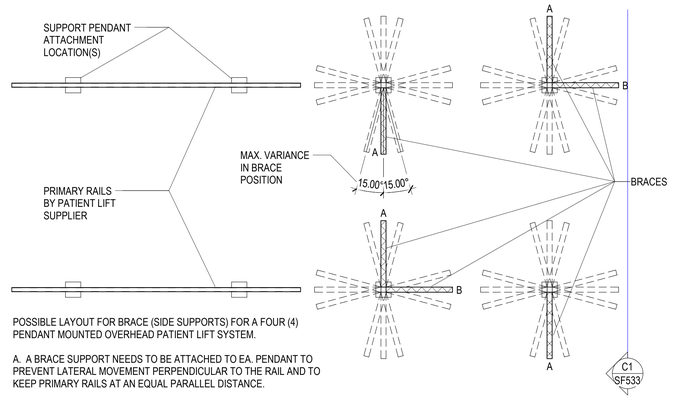

POSSIBLE LAYOUT FOR BRACE (SIDE SUPPORTS) FOR A FOUR (4) PENDANT MOUNTED OVERHEAD PATIENT LIFT SYSTEM.

A. A BRACE SUPPORT NEEDS TO BE ATTACHED TO EA. PENDANT TO PREVENT LATERAL MOVEMENT PERPENDICULAR TO THE RAIL AND TO KEEP PRIMARY RAILS AT AN EQUAL PARALLEL DISTANCE.

B. A BRACE SUPPORT NEEDS TO BE ATTACHED TO ONE OF THE TWO SUPPORT PENDANTS TO PREVENT LATERAL MOVEMENT PARALLEL TO THE RAIL.

C3 / SF533 BRACING LAYOUT AND VARIANCE ALLOWANCES FOR PATIENT LIFTS

NO SCALE

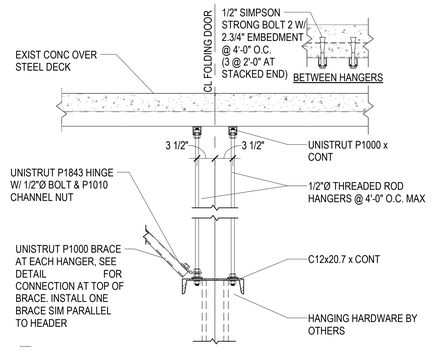

C4 / SF533 FOLDING DOOR SUPPORT DETAIL

NO SCALE

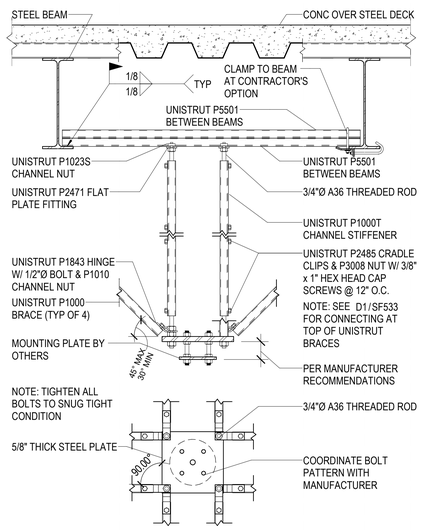

B1 / SF533 TYPICAL DOUBLE LIGHT SUPPORT FROM STRUCTURE

NO SCALE

HKS

ARCHITECT
HKS ARCHITECTS, INC.
90 SOUTH 400 WEST, #110
SALT LAKE CITY, UTAH 84101

CIVIL ENGINEER
GREAT BASIN ENGINEERING, INC
5746 SOUTH 1475 EAST
OGDEN, UTAH 84403

LANDSCAPE ARCHITECT
MGB+A STUDIO
145 WEST 200 SOUTH
SALT LAKE CITY, UTAH 84101

STRUCTURAL ENGINEER
REAVELEY ENGINEERS
250 EAST 200 SOUTH, SUITE 1000
SALT LAKE CITY, UTAH 84111

M/P/FP ENGINEER
RESOLUT GROUP
181 EAST 5600 SOUTH, SUITE 200
MURRAY, UTAH 84107

E/T ENGINEER
LYNK ENGINEERS
324 SOUTH STATE STREET, SUITE 400
SALT LAKE CITY, UTAH 84111

Intermountain Health

UTAH VALLEY SPORTS PERFORMANCE CENTER

PROJECT ADDRESS: WEST 880 NORTH 200 WEST PROVO, UTAH 84604

SEAL & SIGNATURE

KEY PLAN

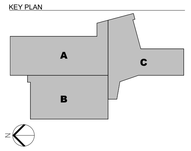

REVISION

NO.	DESCRIPTION	DATE

HKS PROJECT NUMBER
27487.000

DATE
08/26/2026

ISSUE
CONSTRUCTION DOCUMENTS

SHEET TITLE
PATIENT LIFT SUPPORT DETAILS

SHEET NO.
SF533

© HKS, INC.

TITLE BLOCK VERSION: 20210930
MODEL: Autodesk Docs://27487.000_IH - UV Sports Performance Center 2025/S_IH-UV_Sports-Performance-Center_2025.rvt
PRINT DATE: 8/26/2026 5:20:03 PM TEMPLATE VERSION:

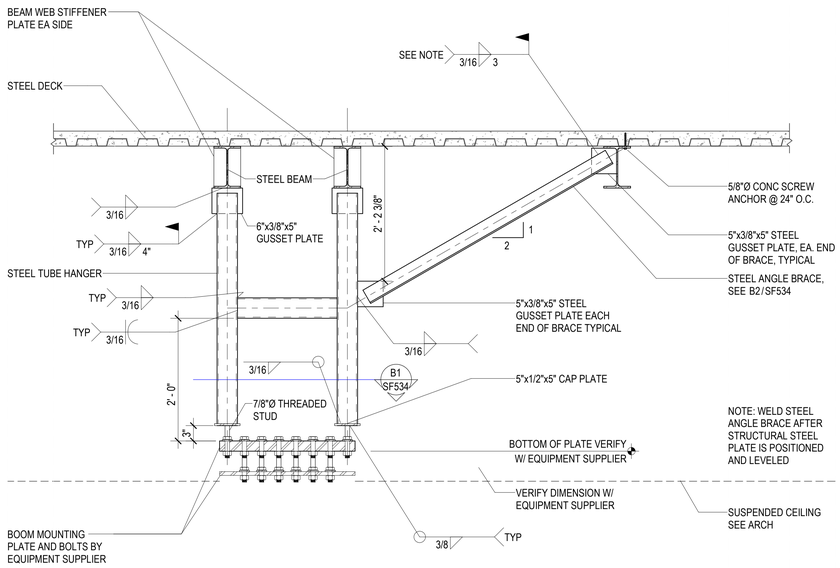

D1 / SF534 SECTION AT STERIS TANDEN SUPPORT

NO SCALE

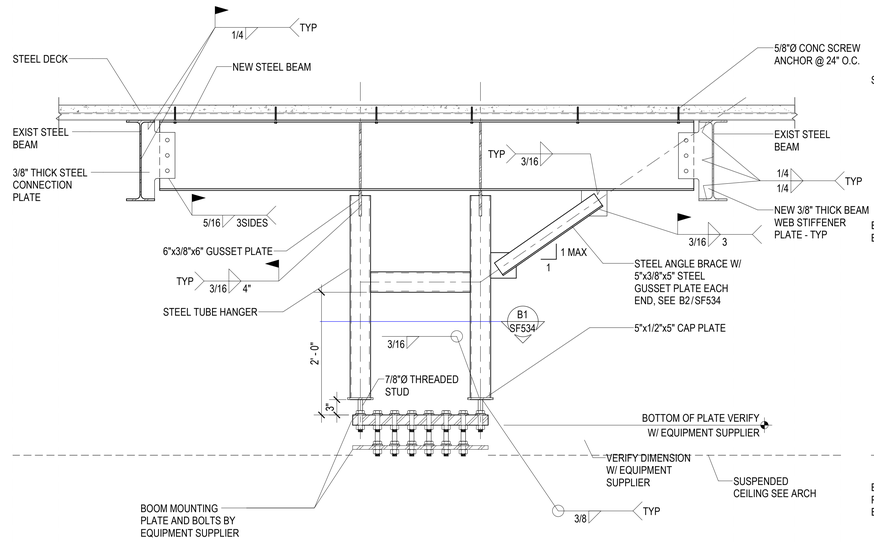

D3 / SF534 SECTION AT STERIS TANDEN SUPPORT

NO SCALE

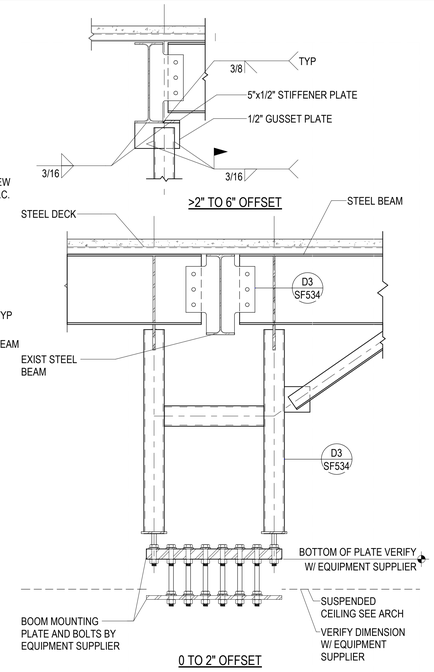

D5 / SF534 SECTION AT STERIS TANDEN SUPPORT - CONDITION AT HANGER BELOW GIRDER OR PURLIN

NO SCALE

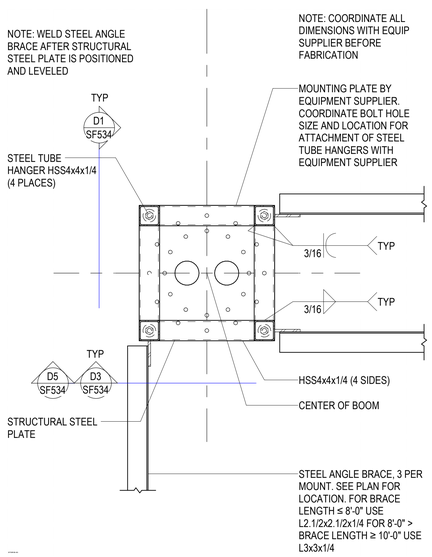

B1 / SF534 STERIS TANDEM SUPPORT PLATE DETAIL - PLAN VIEW

NO SCALE

ANGLE BRACE SCHEDULE		
BRACE LENGTH "L"	ANGLE BRACE SIZE	WELD PLATE SIZE
UP TO 4'-0"	L2x2x1/4	4"x1/4"x4"
4'-0" TO 8'-0"	L3x3x1/4	4"x1/4"x4"
8'-0" TO 12'-0"	2-L2.1/2x2.1/2x1/4	4"x3/8"x4"
12'-0" TO 16'-0"	2-L3x3x1/4	5"x3/8"x5"

NOTE:
1. WHERE DOUBLE ANGLES ARE USED PROVIDE 3"x3/8" SPACER PLATES AT THIRD POINTS.

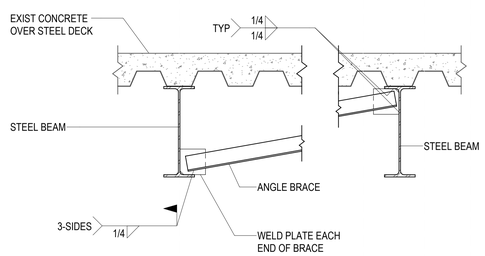

B2 / SF534 TYPICAL STEEL BEAM BOTTOM FLANGE BRACE DETAIL

NO SCALE

HKS

ARCHITECT
HKS ARCHITECTS, INC.
90 SOUTH 400 WEST, #110
SALT LAKE CITY, UTAH 84101

CIVIL ENGINEER
GREAT BASIN ENGINEERING, INC
5746 SOUTH 1475 EAST
OGDEN, UTAH 84403

LANDSCAPE ARCHITECT
MGB+A STUDIO
145 WEST 200 SOUTH
SALT LAKE CITY, UTAH 84101

STRUCTURAL ENGINEER
REAVELEY ENGINEERS
250 EAST 200 SOUTH, SUITE 1000
SALT LAKE CITY, UTAH 84111

M/P/FP ENGINEER
RESOLUT GROUP
181 EAST 5600 SOUTH, SUITE 200
MURRAY, UTAH 84107

E/T ENGINEER
LYNK ENGINEERS
324 SOUTH STATE STREET, SUITE 400
SALT LAKE CITY, UTAH 84111

Intermountain Health

UTAH VALLEY SPORTS PERFORMANCE CENTER

PROJECT ADDRESS: WEST 880 NORTH 200 WEST PROVO, UTAH 84604

SEAL & SIGNATURE

KEY PLAN

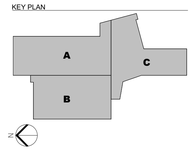

REVISION

NO.	DESCRIPTION	DATE

HKS PROJECT NUMBER
27487.000

DATE
08/26/2026

ISSUE
CONSTRUCTION DOCUMENTS

SHEET TITLE
MEDICAL EQUIPMENT SUPPORT DETAILS

SHEET NO.
SF534

© HKS, INC.

TITLE BLOCK VERSION: 20210930
MODEL: Autodesk Docs://27487.000_H - UV Sports Performance Center_2025.rvt
PRINT DATE: 8/26/2026 5:20:03 PM TEMPLATE VERSION:

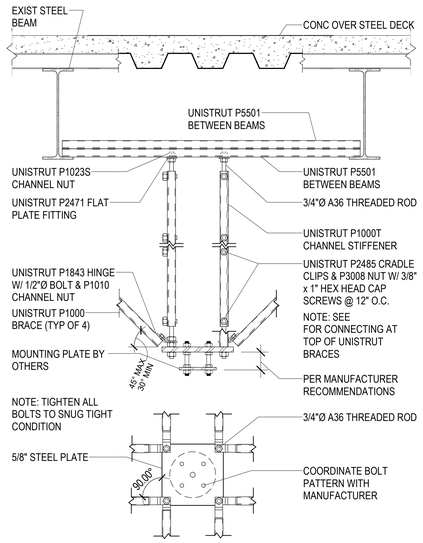

D4 / SF535 TYPICAL DOUBLE LIGHT SUPPORT FROM STRUCTURE

NO SCALE

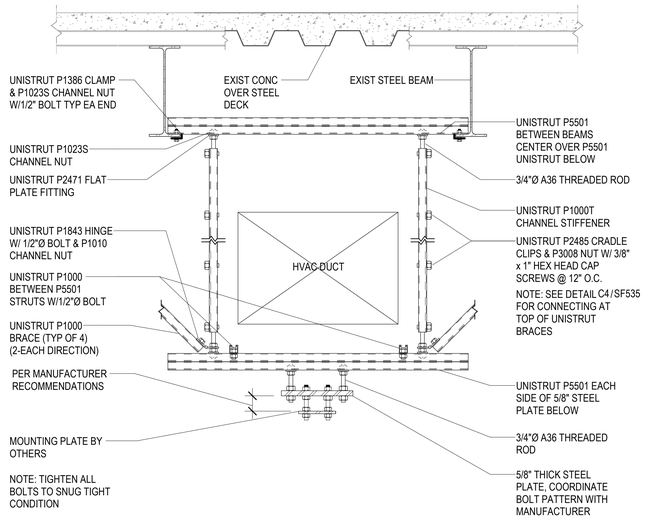

D5 / SF535 TYPICAL DOUBLE LIGHT SUPPORT FROM STRUCTURE AT MECHANICAL DUCT

NO SCALE

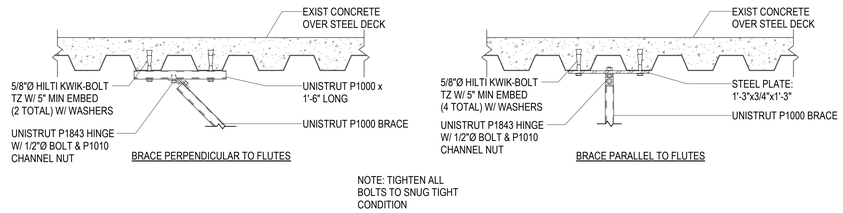

NOTE: TIGHTEN ALL BOLTS TO SNUG TIGHT CONDITION

C4 / SF535 TYPICAL UNISTRUT CONNECTION TO CONC OVER STEEL DECK

NO SCALE

HKS

ARCHITECT
HKS ARCHITECTS, INC.
90 SOUTH 400 WEST, #110
SALT LAKE CITY, UTAH 84101

CIVIL ENGINEER
GREAT BASIN ENGINEERING, INC
5746 SOUTH 1475 EAST
OGDEN, UTAH 84403

LANDSCAPE ARCHITECT
MGB+A STUDIO
145 WEST 200 SOUTH
SALT LAKE CITY, UTAH 84101

STRUCTURAL ENGINEER
REAVELEY ENGINEERS
250 EAST 200 SOUTH, SUITE 1000
SALT LAKE CITY, UTAH 84111

M/P/FP ENGINEER
RESOLUT GROUP
181 EAST 5600 SOUTH, SUITE 200
MURRAY, UTAH 84107

E/T ENGINEER
LYNK ENGINEERS
324 SOUTH STATE STREET, SUITE 400
SALT LAKE CITY, UTAH 84111

Intermountain Health

UTAH VALLEY SPORTS PERFORMANCE CENTER

PROJECT ADDRESS: WEST 880 NORTH 200 WEST PROVO, UTAH 84604

SEAL & SIGNATURE

KEY PLAN

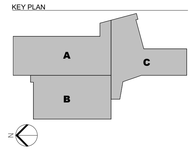

REVISION

NO.	DESCRIPTION	DATE

HKS PROJECT NUMBER
27487.000

DATE
08/26/2026

ISSUE
CONSTRUCTION DOCUMENTS

SHEET TITLE
MEDICAL EQUIPMENT SUPPORT DETAILS

SHEET NO.
SF535

© HKS, INC.

TITLE BLOCK VERSION: 2021.0930
MODEL: Autodesk Docs://27487.000_IH-UV Sports Performance Center_2025/S_IH-UV_Sports-Performance-Center_2025.rvt
PRINT DATE: 8/26/2026 5:20:10 PM TEMPLATE VERSION:

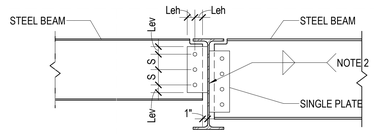

BEAM TO BEAM CONNECTION

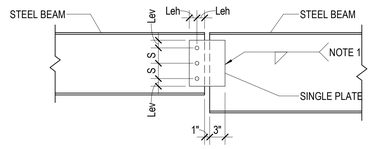

BEAM TO BEAM CONNECTION

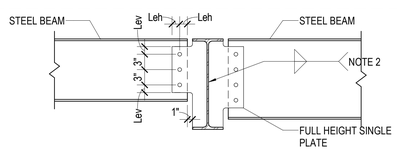

BEAM TO BEAM CONNECTION AT FULL HEIGHT STIFFENER

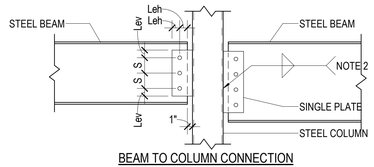

BEAM TO COLUMN CONNECTION

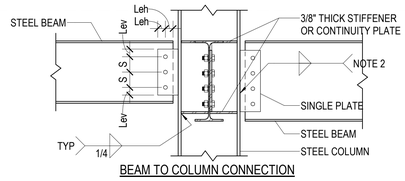

BEAM TO COLUMN CONNECTION

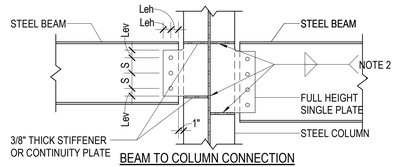

BEAM TO COLUMN CONNECTION

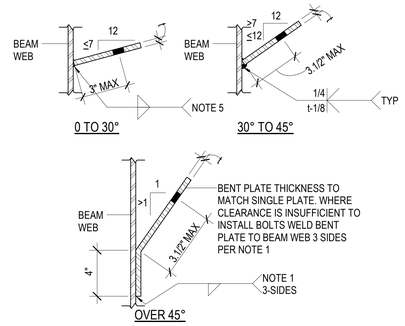

SKEWED CONNECTION (PLAN VIEW)

SINGLE PLATE CONNECTION SCHEDULE			
BEAM SIZE	WEB PLATE THICKNESS (t)	A325N BOLTS	
		NUMBER	SIZE
W8 AND W10	3/8"	2	7/8"Ø
W12 AND W14	3/8"	3	7/8"Ø
W16	3/8"	4	7/8"Ø
W18 AND W21	3/8"	5	7/8"Ø
W24	3/8"	6	7/8"Ø
W27	3/8"	7	7/8"Ø
W30	3/8"	8	7/8"Ø
W33	3/8"	9	7/8"Ø
W36	3/8"	10	7/8"Ø
W40	3/8"	11	7/8"Ø
W44	3/8"	12	7/8"Ø

NOTES:
1. FILLET WELDS ONE SIDE SHALL EQUAL THE PLATE THICKNESS MINUS 1/16" (1/4" MIN.)
2. FILLET WELDS TWO SIDES SHALL BE 5/8 THE PLATE THICKNESS (1/4" MIN.) EACH SIDE
3. BOLT EDGE DISTANCE SHALL BE AS FOLLOWS: Leh = 2 x BOLT DIAMETER; Lev = 1.1/2'.
4. BOLT SPACING (S) SHALL BE 3".
5. AT SKEWED JOINTS PROVIDE AN EQUIVALENT LEG SIZE TO NOTE 2 PER AWS D1.1.
6. PROVIDE SHORT SLOTTED HOLES WHEN 6 OR MORE BOLTS ARE REQUIRED AND BOLT DIAMETER IS ≤ 3/4".

D1 / SF601 TYPICAL SINGLE PLATE CONNECTION DETAILS AND SCHEDULE
NO SCALE

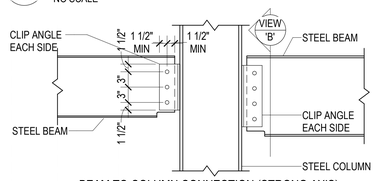

BEAM TO COLUMN CONNECTION (STRONG AXIS)

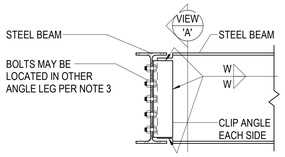

BEAM TO BEAM CONNECTION (ONE SIDE)

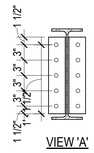

VIEW 'A'

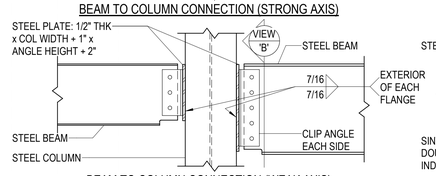

BEAM TO COLUMN CONNECTION (WEAK AXIS)

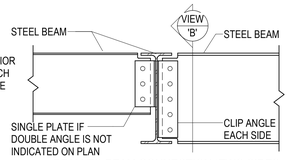

BEAM TO BEAM CONNECTION (TWO SIDES)

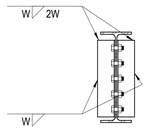

VIEW 'B'

DOUBLE ANGLE CONNECTION SCHEDULE		
BEAM SIZE	A325N BOLTS	
	NO. PER LEG	SIZE
W8 AND W10	2	7/8"Ø
W12 AND W14	3	7/8"Ø
W16	4	7/8"Ø
W18 AND W21	5	7/8"Ø
W24	6	7/8"Ø
W27	7	7/8"Ø
W30	8	7/8"Ø
W33	9	7/8"Ø
W36	10	7/8"Ø
W40	11	7/8"Ø
W44	12	7/8"Ø

NOTES:
1. CLIP ANGLES: (2) L4x3.1/2. THICKNESS SHALL BE EQUAL TO ONE HALF THE BEAM WEB THICKNESS PLUS 1/16" (1/4" MIN., 1/2" MAX). FOR TWO ROWS OF BOLTS OR SKEWED CONNECTIONS, USE BENT PLATES.
2. FILLET WELDS (W) SHALL BE ANGLE THICKNESS MINUS 1/16" (1/4" MIN.)
3. CONTRACTOR HAS OPTION TO BOLT CLIP ANGLES AT EITHER BEAM WEB IN ONE SIDED BEAM TO BEAM CONNECTIONS. WHERE DOUBLE ANGLE CONNECTION OCCURS ON EACH SIDE OF WEB, ANGLES SHALL BE WELDED TO THE GIRDER.
4. STAGGERED ANGLES ARE NOT ACCEPTABLE WITHOUT APPROVAL OF THE STRUCTURAL ENGINEER.

C1 / SF601 TYPICAL DOUBLE ANGLE CONNECTION DETAILS AND SCHEDULE
NO SCALE

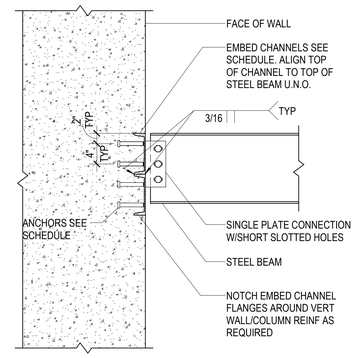

CONNECTION SCHEDULE		
BEAM DEPTH	EMBED CHANNEL	ANCHORS
TO 10"	(1) C8x18.75x12"	(4) 3/4"Ø x 5" LONG HSA
TO 16"	(2) C8x18.75x12"	(8) 3/4"Ø x 5" LONG HSA
TO 24"	(3) C8x18.75x12"	(12) 3/4"Ø x 5" LONG HSA

NOTES:
1. WELD MULTIPLE EMBEDS TOGETHER WITH BUTT WELD EACH SIDE, FULL LENGTH.
2. PROVIDE 2" EDGE DISTANCE FROM END OF CHANNEL EMBED TO CENTER OF HSA, TYPICAL.

C4 / SF601 TYPICAL EMBED CHANNEL CONNECTION SCHEDULE
NO SCALE

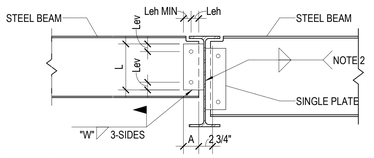

BEAM TO BEAM CONNECTION

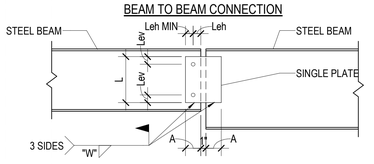

BEAM TO BEAM CONNECTION

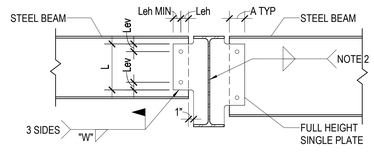

BEAM TO BEAM CONNECTION AT FULL HEIGHT STIFFENER

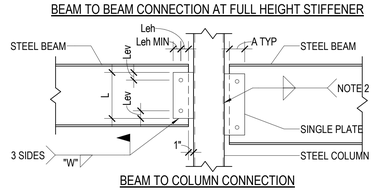

BEAM TO COLUMN CONNECTION

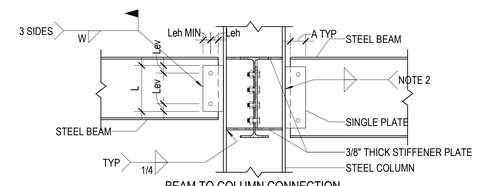

BEAM TO COLUMN CONNECTION

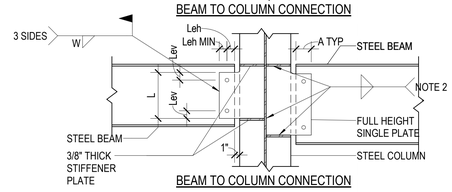

BEAM TO COLUMN CONNECTION

SINGLE PLATE COLLECTOR/CHORD CONNECTION SCHEDULE					
BEAM SIZE	WEB PLATE			WELD "W"	ERECTION BOLTS
	"L"	"A"	THICKNESS		
BEAM SIZE	__"	__"	__"	_/_"	#

NOTES:
1. ERECTION BOLT SHALL BE 7/8"Ø A325N BOLTS.
2. FILLET WELDS TWO SIDES SHALL BE 5/8 THE PLATE THICKNESS (1/4" MIN.) EACH SIDE
3. BOLT EDGE DISTANCE SHALL AS FOLLOWS: Leh = 2 x BOLT DIAMETER; Lev = 1.1/2".
4. BOLT SPACING (S) SHALL BE 3" MINIMUM.

B1 / SF601 TYPICAL WELDED SINGLE PLATE COLLECTOR/CHORD CONNECTION DETAILS AND SCHEDULE
NO SCALE

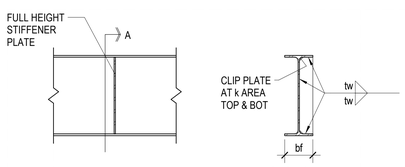

SECTION A

WELD SCHEDULE		
bf	THICKNESS*	tw
UP TO 8.25"	1/4"	3/16"
> 8.25" ≤ 12.25"	3/8"	1/4"
> 12.25" ≤ 16.5"	1/2"	5/16"
> 16.5" ≤ 22"	5/8"	5/16"

NOTE:
1. * STIFFENER THICKNESS IS BASED UPON WIDTH OF BEAM FLANGE (bf) UNLESS NOTED OTHERWISE IN DETAILS.

A1 / SF601 TYPICAL STIFFENER PLATE DETAIL
NO SCALE

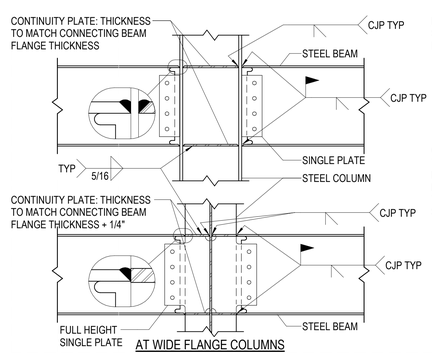

AT WIDE FLANGE COLUMNS

NOTE:
SEE TYPICAL WELD ACCESS HOLE DETAIL A5/SF601 FOR DETAILING.

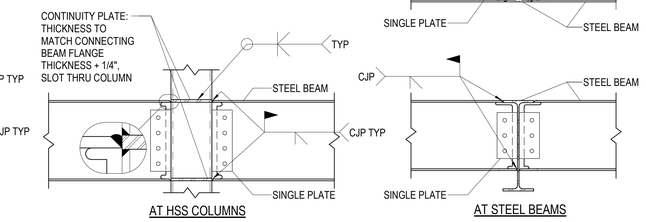

AT HSS COLUMNS

AT STEEL BEAMS

A2 / SF601 TYPICAL GRAVITY BEAM MOMENT CONNECTION
NO SCALE

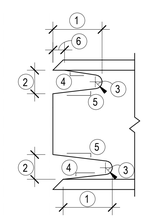

ROLLED SHAPES AND BUILT-UP SHAPES ASSEMBLED PRIOR TO CUTTING THE WELD ACCESS HOLE.

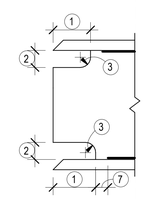

BUILT-UP SHAPES ASSEMBLED AFTER CUTTING THE WELD ACCESS HOLE.

NOTES:
1. LENGTH: NOT LESS THAN THE GREATER OF 1.5 x WEB THICKNESS OR 1.1/2"
2. HEIGHT: NOT LESS THAN THE GREATER OF 1.0 x WEB THICKNESS OR 3/4" BUT NEED NOT EXCEED 2"
3. RADIUS: 3/8" MIN. GRIND THE THERMALLY CUT SURFACES OF WELD ACCESS HOLES IN HEAVY SHAPES AS DEFINED IN AISC 360-16 SECTIONS A3.1(c) AND (d).
4. SLOPE FORMS A TRANSITION FROM WEB TO THE FLANGE.
5. SLOPE MAY BE HORIZONTAL.
6. THE BOTTOM OF THE TOP FLANGE IS TO BE CONTOURED TO PERMIT THE TIGHT FIT BACKING BARS WHERE THEY ARE TO BE USED.
7. THE WEB-TO-FLANGE WELD OF BUILT-UP MEMBERS IS TO BE HELD BACK A DISTANCE OF AT LEAST THE WELD SIZE FROM THE EDGE OF THE ACCESS HOLE.

A5 / SF601 TYPICAL WELD ACCESS HOLE DETAIL
NO SCALE

© HKS, INC.

HKS

ARCHITECT
HKS ARCHITECTS, INC.
90 SOUTH 400 WEST, #110
SALT LAKE CITY, UTAH 84101

CIVIL ENGINEER
GREAT BASIN ENGINEERING, INC
5746 SOUTH 1475 EAST
OGDEN, UTAH 84403

LANDSCAPE ARCHITECT
MGB+A STUDIO
145 WEST 200 SOUTH
SALT LAKE CITY, UTAH 84101

STRUCTURAL ENGINEER
REAVELEY ENGINEERS
250 EAST 200 SOUTH, SUITE 1000
SALT LAKE CITY, UTAH 84111

M/P/FP ENGINEER
RESOLUT GROUP
181 EAST 5600 SOUTH, SUITE 200
MURRAY, UTAH 84107

E/T ENGINEER
LYNK ENGINEERS
324 SOUTH STATE STREET, SUITE 400
SALT LAKE CITY, UTAH 84111

Intermountain Health

UTAH VALLEY SPORTS PERFORMANCE CENTER

PROJECT ADDRESS: WEST 800 NORTH 200 WEST PROVO, UTAH 84604

SEAL & SIGNATURE

KEY PLAN

REVISION

NO.	DESCRIPTION	DATE

HKS PROJECT NUMBER
27487.000

DATE
08/26/2026

ISSUE
DESIGN DEVELOPMENT

SHEET TITLE
TYPICAL STEEL FRAMING SCHEDULES

SHEET NO.
SF601

TITLE BLOCK VERSION: 20210930
MODEL: Autodesk Docs://27487.000_IHU - UV Sports Performance Center_2025/S. IHU - UV Sports Performance Center_2025.rvt
PRINT DATE: 8/26/2026 5:20:12 PM TEMPLATE VERSION:

STEEL COLUMN SCHEDULE

North Stair Landing - LEVEL 3.5																																North Stair Landing - LEVEL 3.5
134' - 3" Level 3																																134' - 3" Level 3
131' - 0" Mid Level Roof					HSS8x8x1/4																											131' - 0" Mid Level Roof
121' - 2 5/8" Level 2									HSS8x8x1/4	HSS8x8x1/4	HSS8x8x5/16	HSS8x8x5/16	HSS8x8x5/16				HSS8x8x1/4	HSS8x8x3/16	HSS8x8x3/16	HSS8x8x3/8	HSS8x8x5/16	HSS8x8x3/16	HSS8x8x5/16	HSS8x8x3/8	HSS8x8x1/4	HSS8x8x1/4	HSS8x8x1/4					121' - 2 5/8" Level 2
115' - 0" Level 1		HSS6x6x1/4	HSS6x6x1/4	HSS6x6x1/4		HSS8x8x5/16	HSS8x8x3/8	HSS8x8x3/16				HSS8x8x5/16		HSS6x6x3/16	HSS8x8x5/16	HSS6x6x1/4										HSS8x8x1/4	HSS8x8x1/4	HSS8x8x1/4	HSS8x8x1/4	HSS8x8x3/16	HSS8x8x1/4	HSS8x8x3/8	115' - 0" Level 1
100' - 0"		SBP-1	SBP-1	SBP-1		SBP-1	SBP-1	SBP-1		SBP-1	SBP-1		SBP-1	SBP-1	SBP-1	SBP-1	SBP-1	SBP-1	SBP-1	SBP-1	SBP-1	SBP-1	SBP-1	SBP-1	SBP-1	SBP-1	SBP-1	SBP-1	SBP-1	SBP-1	SBP-1	100' - 0"
Column Locations	A(3' - 3 3/8")-5	A-9, A.1-9	A-10	A.2(3' - 2 7/8")-11	B(-1' - 6")-2(8' - 5 3/8"), C(8' - 0")-2(8' - 6 3/8")	B-5	B-10	C-1	C-2	C-3	C-4	C-5, H-5	C-6, C-7, C-8, E-6SBP-1"-8, F-7, G-4, G-5, H-6, H-7, J-6, J-7	C-9	C-10	C-12	C-14(-2' - 11 3/8")	D-11	D-12(9' - 4 1/8")	D-13	D-14, D-15, D-16, D-17	D-18	D-19	E-1, E-2	E-4, E-5, E-8, F-4, F-5, F-8	E-11	E-12(6' - 3 1/2")	F-11	F-12(2' - 7 1/2")	G-1, G-2, J-9, K-9, K-10, L-9, L-10	G-11	G-12(-2' - 1")	G-13, G-14, G-15, G-16, G-17	G(-5' - 9")-13(5' - 10 1/8"), G(-6 3/4")-14(-3' - 1 1/8"), H(2' - 11 1/2")-12(2' - 10"), H(7" - 1 3/8")-13(-9' - 0 7/8")	Column Locations

STEEL COLUMN SCHEDULE

North Stair Landing - LEVEL 3.5																																North Stair Landing - LEVEL 3.5
134' - 3" Level 3																																134' - 3" Level 3
131' - 0" Mid Level Roof											HSS8x8x1/4																					131' - 0" Mid Level Roof
121' - 2 5/8" Level 2		HSS8x8x3/16	HSS8x8x1/4	HSS8x8x5/16	HSS8x8x1/4	HSS8x8x1/4	HSS8x8x1/4		HSS8x8x1/4	HSS8x8x5/16		HSS8x8x3/16	HSS8x8x1/4	HSS8x8x1/4	HSS8x8x1/4	HSS8x8x1/4			HSS8x8x1/4	HSS8x8x1/4	HSS8x8x1/4	HSS8x8x1/4	HSS8x8x1/4	HSS5x5x3/16	HSS8x8x5/16	HSS8x8x1/4						121' - 2 5/8" Level 2
115' - 0" Level 1																													HSS8x8x1/4			115' - 0" Level 1
100' - 0"		SBP-1	SBP-1	SBP-1	SBP-1	SBP-1	SBP-1		SBP-1	SBP-1	SBP-1	SBP-1	SBP-1	SBP-1	SBP-1		SBP-1			SBP-1	SBP-1	SBP-1	SBP-1	SBP-1	SBP-1	SBP-1		M(-8")-5(-3' - 7"), M(-8")-6(4' - 1"), M(-8")-6(-10' - 7 3/8"), M(-8")-7(8' - 1")	SBP-1		100' - 0"
Column Locations	G-16(-8' - 7 3/4"), G-18	G-19	H-4	H-8, J-8	H-9	H-10	H-12(-5' - 4 1/2")	H(-14' - 10 1/2")-12(-8' - 1 3/8")	J-4	J-5	J-10	J-12(-10' - 10 1/8")	K-3	K-4	K-5	K-6	K-8	K(6' - 3 1/4")-10	K(6' - 3 1/4")-11(11' - 5 3/4")	L-3	L-4	L-5	L-6	L-8	M-3	M-4	M-5		M-10		Column Locations

STEEL COLUMN SCHEDULE NOTES

1. SEE TYPICAL STEEL BASE PLATE SCHEDULE AND DETAILS FOR BASE PLATE SIZE, THICKNESS AND ANCHOR ROD LAYOUT.
2. SEE TYPICAL STEEL CAP PLATE DETAILS FOR CAP PLATE SIZE & LAYOUT.
3. COLUMN SPLICES SHALL BE LOCATED AND DETAILED PER TYPICAL SPLICE DETAILS, U.N.O.

© HKS, INC.

HKS

ARCHITECT
HKS ARCHITECTS, INC.
90 SOUTH 400 WEST, #110
SALT LAKE CITY, UTAH 84101

CIVIL ENGINEER
GREAT BASIN ENGINEERING, INC
5746 SOUTH 1475 EAST
OGDEN, UTAH 84403

LANDSCAPE ARCHITECT
MGB+A STUDIO
145 WEST 200 SOUTH
SALT LAKE CITY, UTAH 84101

STRUCTURAL ENGINEER
REAVELEY ENGINEERS
250 EAST 200 SOUTH, SUITE 1000
SALT LAKE CITY, UTAH 84111

M/P/FP ENGINEER
RESOLUT GROUP
181 EAST 5600 SOUTH, SUITE 200
MURRAY, UTAH 84107

E/T ENGINEER
LYNK ENGINEERS
324 SOUTH STATE STREET, SUITE 400
SALT LAKE CITY, UTAH 84111

Intermountain Health

UTAH VALLEY SPORTS PERFORMANCE CENTER

PROJECT ADDRESS: WEST 880 NORTH 200 WEST PROVO, UTAH 84604

SEAL & SIGNATURE

KEY PLAN

REVISION

NO.	DESCRIPTION	DATE

HKS PROJECT NUMBER
27487.000

DATE
08/26/2026

ISSUE
DESIGN DEVELOPMENT

SHEET TITLE
STEEL COLUMN SCHEDULE

SHEET NO.
SF602

TITLE BLOCK VERSION: 20210930
MODEL: Autodesk Docs://27487.000_IH - UV Sports Performance Center 2025/S_IHUV_Sports-Performance-Center_2025.rvt
PRINT DATE: 8/26/2026 5:20:12 PM TEMPLATE VERSION:

STEEL BASE PLATE SCHEDULE						
BASE PLATE MARK	N	B	THICK-NESS	C	TYPE	REMARKS
SBP-1	N	B	T	C	W1	
SBP-2						

NOTES:
1. BASE PLATES BEARING ON CONCRETE SHALL BE INSTALLED W/ (4) 3/4"Ø ANCHOR RODS UNO. PROJECT ANCHOR RODS 3" (MIN.) ABOVE THE TOP OF THE BASE PLATE. ALL BOLTS SHALL BE INSTALLED W/ HARDENED WASHERS BENEATH THE NUT. ANY BOLT HOLES LARGER THAN THE BOLT DIAMETER PLUS 5/16" SHALL HAVE 5/16" PLATE WASHERS INSTALLED BENEATH THE HARDENED WASHERS.
2. BASE PLATES BEARING ON STEEL SHALL BE INSTALLED W/(4) 7/8"Ø A325 BOLTS, UNLESS NOTED OTHERWISE.
3. DO NOT WELD ANCHOR RODS

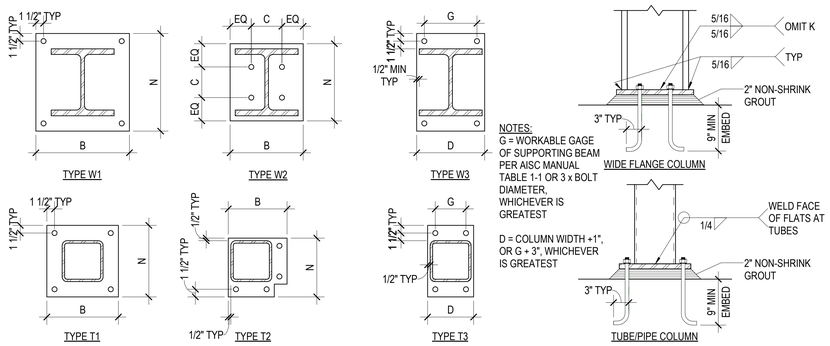

NOTES:
G = WORKABLE GAGE OF SUPPORTING BEAM PER AISC MANUAL TABLE 1-1 OR 3 x BOLT DIAMETER, WHICHEVER IS GREATEST

D = COLUMN WIDTH +1", OR G + 3", WHICHEVER IS GREATEST

B1 / SF603 TYPICAL STEEL BASE PLATE SCHEDULE & DETAILS FOR GRAVITY COLUMNS
NO SCALE

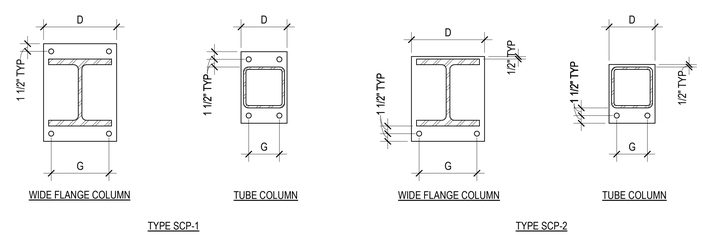

G = WORKABLE GAGE OF SUPPORTED BEAM PER AISC MANUAL TABLE 1-1 OR 3 x BOLT DIAMETER, WHICHEVER IS GREATEST.

D = COLUMN WIDTH + 1", BEAM WIDTH + 1", OR G + 3", WHICHEVER IS GREATEST.

NOTES:
1. ALL BOLTS IN CAP PLATES SHALL BE 7/8"Ø A325N IN STANDARD HOLES TYPICAL UNO.
2. CAP PLATE THICKNESS SHALL BE 3/4" TYPICAL UNO.

B4 / SF603 TYPICAL STEEL CAP PLATE DETAILS FOR GRAVITY COLUMNS
NO SCALE

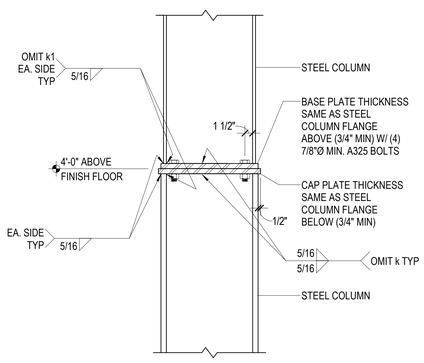

A1 / SF603 TYPICAL STEEL COLUMN SPLICE FOR GRAVITY COLUMNS WITH SAME NOMINAL DEPTH
NO SCALE

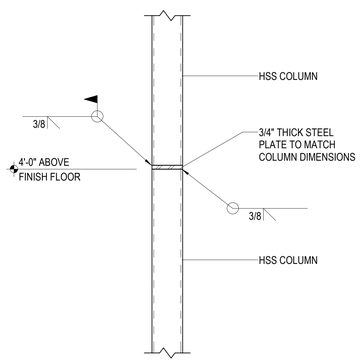

A2 / SF603 TYPICAL HSS STEEL COLUMN SPLICE FOR GRAVITY COLUMNS
NO SCALE

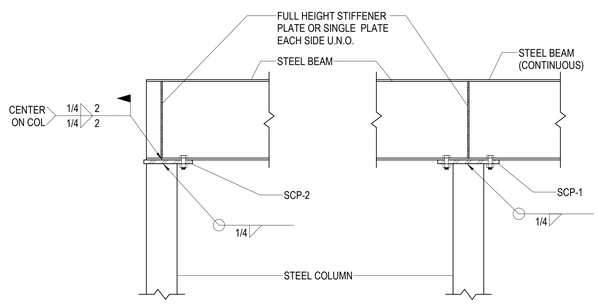

A3 / SF603 TYPICAL STEEL BEAM BEARING ON STEEL COLUMN
NO SCALE

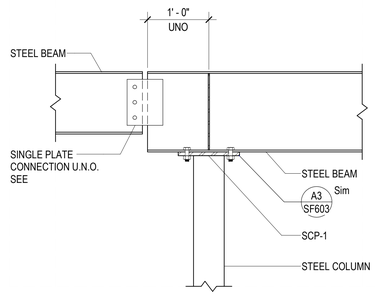

A4 / SF603 TYPICAL DROP-IN BEAM BEARING ON STEEL COLUMN
NO SCALE

© HKS, INC.

HKS

ARCHITECT
HKS ARCHITECTS, INC.
90 SOUTH 400 WEST, #110
SALT LAKE CITY, UTAH 84101

CIVIL ENGINEER
GREAT BASIN ENGINEERING, INC
5746 SOUTH 1475 EAST
OGDEN, UTAH 84403

LANDSCAPE ARCHITECT
MGB+A STUDIO
145 WEST 200 SOUTH
SALT LAKE CITY, UTAH 84101

STRUCTURAL ENGINEER
REAVELEY ENGINEERS
250 EAST 200 SOUTH, SUITE 1000
SALT LAKE CITY, UTAH 84111

M/P/FP ENGINEER
RESOLUT GROUP
181 EAST 5600 SOUTH, SUITE 200
MURRAY, UTAH 84107

E/T ENGINEER
LYNK ENGINEERS
324 SOUTH STATE STREET, SUITE 400
SALT LAKE CITY, UTAH 84111

Intermountain Health

UTAH VALLEY SPORTS PERFORMANCE CENTER

PROJECT ADDRESS: WEST 880 NORTH 200 WEST PROVO, UTAH 84604

SEAL & SIGNATURE

KEY PLAN

REVISION

NO.	DESCRIPTION	DATE

HKS PROJECT NUMBER
27487.000

DATE
08/26/2026

ISSUE
DESIGN DEVELOPMENT

SHEET TITLE
STEEL COLUMN DETAILS

SHEET NO.
SF603

TITLE BLOCK VERSION: 20210930
MODEL: Autodesk Docs://27487.000_IH - UV Sports Performance Center_2025/S_IH-UV_Sports Performance Center_2025.rvt
PRINT DATE: 8/26/2026 5:20:13 PM TEMPLATE VERSION:

STEEL DECK SCHEDULE

MARK	STEEL DECK				CONCRETE FILL			STEEL DECK ATTACHMENT	NOTES
	PROFILE	MIN I (in^4/ft)	MIN S (in^3/ft)	FINISH	THICKNESS (t)	TYPE	REINFORCEMENT		
SD-1	TYPE W3 3" DEEP x 20 GA	0.907	0.510	PHOSPHATIZED/ PAINTED	6.1/2"	LIGHT WEIGHT	6x6-W2.1xW2.1 WWF OR FIBER	SDA-1	2 HR FIRE RATING
SD-2	TYPE B 1.1/2" DEEP x 20 GA	0.219	0.231	GALVANIZED (G60)	-	-	-	SDA-2	-
SD-3	TYPE W2 2" DEEP x 20 GA	0.422	0.323	PHOSPHATIZED/ PAINTED	4"	NORMAL WEIGHT	6x6-W1.4xW1.4 WWF OR FIBER	SDA-3	INTERMEDIATE STAIR LANDINGS
SD-4	TYPE N 3" DEEP x 20 GA	0.890	0.452	GALVANIZED (G60)	-	-	-	SDA-4	-

NOTES:
1. STEEL DECK SHALL COMPLY WITH LATEST REQUIREMENTS OF THE STEEL DECK INSTITUTE (SDI).
2. SUBMIT CURRENT CODE EVALUATION REPORT (ICC OR IAPMO) WITH LOAD AND LATERAL SHEAR CAPACITIES WITH SHOP DRAWINGS.
3. FIBER REINFORCEMENT, WHEN REQUIRED IN SCHEDULE, SHALL BE MACROSYNTHETIC FIBER REINFORCEMENT PER THE CONCRETE MATERIALS SECTION OF THE GENERAL STRUCTURAL NOTES.
4. ALL DECK SHALL BE 3-SPAN CONTINUOUS MINIMUM WHERE POSSIBLE. IN AREAS WHERE 3-SPAN CONDITIONS ARE NOT POSSIBLE THE CONTRACTOR SHALL VERIFY UN-SHORED DECK IS PERMITTED BY THE DECK MANUFACTURER FOR THE SPAN CONDITION, SPAN LENGTH, AND DECK GAUGE. WHERE DECK DOES NOT MEET THE REQUIREMENTS FOR UN-SHORED DECK, THE CONTRACTOR SHALL EITHER PROVIDE HEAVIER GAUGE DECK TO ALLOW FOR UN-SHORED DECK OR PROVIDE SHORING.
5. STEEL DECK WITHOUT CONCRETE FILL SHALL NOT BE USED TO SUPPORT LOADS FROM PLUMBING, HVAC DUCTS, LIGHT FIXTURES, ARCHITECTURAL ELEMENTS OR EQUIPMENT OF ANY KIND, UNLESS SPECIFICALLY NOTED OTHERWISE. LIGHTWEIGHT SUSPENDED ACOUSTICAL CEILINGS WITH A TOTAL WEIGHT PER WIRE NOT EXCEEDING 50# MAY BE HUNG FROM THE STEEL ROOF DECK. THE HANGERS SHOULD BE STAGGERED TO DISTRIBUTE THE LOAD OVER MULTIPLE DECK FLUTES.
6. DO NOT EMBED CONDUITS OR PIPES IN CONCRETE FILL OVER STEEL DECKS WITHOUT APPROVAL OF STRUCTURAL ENGINEER.
7. SEE TYPICAL DETAILS FOR REINFORCEMENT REQUIRED AT OPENINGS THROUGH STEEL DECK. OPENING REINFORCING SHALL BE INSTALLED PRIOR TO SAW CUTTING OPENINGS.
8. PROVIDE MINIMUM G60 GALVANIZED STEEL DECK ABOVE & BELOW MECHANICAL ROOMS.
9. SEE PLANS AND DETAILS FOR LOCATIONS WHERE ADDITIONAL SLAB REINFORCEMENT IS REQUIRED.

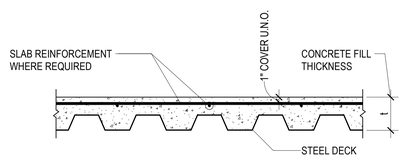

CONCRETE SLAB OVER STEEL DECK PROFILE

STEEL DECK ATTACHMENT SCHEDULE

MARK	WELDED			MECHANICAL		
	PERPENDICULAR SUPPORTS	PARALLEL SUPPORTS	SIDE LAP	PERPENDICULAR SUPPORTS	PARALLEL SUPPORTS	SIDE LAP
SDA-1	PW @ _/_	PW @ __" O.C.	PSC @ __" O.C.	PAF @ _/_	PAF @ __" O.C.	PSC @ __" O.C.
SDA-2	PW @ _/_	PW @ __" O.C.	1.1/2" TSW @ __" O.C.	PAF @ _/_	PAF @ __" O.C.	PSC @ __" O.C.
SDA-3	PW @ 36/4	PW @ 24" O.C.	PSC @ 36" O.C.	PAF @ 36/4	PAF @ 18" O.C.	PSC @ 36" O.C.
SDA-4	PW @ _/_	PW @ __" O.C.	1.1/2" TSW @ __" O.C.	PAF @ _/_	PAF @ __" O.C.	PSC @ __" O.C.

NOTES:
1. PW = PUDDLE WELD - 1/2" EFFECTIVE DIAMETER (3/4" VISIBLE DIAMETER) ARC SPOT WELD, 1" X 3/8" EFFECTIVE ARC SEAM WELD AT SUPPORTS ADJACENT TO SIDELAP.
2. TSW = TOP SEAM WELD - 1.1/2" LONG TOP SEAM WELDS BETWEEN ADJACENT DECK PANELS. CRIMP SIDE SEAMS BEFORE WELDING INTERLOCKING SEAMS.
3. PAF = POWDER ACTUATED FASTENER USED AS BASIS OF DESIGN. SEE NOTE 12 FOR ALTERNATE CONNECTIONS.
   HILTI X-HSN 24 AT SUPPORTS 3/16" THROUGH 3/8" THICK
   HILTI X-ENP-19 L15 AT SUPPORTS 1/4" THICK AND GREATER
4. PSC = PROPRIETARY SIDELAP CONNECTION - USED AS BASIS OF DESIGN, VERCO PUNCHLOK II. SEE NOTE 10 FOR ALTERNATE CONNECETIONS.
5. SPACING AT SUPPORTS IS NOTED AS (DECK PANEL WIDTH)/(ATTACHMENTS PER PANEL). FOR EXAMPLE: PW @ 36/4 INDICATES A 36" WIDE DECK PANEL WITH 4 PUDDLE WELDS AT EACH SUPPORT.
6. HEADED STUD ANCHORS WELDED THROUGH DECK WITH 1.1/8" MINIMUM COVER FROM EDGE OF DECK TO STUD CENTERLINE MAY BE SUBSTITUTED ONE FOR ONE FOR PW.
7. SEE PLANS FOR ADDITIONAL FASTENERS REQUIRED AT MEMBERS DENOTED AS LFRS (§). OMIT ATTACHMENTS IN THE PROTECTED ZONE AND PROVIDE ADDITIONAL ATTACHMENTS OUTSIDE THE PROTECTED ZONE.
8. ALL WELDED SURFACES SHALL BE DRY BEFORE WELDING DECK OR STUDS TO SUPPORTS.
9. ALIGN AND SECURE DECK IN POSITION BEFORE WELDING OR INSTALLING FASTENERS OR STUDS.
10. ALTERNATE MEANS OF DECK ATTACHMENT ARE PERMITTED WITH APPROVAL OF THE ENGINEER. THE CONTRACTOR SHALL SUBMIT THE PROPOSED ATTACHMENT SYSTEM AND THE CODE EVALUATION REPORT DEMONSTRATING THE SYSTEM HAS THE STRENGTH TO MEET THE SPECIFIED DECK SHEAR. IF THE ALTERNATE METHOD IS APPROVED, IT IS THE RESPONSIBILITY OF THE CONTRACTOR TO ENSURE THAT THE DECK TYPE AND PROFILE IS COMPATIBLE WITH THE FASTENING SYSTEM.
11. DECK PANELS SHALL HAVE 2.1/4" MINIMUM BEARING ON ALL SUPPORTING MEMBERS. PROVIDE ADDITIONAL 1.1/2" MINIMUM BEARING FOR TWO ROWS OF ATTACHMENTS AT PERPENDICULAR SUPPORTS.
12. ATTACHMENTS SHALL HAVE A MINIMUM DECK EDGE DISTANCE OF 1.1/8", MINIMUM SPACING OF 1.1/2" BETWEEN ROWS OF ATTACHMENTS, AND MINIMUM SUPPORT FLANGE EDGE DISTANCE OF 1.1/8".
13. DECK PANEL ENDS SHALL OVERLAP EACH OTHER A MINIMMUM OF 2.1/4" AT SUPPORTS AND THE ATTACHMENT SHALL GO THROUGH BOTH PANELS TO THE SUPPORT BELOW. PROVIDE ADDITIONAL 1.1/2" MINIMUM OVERLAP FOR TWO ROWS OF ATTACHMENTS AT PERPENDICULAR SUPPORTS.

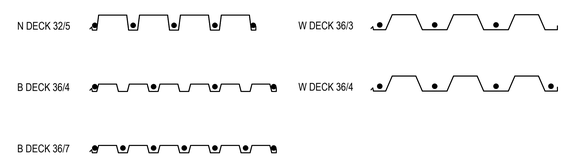

SNOW DRIFT SCHEDULE

MARK	DRIFT LENGTH	WD (PSF)

NOTES:
1. FOR OWSJ DESIGN DRIFT LOADS SHALL BE IN ADDITION TO ALL LOADS INDICATED ON PLANS.
2. SNOW DRIFT VALUES IN SCHEDULE ARE IN UNITS OF PSF. MULTIPLY LOADS BY JOIST SPACING TO OBTAIN PLF LOADING FOR JOIST DESIGN.

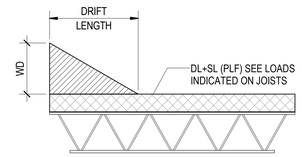

D5 / SF604 SNOW DRIFT SCHEDULE
NO SCALE

HKS

ARCHITECT
HKS ARCHITECTS, INC.
90 SOUTH 400 WEST, #110
SALT LAKE CITY, UTAH 84101

CIVIL ENGINEER
GREAT BASIN ENGINEERING, INC
5746 SOUTH 1475 EAST
OGDEN, UTAH 84403

LANDSCAPE ARCHITECT
MGB+A STUDIO
145 WEST 200 SOUTH
SALT LAKE CITY, UTAH 84101

STRUCTURAL ENGINEER
REAVELEY ENGINEERS
250 EAST 200 SOUTH, SUITE 1000
SALT LAKE CITY, UTAH 84111

M/P/FP ENGINEER
RESOLUT GROUP
181 EAST 5600 SOUTH, SUITE 200
MURRAY, UTAH 84107

E/T ENGINEER
LYNK ENGINEERS
324 SOUTH STATE STREET, SUITE 400
SALT LAKE CITY, UTAH 84111

Intermountain Health

UTAH VALLEY SPORTS PERFORMANCE CENTER

PROJECT ADDRESS: WEST 880 NORTH 200 WEST PROVO, UTAH 84604

SEAL & SIGNATURE

KEY PLAN

REVISION

NO.	DESCRIPTION	DATE

HKS PROJECT NUMBER
27487.000

DATE
08/26/2026

ISSUE
DESIGN DEVELOPMENT

SHEET TITLE
STEEL DECK SCHEDULES

SHEET NO.
SF604

© HKS, INC.

TITLE BLOCK VERSION: 20210930
MODEL: Autodesk Docs://27487.000_IH-UV Sports Performance Center 2025/S_IH-UV_Sports-Performance-Center_2025.rvt
PRINT DATE: 8/26/2026 5:20:13 PM TEMPLATE VERSION:

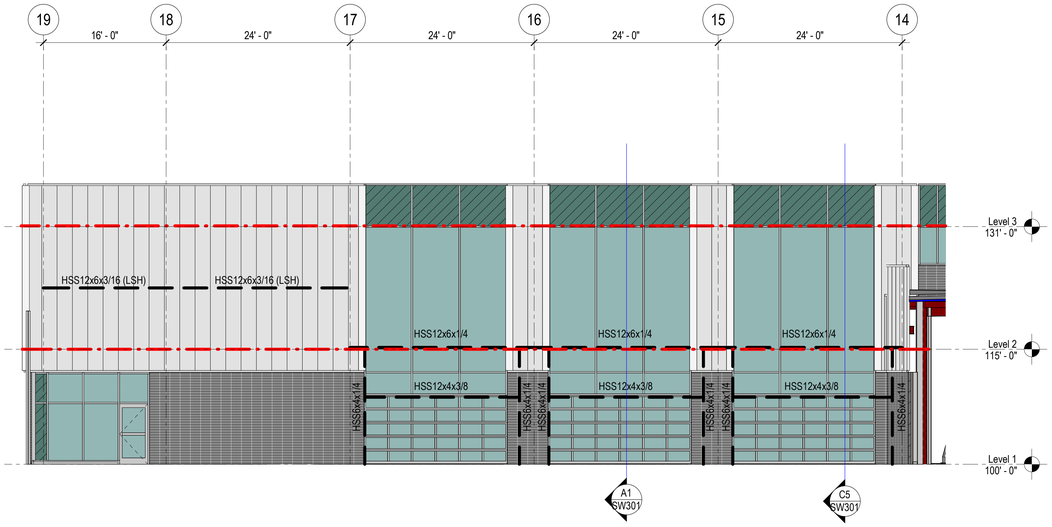

D1 / SW201 STEEL STUD WALL ELEVATION - NORTH

SCALE: 1/8" = 1'-0"

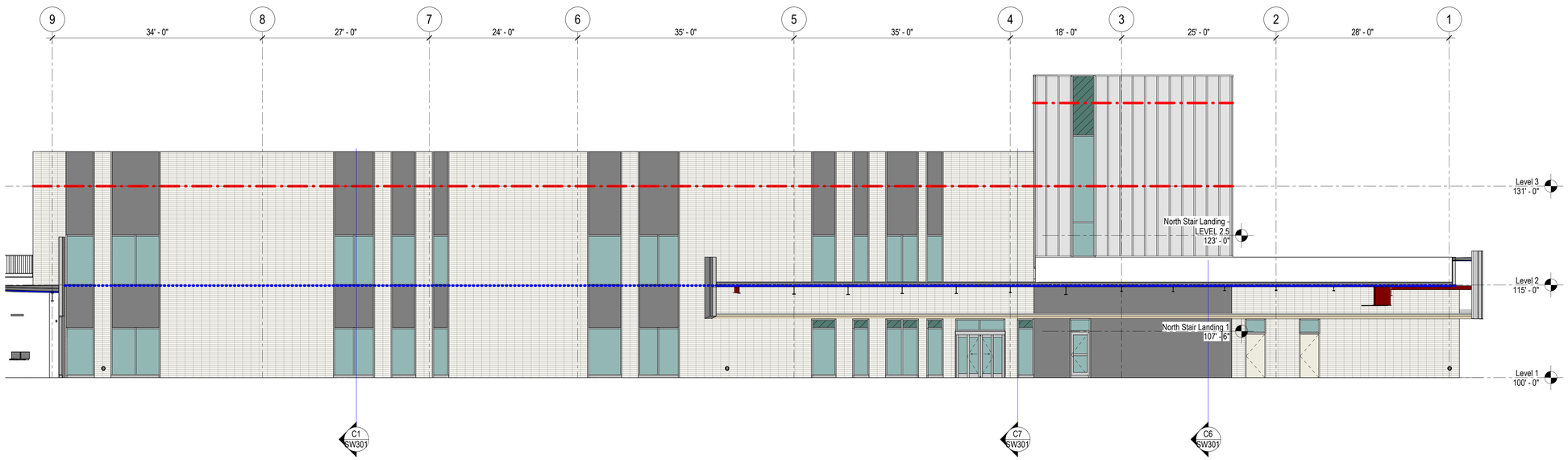

C1 / SW201 STEEL STUD WALL ELEVATION - NORTH

SCALE: 1/8" = 1'-0"

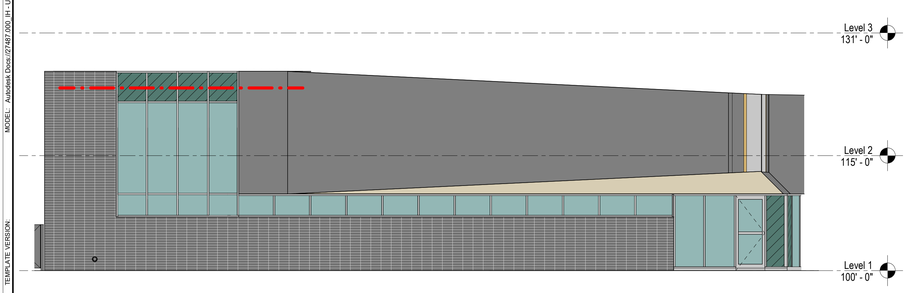

B1 / SW201 STEEL STUD WALL ELEVATION - NORTH

SCALE: 1/8" = 1'-0"

EXTERIOR WALL ELEVATION LEGEND

- -STEEL STUD BYPASS W/ VERTICAL DEFLECTION CLIPS AND DRIFT TRACKS
- -STEEL STACKED STUD W/ VERTICAL DEFLECTION CLIPS AND DRIFT TRACKS
- WIND GIRT BEHIND
- A - INDICATES OPENING TYPE
- X - STEEL STUD WALL TYPE SEE SCHEDULE ON SW601 USE TYPE 1 TYP U.N.O.

EXTERIOR WALL ELEVATION NOTES

1. SEE FOR TYPICAL WALL ELEVATION. SEE GENERAL NOTES FOR STEEL STUD REQUIREMENTS.
2. SEE SW601 SHEETS FOR STEEL STUD SCHEDULES & JAMB, SILL & HEADER DETAILS.
3. CURTAIN WALL SHALL BE DESIGNED TO ACCOMMODATE STORY DRIFT AT THE INDICATED LOCATIONS. SEE INTERSTORY DRIFT TABLES IN THE GENERAL STRUCTURAL NOTES.
4. JOINT LOCATIONS ARE APPROXIMATE. COORDINATE LOCATIONS WITH THE ARCHITECTURAL CLADDING ELEMENTS.

HKS

ARCHITECT
HKS ARCHITECTS, INC.
90 SOUTH 400 WEST, #110
SALT LAKE CITY, UTAH 84101

CIVIL ENGINEER
GREAT BASIN ENGINEERING, INC
5746 SOUTH 1475 EAST
OGDEN, UTAH 84403

LANDSCAPE ARCHITECT
MGB+A STUDIO
145 WEST 200 SOUTH
SALT LAKE CITY, UTAH 84101

STRUCTURAL ENGINEER
REAVELEY ENGINEERS
250 EAST 200 SOUTH, SUITE 1000
SALT LAKE CITY, UTAH 84111

M/P/FP ENGINEER
RESOLUT GROUP
181 EAST 5600 SOUTH, SUITE 200
MURRAY, UTAH 84107

E/T ENGINEER
LYNK ENGINEERS
324 SOUTH STATE STREET, SUITE 400
SALT LAKE CITY, UTAH 84111

Intermountain Health

UTAH VALLEY SPORTS PERFORMANCE CENTER

PROJECT ADDRESS: WEST 880 NORTH 200 WEST PROVO, UTAH 84604

SEAL & SIGNATURE

KEY PLAN

REVISION

NO.	DESCRIPTION	DATE

HKS PROJECT NUMBER
27487.000

DATE
08/26/2026

ISSUE
DESIGN DEVELOPMENT

SHEET TITLE
EXTERIOR CLADDING ELEVATIONS

SHEET NO.
SW201

© HKS, INC.

TITLE BLOCK VERSION: 20210930
MODEL: Autodesk Docs://27487.000_IH_UV Sports Performance Center_2025/S IH-UV Sports Performance Center_2025.rvt
PRINT DATE: 8/26/2026 5:20:15 PM TEMPLATE VERSION:

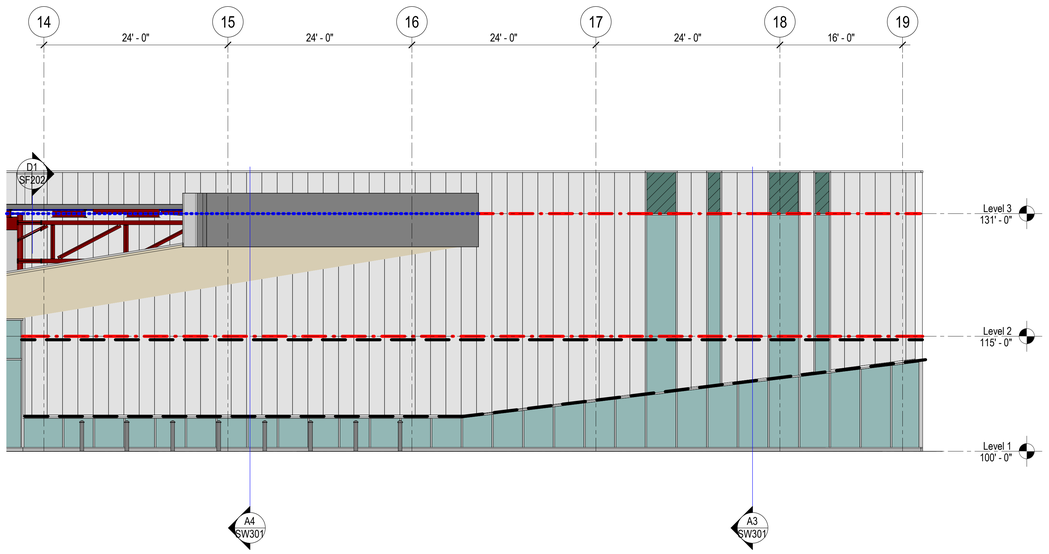

D1 SW202 STEEL STUD WALL ELEVATION - SOUTH

SCALE: 1/8" = 1'-0"

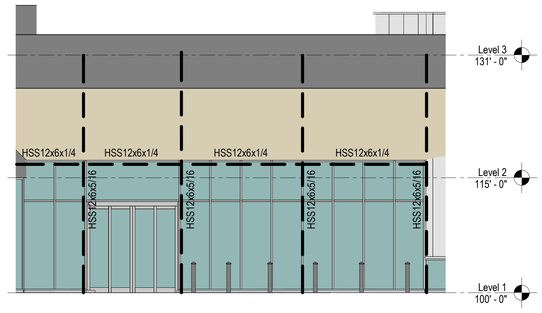

D2 SW202 STEEL STUD WALL ELEVATION - SOUTH

SCALE: 1/8" = 1'-0"

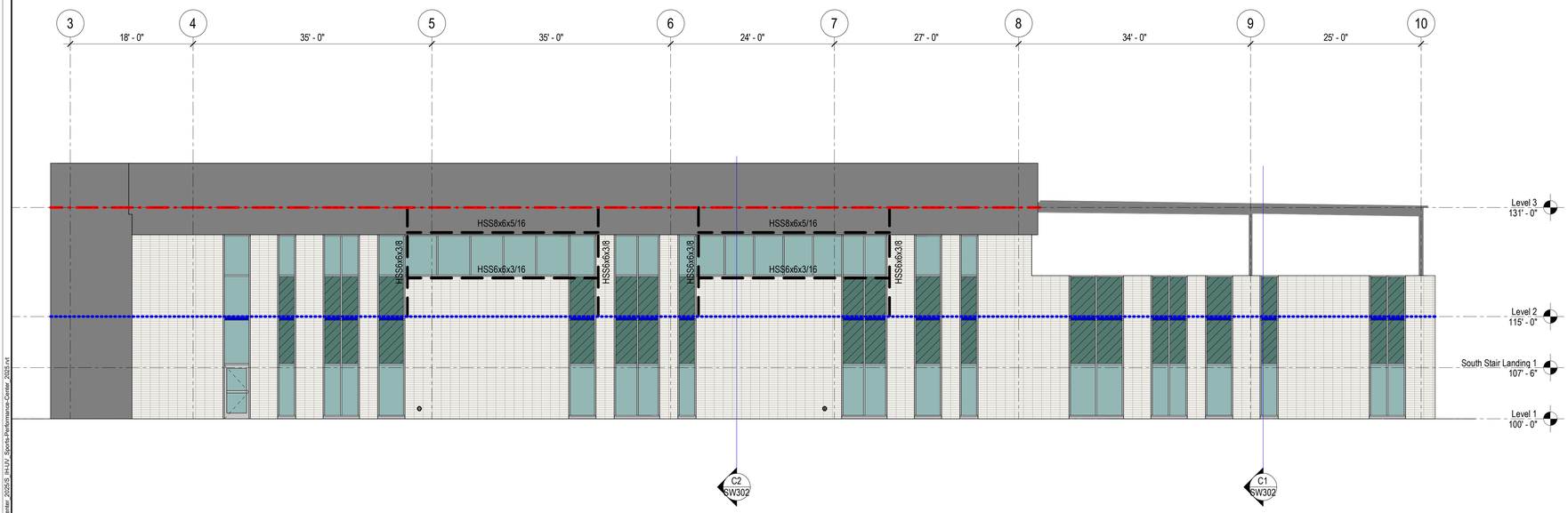

C1 SW202 STEEL STUD WALL ELEVATION - SOUTH

SCALE: 1/8" = 1'-0"

EXTERIOR WALL ELEVATION LEGEND

-·-·-	-STEEL STUD BYPASS W/ VERTICAL DEFLECTION CLIPS AND DRIFT TRACKS
·····	-STEEL STACKED STUD W/ VERTICAL DEFLECTION CLIPS AND DRIFT TRACKS
— — —	- WIND GIRT BEHIND
A	- INDICATES OPENING TYPE
X	- STEEL STUD WALL TYPE SEE SCHEDULE ON SW601 USE TYPE 1 TYP U.N.O.

EXTERIOR WALL ELEVATION NOTES

1. SEE FOR TYPICAL WALL ELEVATION. SEE GENERAL NOTES FOR STEEL STUD REQUIREMENTS.
2. SEE SW601 SHEETS FOR STEEL STUD SCHEDULES & JAMB, SILL & HEADER DETAILS.
3. CURTAIN WALL SHALL BE DESIGNED TO ACCOMMODATE STORY DRIFT AT THE INDICATED LOCATIONS. SEE INTERSTORY DRIFT TABLES IN THE GENERAL STRUCTURAL NOTES.
4. JOINT LOCATIONS ARE APPROXIMATE. COORDINATE LOCATIONS WITH THE ARCHITECTURAL CLADDING ELEMENTS.

HKS

ARCHITECT
HKS ARCHITECTS, INC.
90 SOUTH 400 WEST, #110
SALT LAKE CITY, UTAH 84101

CIVIL ENGINEER
GREAT BASIN ENGINEERING, INC
5746 SOUTH 1475 EAST
OGDEN, UTAH 84403

LANDSCAPE ARCHITECT
MGB+A STUDIO
145 WEST 200 SOUTH
SALT LAKE CITY, UTAH 84101

STRUCTURAL ENGINEER
REAVELEY ENGINEERS
250 EAST 200 SOUTH, SUITE 1000
SALT LAKE CITY, UTAH 84111

M/P/FP ENGINEER
RESOLUT GROUP
181 EAST 5600 SOUTH, SUITE 200
MURRAY, UTAH 84107

E/T ENGINEER
LYNK ENGINEERS
324 SOUTH STATE STREET, SUITE 400
SALT LAKE CITY, UTAH 84111

Intermountain Health

UTAH VALLEY SPORTS PERFORMANCE CENTER

PROJECT ADDRESS: WEST 880 NORTH 200 WEST PROVO, UTAH 84604

SEAL & SIGNATURE

KEY PLAN

REVISION

NO.	DESCRIPTION	DATE

HKS PROJECT NUMBER
27487.000

DATE
08/26/2026

ISSUE
DESIGN DEVELOPMENT

SHEET TITLE
EXTERIOR CLADDING ELEVATIONS

SHEET NO.
SW202

© HKS, INC.

TITLE BLOCK VERSION: 20210930
MODEL: Autodesk Docs://27487.000_H - UV Sports Performance Center_2025/S_H-UV_Sports Performance Center_2025.rvt
PRINT DATE: 8/26/2026 5:20:16 PM TEMPLATE VERSION:

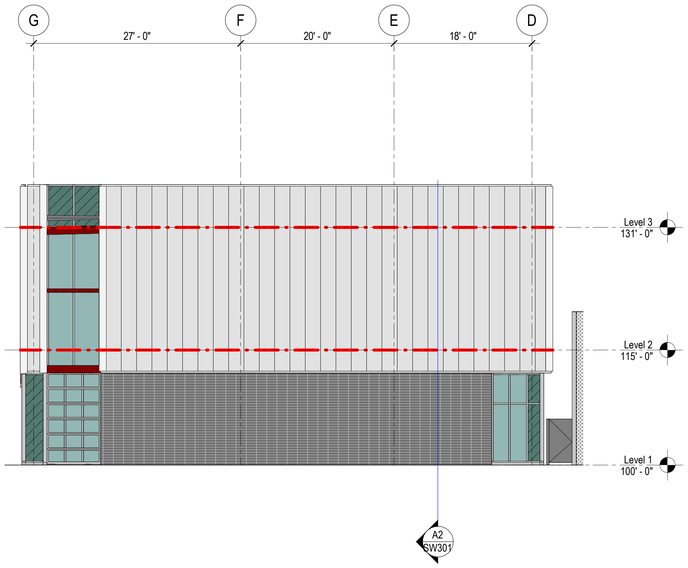

D1 SW203 STEEL STUD WALL ELEVATION - EAST

SCALE: 1/8" = 1'-0"

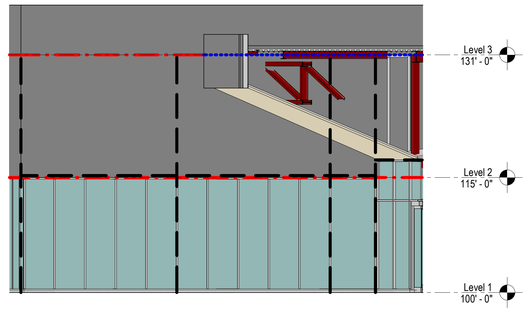

D2 SW203 STEEL STUD WALL ELEVATION - EAST

SCALE: 1/8" = 1'-0"

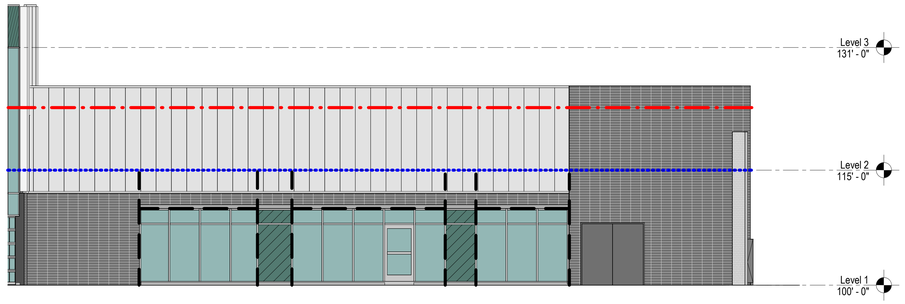

C1 SW203 STEEL STUD WALL ELEVATION - EAST

SCALE: 1/8" = 1'-0"

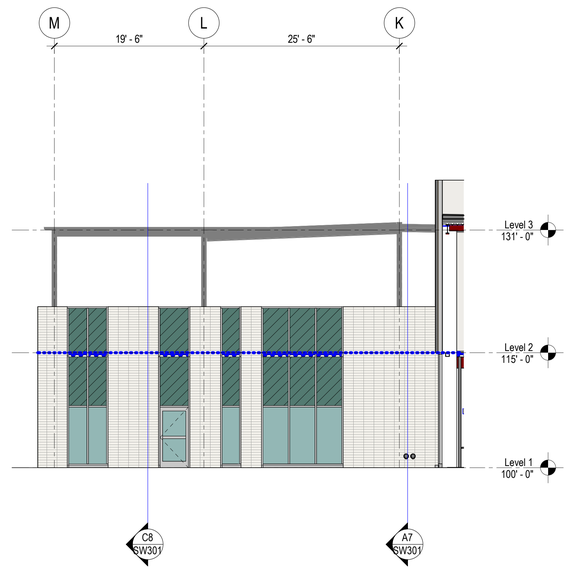

C2 SW203 STEEL STUD WALL ELEVATION - EAST

SCALE: 1/8" = 1'-0"

EXTERIOR WALL ELEVATION LEGEND

- -STEEL STUD BYPASS W/ VERTICAL DEFLECTION CLIPS AND DRIFT TRACKS
- -STEEL STACKED STUD W/ VERTICAL DEFLECTION CLIPS AND DRIFT TRACKS
- WIND GIRT BEHIND
- A - INDICATES OPENING TYPE
- X - STEEL STUD WALL TYPE SEE SCHEDULE ON SW601 USE TYPE 1 TYP U.N.O.

EXTERIOR WALL ELEVATION NOTES

1. SEE FOR TYPICAL WALL ELEVATION. SEE GENERAL NOTES FOR STEEL STUD REQUIREMENTS.
2. SEE SW601 SHEETS FOR STEEL STUD SCHEDULES & JAMB, SILL & HEADER DETAILS.
3. CURTAIN WALL SHALL BE DESIGNED TO ACCOMMODATE STORY DRIFT AT THE INDICATED LOCATIONS. SEE INTERSTORY DRIFT TABLES IN THE GENERAL STRUCTURAL NOTES.
4. JOINT LOCATIONS ARE APPROXIMATE. COORDINATE LOCATIONS WITH THE ARCHITECTURAL CLADDING ELEMENTS.

HKS

ARCHITECT
HKS ARCHITECTS, INC.
90 SOUTH 400 WEST, #110
SALT LAKE CITY, UTAH 84101

CIVIL ENGINEER
GREAT BASIN ENGINEERING, INC
5746 SOUTH 1475 EAST
OGDEN, UTAH 84403

LANDSCAPE ARCHITECT
MGB+A STUDIO
145 WEST 200 SOUTH
SALT LAKE CITY, UTAH 84101

STRUCTURAL ENGINEER
REAVELEY ENGINEERS
250 EAST 200 SOUTH, SUITE 1000
SALT LAKE CITY, UTAH 84111

M/P/FP ENGINEER
RESOLUT GROUP
181 EAST 5600 SOUTH, SUITE 200
MURRAY, UTAH 84107

E/T ENGINEER
LYNK ENGINEERS
324 SOUTH STATE STREET, SUITE 400
SALT LAKE CITY, UTAH 84111

Intermountain Health

UTAH VALLEY SPORTS PERFORMANCE CENTER

PROJECT ADDRESS: WEST 880 NORTH 200 WEST PROVO, UTAH 84604

SEAL & SIGNATURE

KEY PLAN

REVISION

NO.	DESCRIPTION	DATE

HKS PROJECT NUMBER
27487.000

DATE
08/26/2026

ISSUE
DESIGN DEVELOPMENT

SHEET TITLE
EXTERIOR CLADDING ELEVATIONS

SHEET NO.
SW203

© HKS, INC.

TITLE BLOCK VERSION: 2021.0930
PRINT DATE: 8/26/2026 5:20:17 PM TEMPLATE VERSION: MODEL: Autodesk Docs://27487.000_IH - UV Sports Performance Center_2025/S_IH-UV_Sports Performance Center_2025.rvt

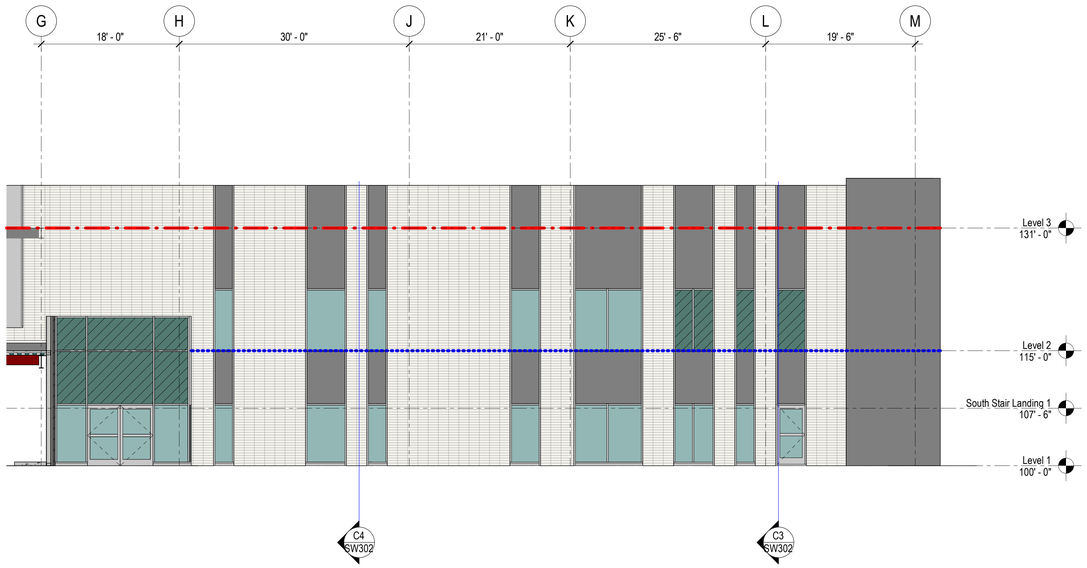

D1 SW204 STEEL STUD WALL ELEVATION - WEST

SCALE: 1/8" = 1'-0"

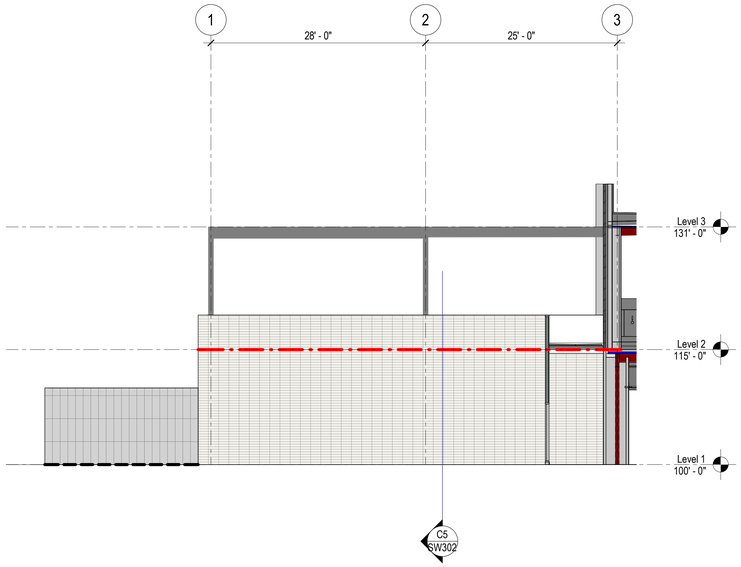

D2 SW204 STEEL STUD WALL ELEVATION - WEST

SCALE: 1/8" = 1'-0"

C1 SW204 STEEL STUD WALL ELEVATION - WEST

SCALE: 1/8" = 1'-0"

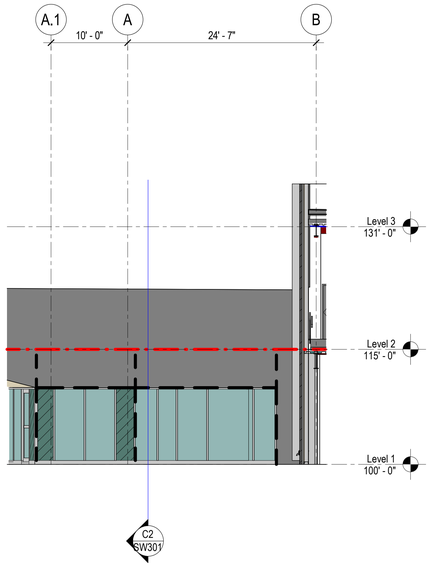

C2 SW204 STEEL STUD WALL ELEVATION - WEST

SCALE: 1/8" = 1'-0"

EXTERIOR WALL ELEVATION LEGEND

-·-·-	-STEEL STUD BYPASS W/ VERTICAL DEFLECTION CLIPS AND DRIFT TRACKS
·····	-STEEL STACKED STUD W/ VERTICAL DEFLECTION CLIPS AND DRIFT TRACKS
— — —	- WIND GIRT BEHIND
A	- INDICATES OPENING TYPE
X	- STEEL STUD WALL TYPE SEE SCHEDULE ON SW601 USE TYPE 1 TYP U.N.O.

EXTERIOR WALL ELEVATION NOTES

1. SEE FOR TYPICAL WALL ELEVATION. SEE GENERAL NOTES FOR STEEL STUD REQUIREMENTS.
2. SEE SW601 SHEETS FOR STEEL STUD SCHEDULES & JAMB, SILL & HEADER DETAILS.
3. CURTAIN WALL SHALL BE DESIGNED TO ACCOMMODATE STORY DRIFT AT THE INDICATED LOCATIONS. SEE INTERSTORY DRIFT TABLES IN THE GENERAL STRUCTURAL NOTES.
4. JOINT LOCATIONS ARE APPROXIMATE. COORDINATE LOCATIONS WITH THE ARCHITECTURAL CLADDING ELEMENTS.

HKS

ARCHITECT
HKS ARCHITECTS, INC.
90 SOUTH 400 WEST, #110
SALT LAKE CITY, UTAH 84101

CIVIL ENGINEER
GREAT BASIN ENGINEERING, INC
5746 SOUTH 1475 EAST
OGDEN, UTAH 84403

LANDSCAPE ARCHITECT
MGB+A STUDIO
145 WEST 200 SOUTH
SALT LAKE CITY, UTAH 84101

STRUCTURAL ENGINEER
REAVELEY ENGINEERS
250 EAST 200 SOUTH, SUITE 1000
SALT LAKE CITY, UTAH 84111

M/P/FP ENGINEER
RESOLUT GROUP
181 EAST 5600 SOUTH, SUITE 200
MURRAY, UTAH 84107

E/T ENGINEER
LYNK ENGINEERS
324 SOUTH STATE STREET, SUITE 400
SALT LAKE CITY, UTAH 84111

Intermountain Health

UTAH VALLEY SPORTS PERFORMANCE CENTER

PROJECT ADDRESS: WEST 880 NORTH 200 WEST PROVO, UTAH 84604

SEAL & SIGNATURE

KEY PLAN

REVISION

NO.	DESCRIPTION	DATE

HKS PROJECT NUMBER
27487.000

DATE
08/26/2026

ISSUE
DESIGN DEVELOPMENT

SHEET TITLE
EXTERIOR CLADDING ELEVATIONS

SHEET NO.
SW204

© HKS, INC.

TITLE BLOCK VERSION: 20210930
MODEL: Autodesk Docs://27487.000_IH_UV Sports Performance Center_2025/S_IH-UV_Sports-Performance-Center_2025.rvt
PRINT DATE: 8/26/2026 5:20:19 PM TEMPLATE VERSION:

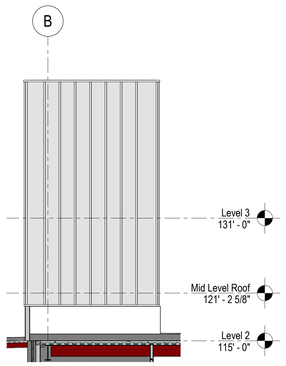

D1 SW205 SSW - HIGH ROOF - 1

SCALE: 1/8" = 1'-0"

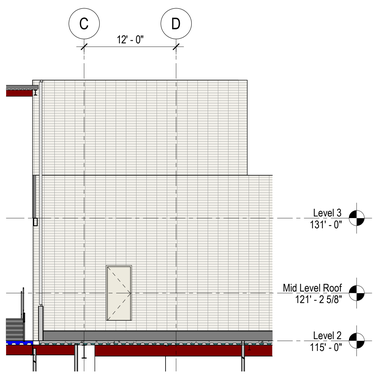

D2 SW205 SSW - HIGH ROOF - 2

SCALE: 1/8" = 1'-0"

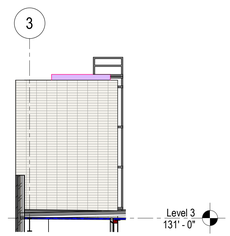

D3 SW205 SSW - HIGH ROOF - 5

SCALE: 1/8" = 1'-0"

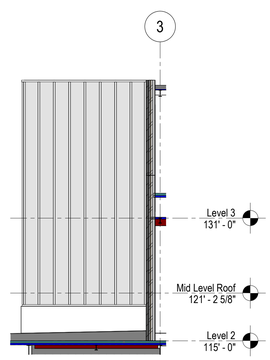

D4 SW205 SSW - HIGH ROOF - 4

SCALE: 1/8" = 1'-0"

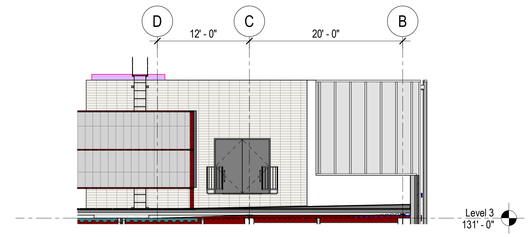

D5 SW205 SSW - HIGH ROOF - 3

SCALE: 1/8" = 1'-0"

HKS

ARCHITECT
HKS ARCHITECTS, INC.
90 SOUTH 400 WEST, #110
SALT LAKE CITY, UTAH 84101

CIVIL ENGINEER
GREAT BASIN ENGINEERING, INC
5746 SOUTH 1475 EAST
OGDEN, UTAH 84403

LANDSCAPE ARCHITECT
MGB+A STUDIO
145 WEST 200 SOUTH
SALT LAKE CITY, UTAH 84101

STRUCTURAL ENGINEER
REAVELEY ENGINEERS
250 EAST 200 SOUTH, SUITE 1000
SALT LAKE CITY, UTAH 84111

M/P/FP ENGINEER
RESOLUT GROUP
181 EAST 5600 SOUTH, SUITE 200
MURRAY, UTAH 84107

E/T ENGINEER
LYNK ENGINEERS
324 SOUTH STATE STREET, SUITE 400
SALT LAKE CITY, UTAH 84111

Intermountain Health

UTAH VALLEY SPORTS PERFORMANCE CENTER

PROJECT ADDRESS: WEST 880 NORTH 200 WEST PROVO, UTAH 84604

SEAL & SIGNATURE

KEY PLAN

REVISION

NO.	DESCRIPTION	DATE

HKS PROJECT NUMBER
27487.000

DATE
08/26/2026

ISSUE
DESIGN DEVELOPMENT

SHEET TITLE
EXTERIOR CLADDING ELEVATIONS

SHEET NO.
SW205

© HKS, INC.

TITLE BLOCK VERSION: 20210930
MODEL: Autodesk Docs://27487.000_IH-UV Sports Performance Center 2025/S_IH-UV_Sports-Performance-Center_2025.rvt
PRINT DATE: 8/26/2026 5:29:21 PM TEMPLATE VERSION:

C1 SS SECTION - NORTH
SW301 SCALE: 1/4" = 1'-0"

C2 SS SECTION - NORTH
SW301 SCALE: 1/4" = 1'-0"

C3 SS SECTION - NORTH
SW301 SCALE: 1/4" = 1'-0"

C4 SS SECTION - NORTH
SW301 SCALE: 1/4" = 1'-0"

C5 SS SECTION - NORTH
SW301 SCALE: 1/4" = 1'-0"

C6 SS SECTION - NORTH
SW301 SCALE: 1/4" = 1'-0"

C7 SS SECTION - NORTH
SW301 SCALE: 1/4" = 1'-0"

A1 SS SECTION - EAST
SW301 SCALE: 1/4" = 1'-0"

A2 SS SECTION - EAST
SW301 SCALE: 1/4" = 1'-0"

A3 SS SECTION - EAST
SW301 SCALE: 1/4" = 1'-0"

A4 SS SECTION - EAST
SW301 SCALE: 1/4" = 1'-0"

A5 SS SECTION - EAST
SW301 SCALE: 1/4" = 1'-0"

A6 SS SECTION - EAST
SW301 SCALE: 1/4" = 1'-0"

A7 SS SECTION - EAST
SW301 SCALE: 1/4" = 1'-0"

C8 SS SECTION - EAST
SW301 SCALE: 1/4" = 1'-0"

HKS

ARCHITECT
HKS ARCHITECTS, INC.
90 SOUTH 400 WEST, #110
SALT LAKE CITY, UTAH 84101

CIVIL ENGINEER
GREAT BASIN ENGINEERING, INC
5746 SOUTH 1475 EAST
OGDEN, UTAH 84403

LANDSCAPE ARCHITECT
MGB+A STUDIO
145 WEST 200 SOUTH
SALT LAKE CITY, UTAH 84101

STRUCTURAL ENGINEER
REAVELEY ENGINEERS
250 EAST 200 SOUTH, SUITE 1000
SALT LAKE CITY, UTAH 84111

M/P/FP ENGINEER
RESOLUT GROUP
181 EAST 5600 SOUTH, SUITE 200
MURRAY, UTAH 84107

E/T ENGINEER
LYNK ENGINEERS
324 SOUTH STATE STREET, SUITE 400
SALT LAKE CITY, UTAH 84111

Intermountain Health

UTAH VALLEY SPORTS PERFORMANCE CENTER

PROJECT ADDRESS: WEST 880 NORTH 200 WEST PROVO, UTAH 84604

SEAL & SIGNATURE

KEY PLAN

REVISION

NO.	DESCRIPTION	DATE

HKS PROJECT NUMBER
27487.000

DATE
08/26/2026

ISSUE
DESIGN DEVELOPMENT

SHEET TITLE
EXTERIOR CLADDING SECTIONS

SHEET NO.
SW301

© HKS, INC.

TITLE BLOCK VERSION: 20210930
MODEL: Autodesk Docs://27487.000_H+_UV Sports Performance Center_2026/S_H+UV_Sports-Performance-Center_2026.rvt
PRINT DATE: 8/26/2026 5:20:23 PM TEMPLATE VERSION:

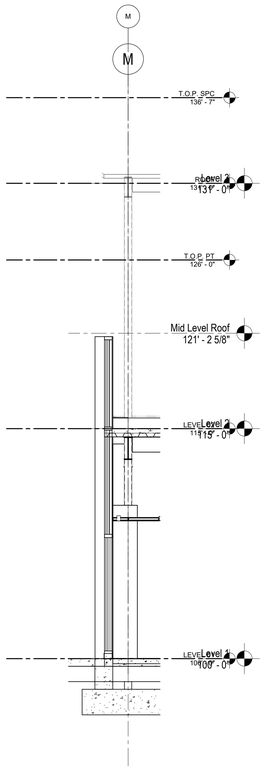

C1 SW302 SS SECTION - SOUTH
SCALE: 1/4" = 1'-0"

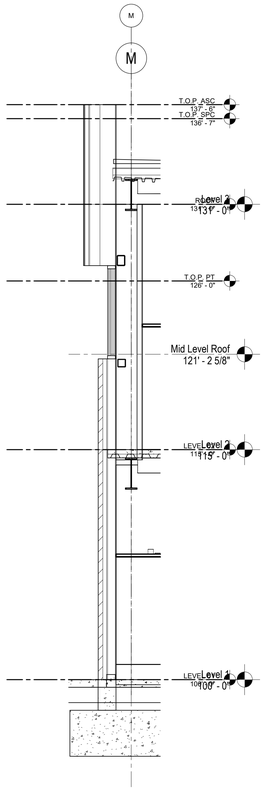

C2 SW302 SS SECTION - SOUTH
SCALE: 1/4" = 1'-0"

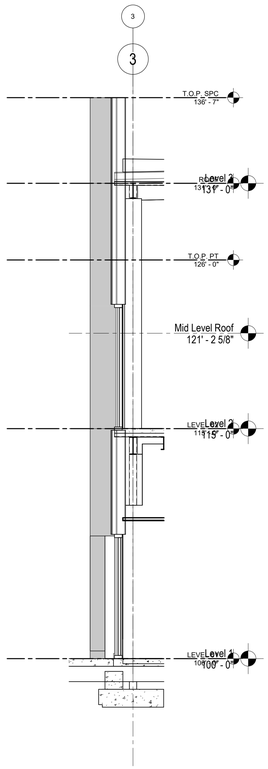

C3 SW302 SS SECTION - WEST
SCALE: 1/4" = 1'-0"

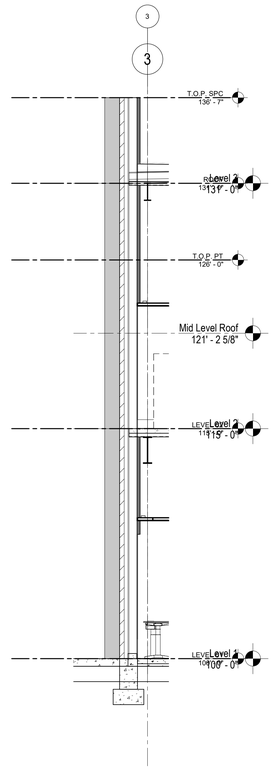

C4 SW302 SS SECTION - WEST
SCALE: 1/4" = 1'-0"

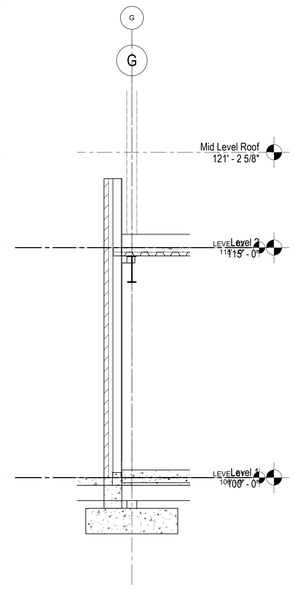

C5 SW302 SS SECTION - WEST
SCALE: 1/4" = 1'-0"

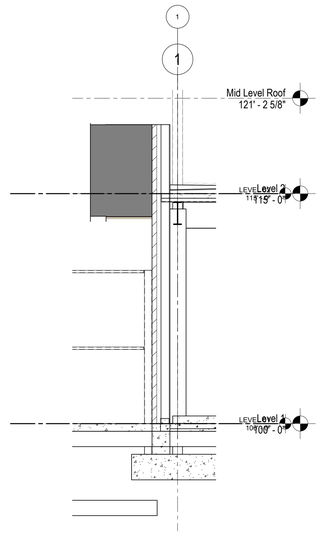

C6 SW302 SS SECTION - WEST
SCALE: 1/4" = 1'-0"

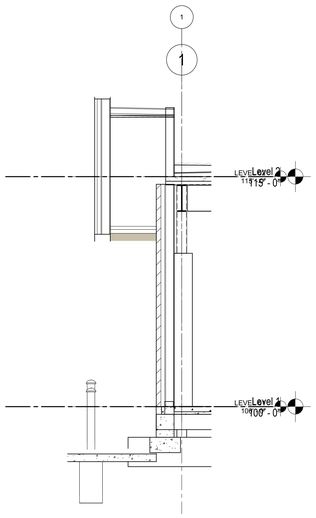

C7 SW302 SS SECTION - WEST
SCALE: 1/4" = 1'-0"

© HKS, INC.

HKS

ARCHITECT
HKS ARCHITECTS, INC.
90 SOUTH 400 WEST, #110
SALT LAKE CITY, UTAH 84101

CIVIL ENGINEER
GREAT BASIN ENGINEERING, INC
5746 SOUTH 1475 EAST
OGDEN, UTAH 84403

LANDSCAPE ARCHITECT
MGB+A STUDIO
145 WEST 200 SOUTH
SALT LAKE CITY, UTAH 84101

STRUCTURAL ENGINEER
REAVELEY ENGINEERS
250 EAST 200 SOUTH, SUITE 1000
SALT LAKE CITY, UTAH 84111

M/P/FP ENGINEER
RESOLUT GROUP
181 EAST 5600 SOUTH, SUITE 200
MURRAY, UTAH 84107

E/T ENGINEER
LYNK ENGINEERS
324 SOUTH STATE STREET, SUITE 400
SALT LAKE CITY, UTAH 84111

Intermountain Health

UTAH VALLEY SPORTS PERFORMANCE CENTER

PROJECT ADDRESS: WEST 880 NORTH 200 WEST PROVO, UTAH 84604

SEAL & SIGNATURE

KEY PLAN

REVISION

NO.	DESCRIPTION	DATE

HKS PROJECT NUMBER
27487.000

DATE
08/26/2026

ISSUE
DESIGN DEVELOPMENT

SHEET TITLE
EXTERIOR CLADDING SECTIONS

SHEET NO.
SW302

TITLE BLOCK VERSION: 20210930
MODEL: Autodesk Docs://27487.000_IH-UV Sports Performance Center_2025/S_IH-UV_Sports-Performance-Center_2025.rvt
PRINT DATE: 8/26/2026 5:20:24 PM TEMPLATE VERSION:

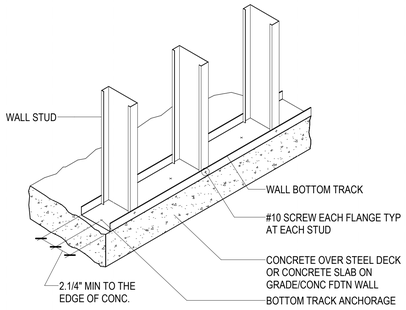

D1 / SW501 TYPICAL BOTTOM TRACK ANCHORAGE DETAILS

NO SCALE

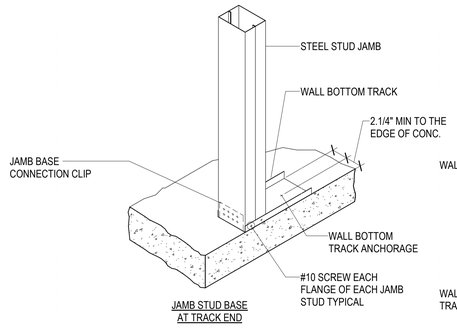

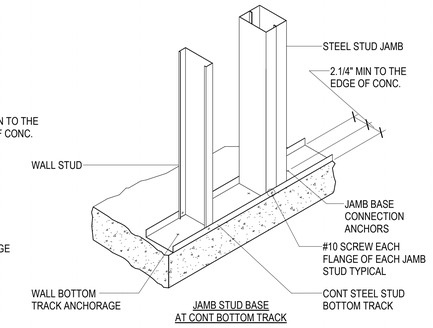

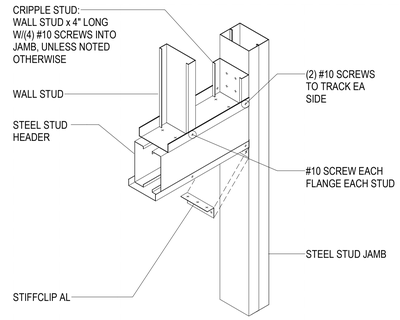

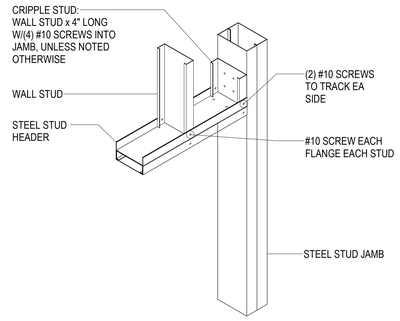

D4 / SW501 TYPICAL HEADER CONNECTION DETAILS

NO SCALE

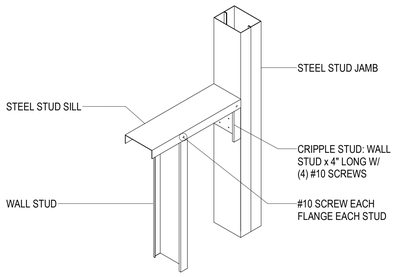

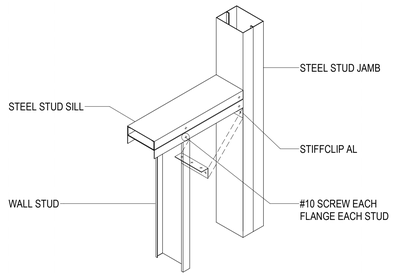

C1 / SW501 TYPICAL SILL CONNECTION DETAILS

NO SCALE

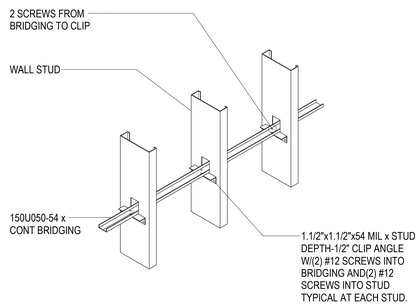

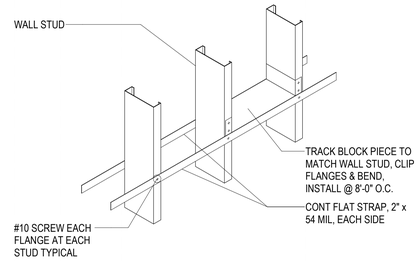

C3 / SW501 TYPICAL STEEL STUD WALL BRIDGING DETAIL

NO SCALE

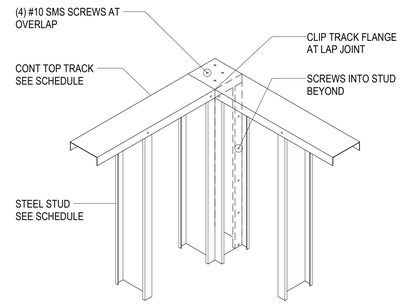

C5 / SW501 TYPICAL WALL FRAMING AT CORNER TRACK LAP CONNECTION

NO SCALE

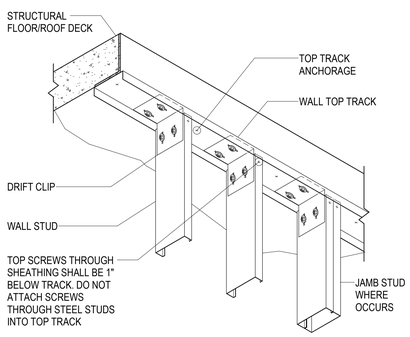

B1 / SW501 TYPICAL STEEL STUD WALL TOP CONNECTION WITH DRIFT CLIP

NO SCALE

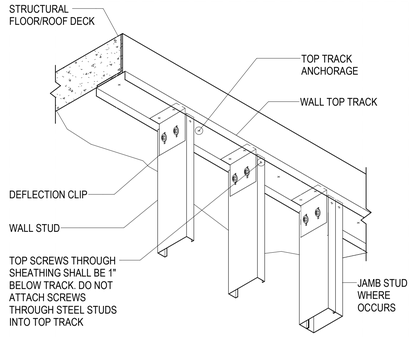

B2 / SW501 TYPICAL STEEL STUD WALL TOP CONNECTION W/ DEFLECTION CLIP

NO SCALE

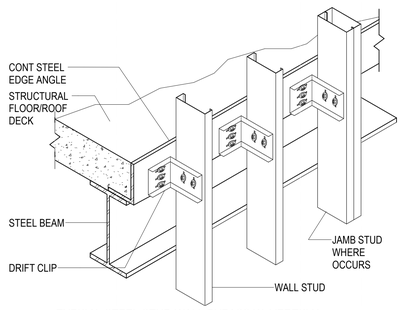

B3 / SW501 TYPICAL STEEL STUD WALL BYPASS W/ VERTICAL DEFLECTION & DRIFT

NO SCALE

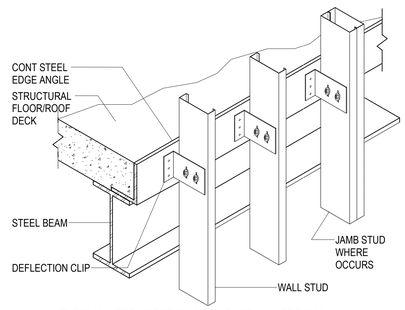

B4 / SW501 TYPICAL STEEL STUD WALL BYPASS W/ VERTICAL DEFLECTION

NO SCALE

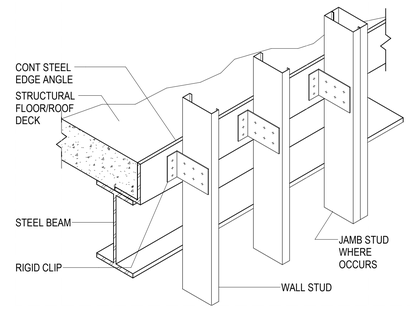

B5 / SW501 TYPICAL STEEL STUD WALL BYPASS W/ SUPPORT

NO SCALE

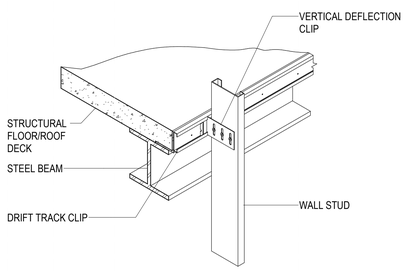

A1 / SW501 TYPICAL STEEL STUD WALL BY-PASS W/ DRIFT L CLIP

NO SCALE

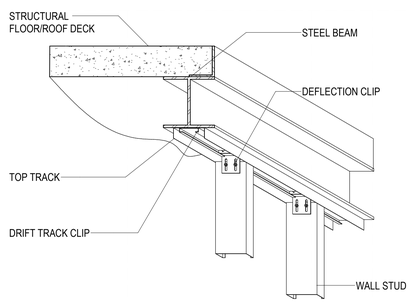

A2 / SW501 TYPICAL STEEL STUD WALL TOP CONNECTION W/ UNDERSIDE DRIFT TRACK CLIP

NO SCALE

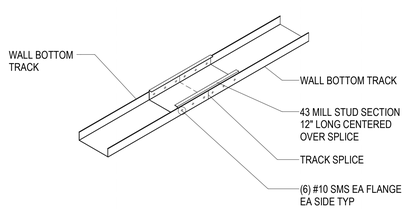

A3 / SW501 TYPICAL TOP AND BOTTOM TRACK SPLICE

NO SCALE

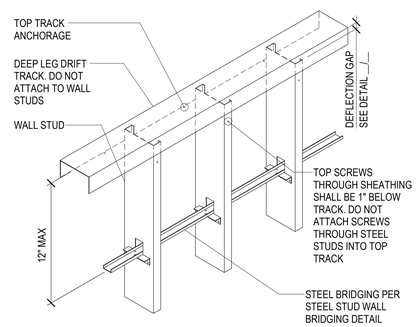

A4 / SW501 TYPICAL STEEL STUD WALL DEEP LEG DRIFT TRACK ASSEMBLY DETAIL

NO SCALE

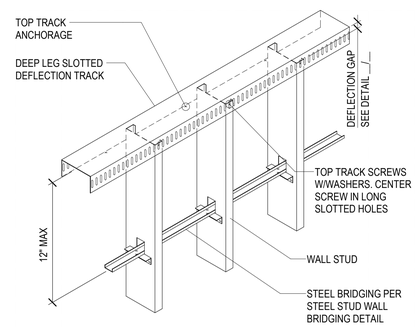

A5 / SW501 TYPICAL STEEL STUD WALL DEEP LEG DEFLECTION TRACK ASSEMBLY DETAIL

NO SCALE

HKS

ARCHITECT
HKS ARCHITECTS, INC.
90 SOUTH 400 WEST, #110
SALT LAKE CITY, UTAH 84101

CIVIL ENGINEER
GREAT BASIN ENGINEERING, INC
5746 SOUTH 1475 EAST
OGDEN, UTAH 84403

LANDSCAPE ARCHITECT
MGB+A STUDIO
145 WEST 200 SOUTH
SALT LAKE CITY, UTAH 84101

STRUCTURAL ENGINEER
REAVELEY ENGINEERS
250 EAST 200 SOUTH, SUITE 1000
SALT LAKE CITY, UTAH 84111

M/P/FP ENGINEER
RESOLUT GROUP
181 EAST 5600 SOUTH, SUITE 200
MURRAY, UTAH 84107

E/T ENGINEER
LYNK ENGINEERS
324 SOUTH STATE STREET, SUITE 400
SALT LAKE CITY, UTAH 84111

Intermountain Health

UTAH VALLEY SPORTS PERFORMANCE CENTER

PROJECT ADDRESS: WEST 880 NORTH 200 WEST PROVO, UTAH 84604

SEAL & SIGNATURE

KEY PLAN

REVISION

NO.	DESCRIPTION	DATE

HKS PROJECT NUMBER
27487.000

DATE
08/26/2026

ISSUE
DESIGN DEVELOPMENT

SHEET TITLE
EXTERIOR STEEL STUD DETAILS (ISOMETRICS)

SHEET NO.
SW501

© HKS, INC.

TITLE BLOCK VERSION: 20210930
MODEL: Autodesk Docs://27487.000_IH - UV Sports Performance Center_2025/S_IH-UV_Sports-Performance-Center_2025.rvt
PRINT DATE: 8/26/2026 5:20:25 PM TEMPLATE VERSION:

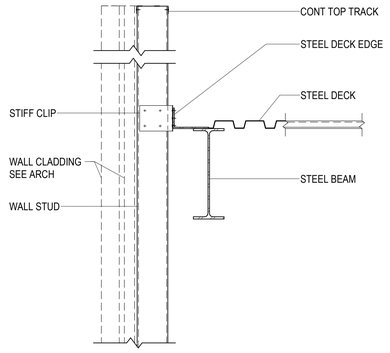

D1 / SW502 STEEL STUD WALL BYPASS AT ROOF - STIFF CONNECTION
NO SCALE

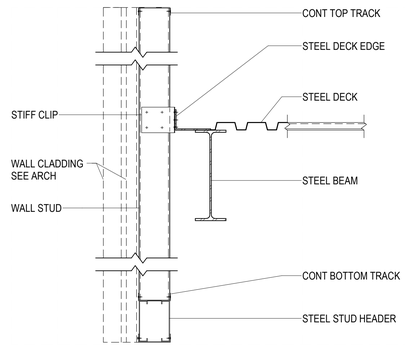

D2 / SW502 STEEL STUD WALL BYPASS AT ROOF - STIFF CONNECTION
NO SCALE

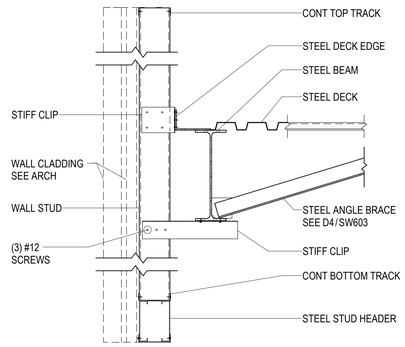

D3 / SW502 STEEL STUD WALL BYPASS AT ROOF - STIFF CONNECTION
NO SCALE

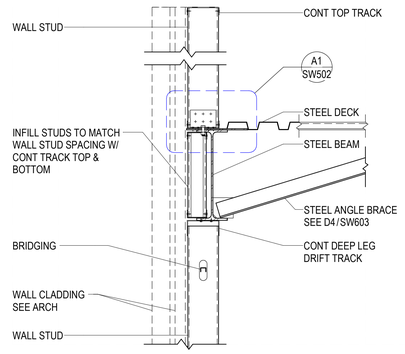

D4 / SW502 STEEL STUD WALL STACKED AT ROOF - CANTILEVERED PARAPET
NO SCALE

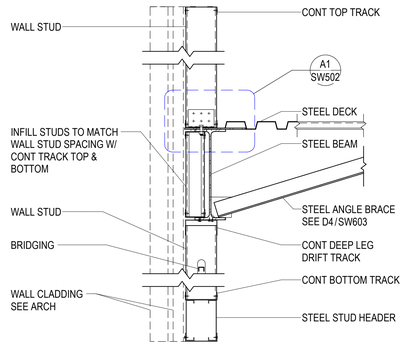

D5 / SW502 STEEL STUD WALL STACKED AT ROOF - CANTILEVERED PARAPET
NO SCALE

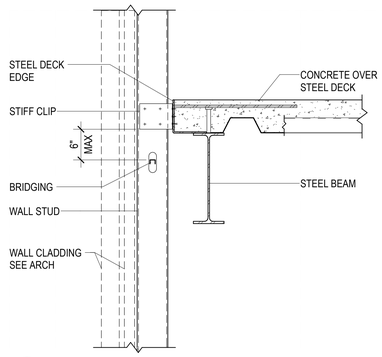

C1 / SW502 STEEL STUD WALL BYPASS AT FLOOR - STIFF CONNECTION
NO SCALE

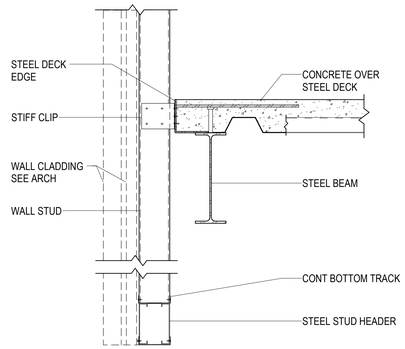

C2 / SW502 STEEL STUD WALL BYPASS AT FLOOR - STIFF CONNECTION
NO SCALE

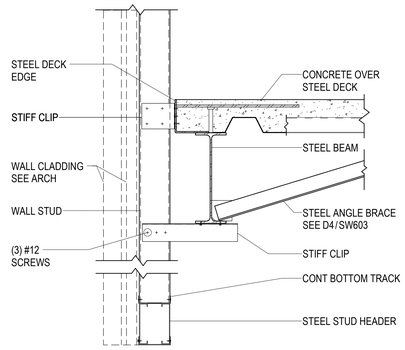

C3 / SW502 STEEL STUD WALL BYPASS AT FLOOR - STIFF CONNECTION
NO SCALE

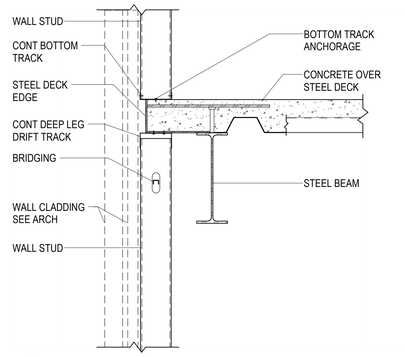

C4 / SW502 STEEL STUD WALL STACKED AT FLOOR - STIFF CONNECTION
NO SCALE

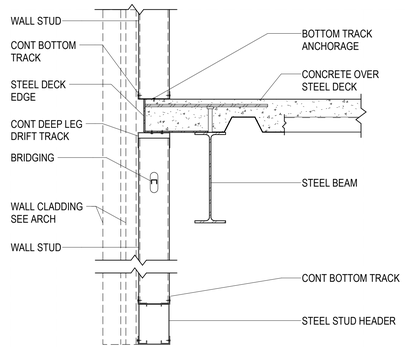

C5 / SW502 STEEL STUD WALL STACKED AT FLOOR - STIFF CONNECTION
NO SCALE

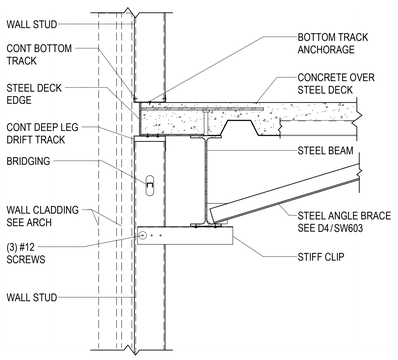

B1 / SW502 STEEL STUD WALL STACKED AT FLOOR - STIFF CONNECTION
NO SCALE

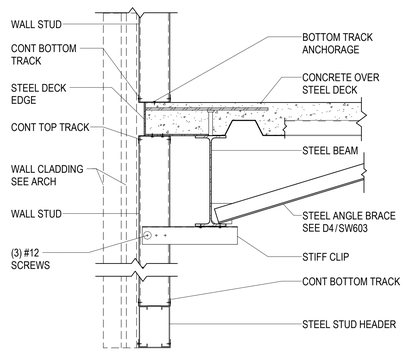

B2 / SW502 STEEL STUD WALL STACKED AT FLOOR - STIFF CONNECTION
NO SCALE

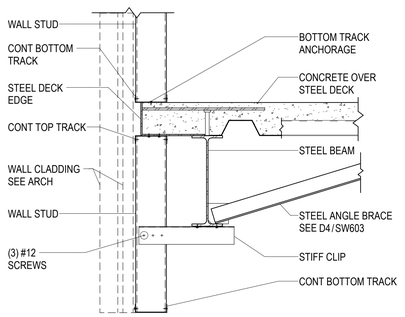

B3 / SW502 STEEL STUD WALL STACKED AT FLOOR - STIFF CONNECTION
NO SCALE

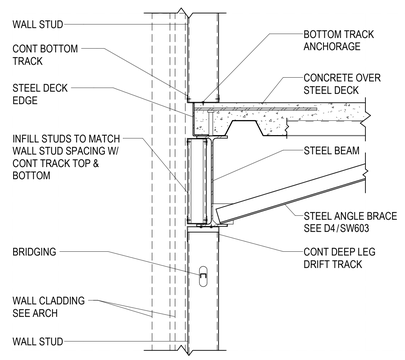

B4 / SW502 STEEL STUD WALL STACKED AT FLOOR - STIFF CONNECTION
NO SCALE

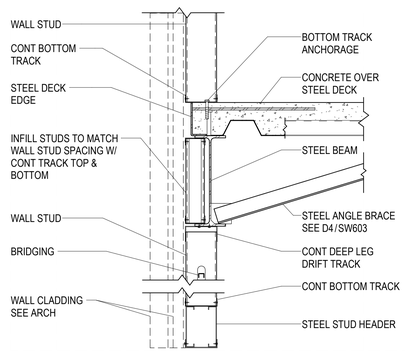

B5 / SW502 STEEL STUD WALL STACKED AT FLOOR - STIFF CONNECTION
NO SCALE

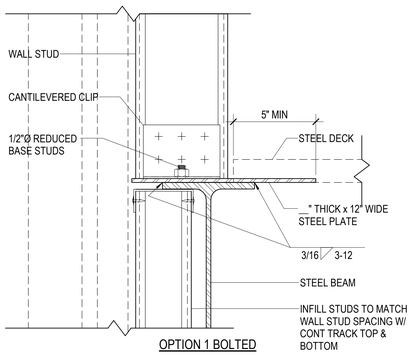

OPTION 1 BOLTED

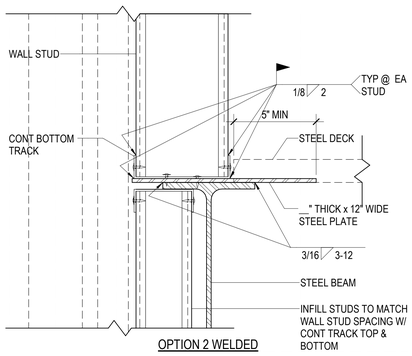

OPTION 2 WELDED

A1 / SW502 TYPICAL CANTILEVERED STUD CONNECTION AT ROOF
NO SCALE

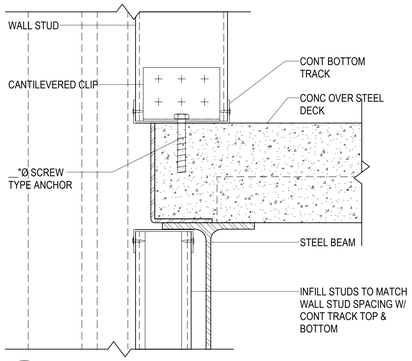

A3 / SW502 TYPICAL CANTILEVERED STUD CONNECTION AT FLOOR
NO SCALE

HKS

ARCHITECT
HKS ARCHITECTS, INC.
90 SOUTH 400 WEST, #110
SALT LAKE CITY, UTAH 84101

CIVIL ENGINEER
GREAT BASIN ENGINEERING, INC
5746 SOUTH 1475 EAST
OGDEN, UTAH 84403

LANDSCAPE ARCHITECT
MGB+A STUDIO
145 WEST 200 SOUTH
SALT LAKE CITY, UTAH 84101

STRUCTURAL ENGINEER
REAVELEY ENGINEERS
250 EAST 200 SOUTH, SUITE 1000
SALT LAKE CITY, UTAH 84111

M/P/FP ENGINEER
RESOLUT GROUP
181 EAST 5600 SOUTH, SUITE 200
MURRAY, UTAH 84107

E/T ENGINEER
LYNK ENGINEERS
324 SOUTH STATE STREET, SUITE 400
SALT LAKE CITY, UTAH 84111

Intermountain Health

UTAH VALLEY SPORTS PERFORMANCE CENTER

PROJECT ADDRESS: WEST 880 NORTH 200 WEST PROVO, UTAH 84604

SEAL & SIGNATURE

KEY PLAN

REVISION

NO.	DESCRIPTION	DATE

HKS PROJECT NUMBER
27487.000

DATE
08/26/2026

ISSUE
DESIGN DEVELOPMENT

SHEET TITLE
EXTERIOR STEEL STUD DETAILS (STIFF CONNECTIONS)

SHEET NO.
SW502

© HKS, INC.

TITLE BLOCK VERSION: 20210930
MODEL: Autodesk Docs://27487.000_IH_UV Sports Performance Center_2025/S_IH-UV_Sports Performance Center_2025.rvt
PRINT DATE: 8/26/2026 5:20:28 PM TEMPLATE VERSION:

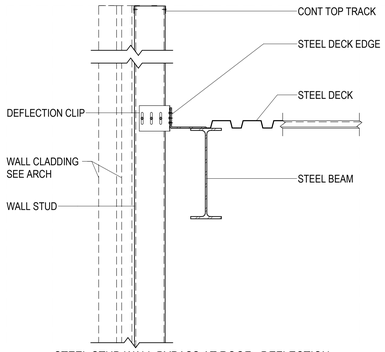

D1 / SW503 STEEL STUD WALL BYPASS AT ROOF - DEFLECTION CONNECTION
NO SCALE

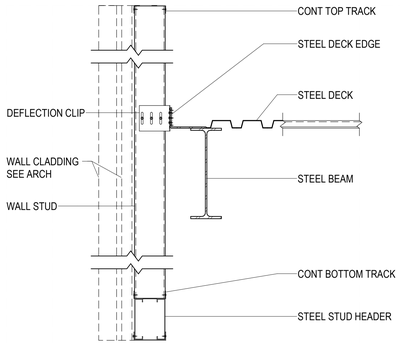

D2 / SW503 STEEL STUD WALL BYPASS AT ROOF - DEFLECTION CONNECTION
NO SCALE

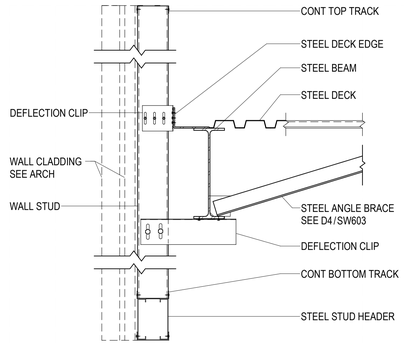

D3 / SW503 STEEL STUD WALL BYPASS AT ROOF - DEFLECTION CONNECTION
NO SCALE

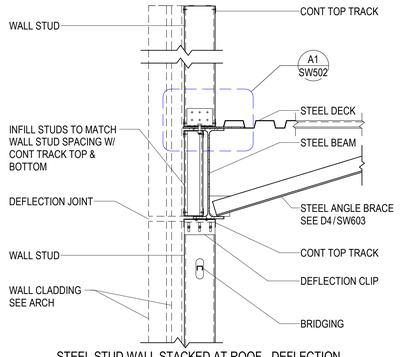

D4 / SW503 STEEL STUD WALL STACKED AT ROOF - DEFLECTION CONNECTION W/CANTILEVERED PARAPET
NO SCALE

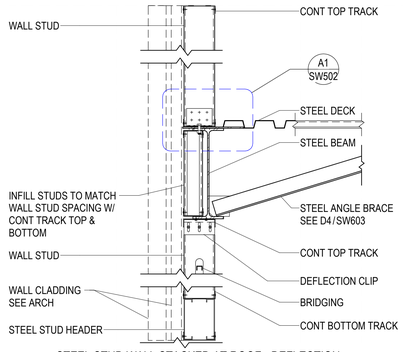

D5 / SW503 STEEL STUD WALL STACKED AT ROOF - DEFLECTION CONNECTION W/CANTILEVERED PARAPET
NO SCALE

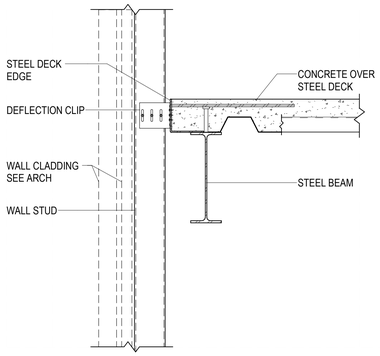

C1 / SW503 STEEL STUD WALL BYPASS AT FLOOR - DEFLECTION CONNECTION
NO SCALE

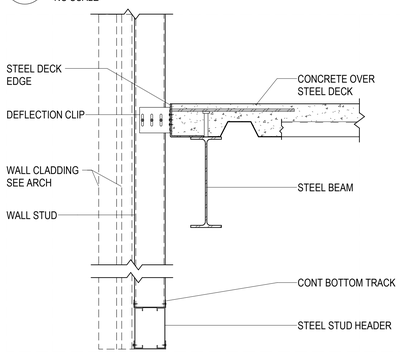

C2 / SW503 STEEL STUD WALL BYPASS AT FLOOR - DEFLECTION CONNECTION
NO SCALE

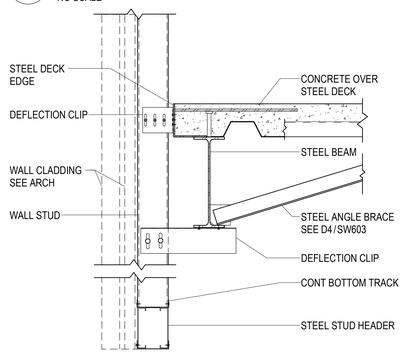

C3 / SW503 STEEL STUD WALL BYPASS AT FLOOR - DEFLECTION CONNECTION
NO SCALE

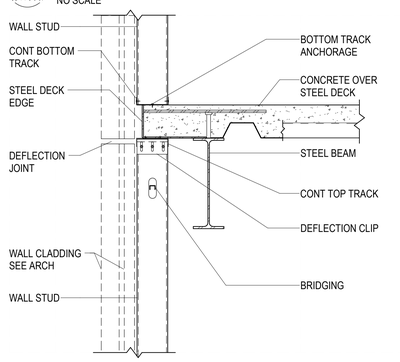

C4 / SW503 STEEL STUD WALL STACKED AT FLOOR - DEFLECTION CONNECTION
NO SCALE

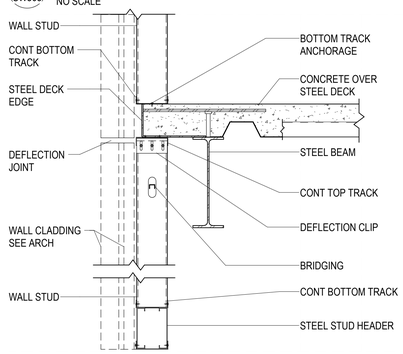

B4 / SW503 STEEL STUD WALL STACKED AT FLOOR - DEFLECTION CONNECTION
NO SCALE

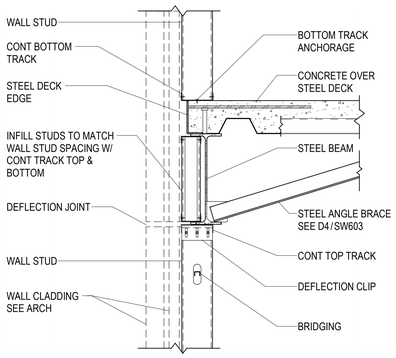

B1 / SW503 STEEL STUD WALL STACKED AT FLOOR - DEFLECTION CONNECTION
NO SCALE

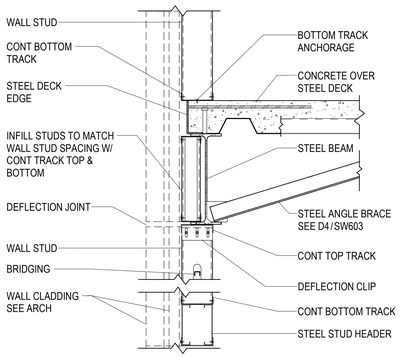

B2 / SW503 STEEL STUD WALL STACKED AT FLOOR - DEFLECTION CONNECTION
NO SCALE

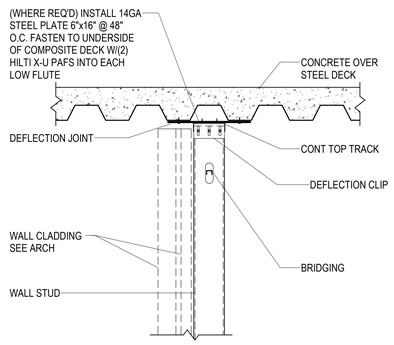

B3 / SW503 STUD WALL AT FLOOR - DEFLECTION CONNECTION
NO SCALE

HKS

ARCHITECT
HKS ARCHITECTS, INC.
90 SOUTH 400 WEST, #110
SALT LAKE CITY, UTAH 84101

CIVIL ENGINEER
GREAT BASIN ENGINEERING, INC
5746 SOUTH 1475 EAST
OGDEN, UTAH 84403

LANDSCAPE ARCHITECT
MGB+A STUDIO
145 WEST 200 SOUTH
SALT LAKE CITY, UTAH 84101

STRUCTURAL ENGINEER
REAVELEY ENGINEERS
250 EAST 200 SOUTH, SUITE 1000
SALT LAKE CITY, UTAH 84111

M/P/FP ENGINEER
RESOLUT GROUP
181 EAST 5600 SOUTH, SUITE 200
MURRAY, UTAH 84107

E/T ENGINEER
LYNK ENGINEERS
324 SOUTH STATE STREET, SUITE 400
SALT LAKE CITY, UTAH 84111

Intermountain Health

UTAH VALLEY SPORTS PERFORMANCE CENTER

PROJECT ADDRESS: WEST 880 NORTH 200 WEST PROVO, UTAH 84604

SEAL & SIGNATURE

KEY PLAN

REVISION

NO.	DESCRIPTION	DATE

HKS PROJECT NUMBER
27487.000

DATE
08/26/2026

ISSUE
DESIGN DEVELOPMENT

SHEET TITLE
EXTERIOR STEEL STUD DETAILS (DEFLECTION CONNECTIONS)

SHEET NO.
SW503

© HKS, INC.

TITLE BLOCK VERSION: 20210930
MODEL: Autodesk Docs://27487.000_IH_UV Sports Performance Center_2025/S_IH-UV_Sports Performance Center_2025.rvt
PRINT DATE: 8/26/2026 5:20:27 PM TEMPLATE VERSION:

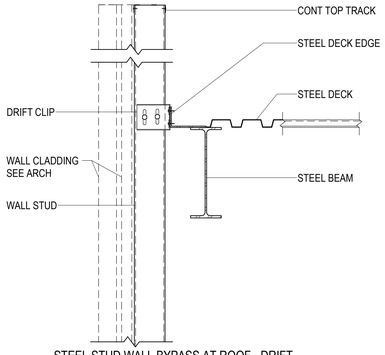

D1 / SW504 STEEL STUD WALL BYPASS AT ROOF - DRIFT CONNECTION
NO SCALE

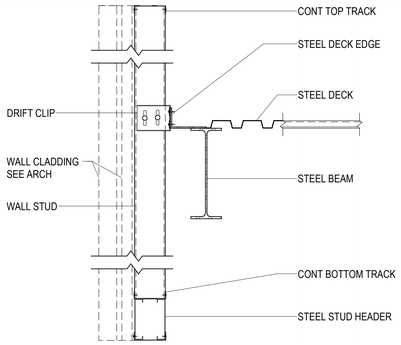

D2 / SW504 STEEL STUD WALL BYPASS AT ROOF - DRIFT CONNECTION
NO SCALE

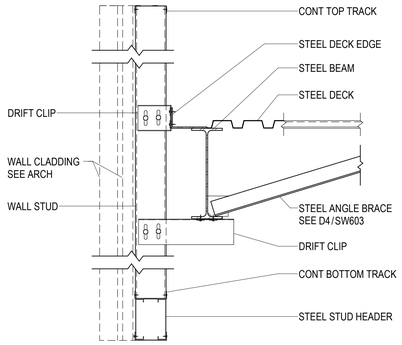

D3 / SW504 STEEL STUD WALL BYPASS AT ROOF - DRIFT CONNECTION
NO SCALE

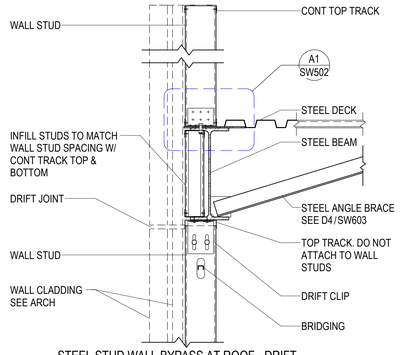

D4 / SW504 STEEL STUD WALL BYPASS AT ROOF - DRIFT CONNECTION WITH CANTILEVERED PARAPET
NO SCALE

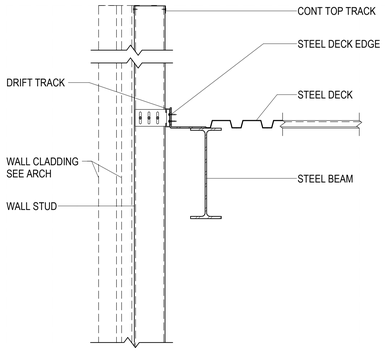

C1 / SW504 STEEL STUD WALL BYPASS AT ROOF - DRIFT TRACK CONNECTION
NO SCALE

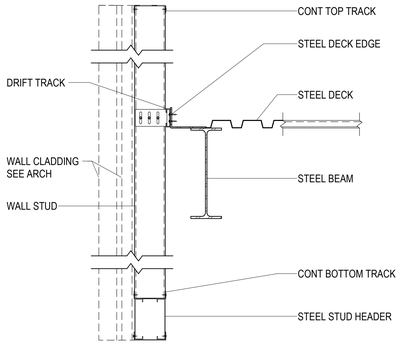

C2 / SW504 STEEL STUD WALL BYPASS AT ROOF - DRIFT TRACK CONNECTION
NO SCALE

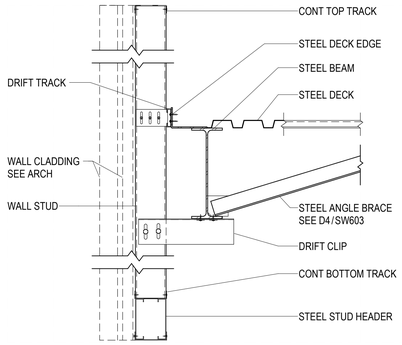

C3 / SW504 STEEL STUD WALL BYPASS AT ROOF - DRIFT TRACK CONNECTION
NO SCALE

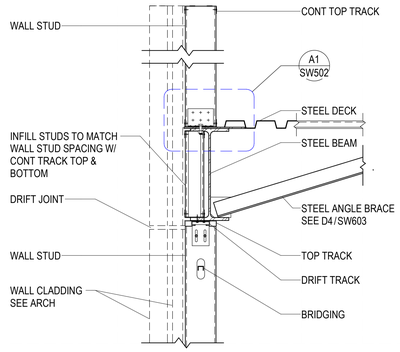

C4 / SW504 STEEL STUD WALL BYPASS AT ROOF - DRIFT TRACK CONNECTION WITH CANTILEVERED PARAPET
NO SCALE

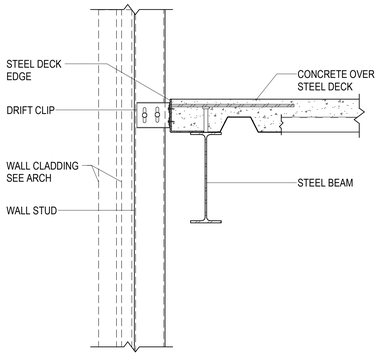

B1 / SW504 STEEL STUD WALL BYPASS AT FLOOR - DRIFT CONNECTION
NO SCALE

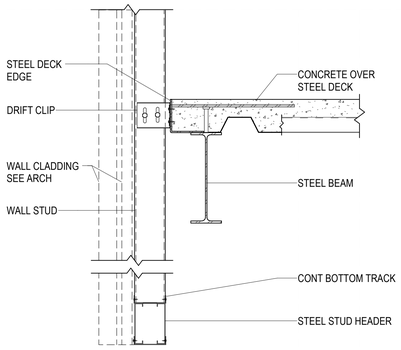

B2 / SW504 STEEL STUD WALL BYPASS AT FLOOR - DRIFT CONNECTION
NO SCALE

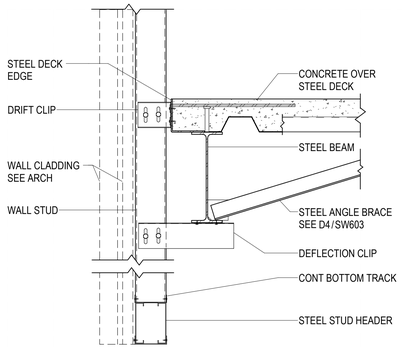

B3 / SW504 STEEL STUD WALL BYPASS AT FLOOR - DRIFT CONNECTION
NO SCALE

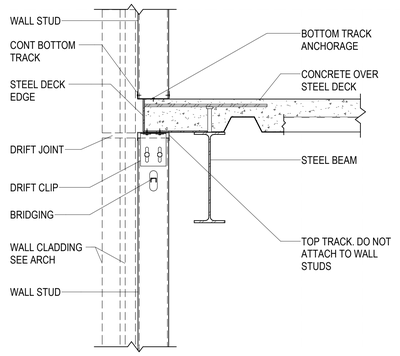

B4 / SW504 STEEL STUD WALL STACKED AT FLOOR - DRIFT CONNECTION
NO SCALE

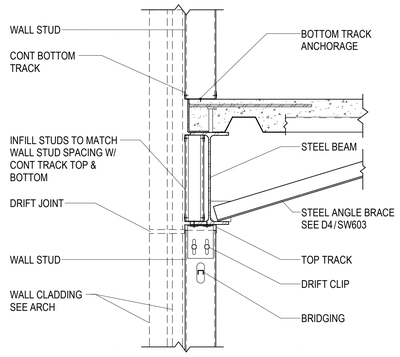

B5 / SW504 STEEL STUD WALL STACKED AT FLOOR - DRIFT CONNECTION
NO SCALE

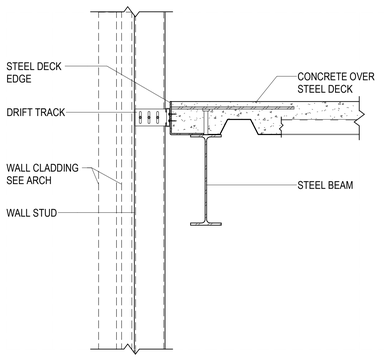

A1 / SW504 STEEL STUD WALL BYPASS AT FLOOR - DRIFT TRACK CONNECTION
NO SCALE

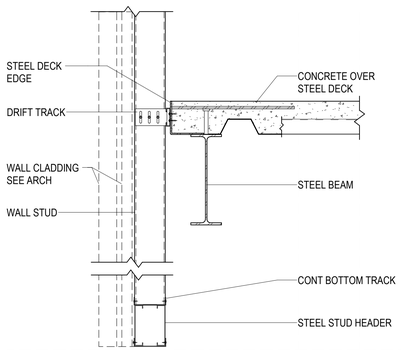

A2 / SW504 STEEL STUD WALL BYPASS AT FLOOR - DRIFT TRACK CONNECTION
NO SCALE

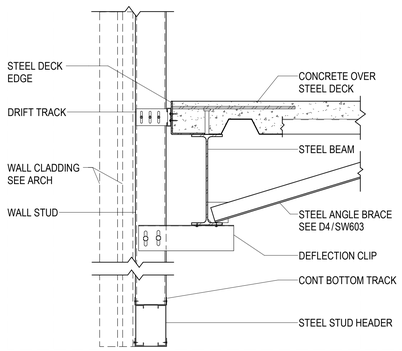

A3 / SW504 STEEL STUD WALL BYPASS AT FLOOR - DRIFT TRACK CONNECTION
NO SCALE

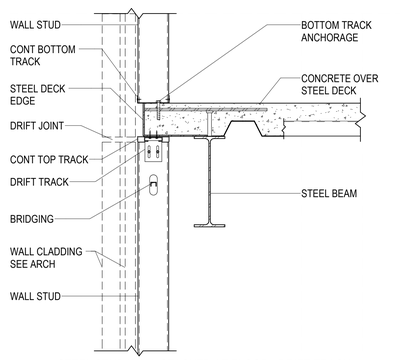

A4 / SW504 STEEL STUD WALL STACKED AT FLOOR - DRIFT TRACK CONNECTION
NO SCALE

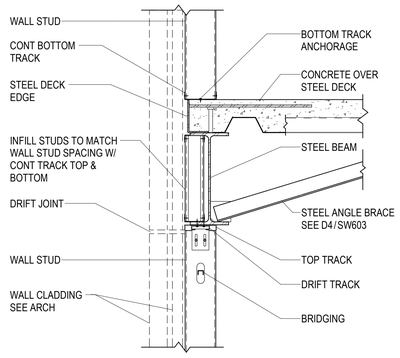

A5 / SW504 STEEL STUD WALL STACKED AT FLOOR - DRIFT TRACK CONNECTION
NO SCALE

© HKS, INC.

HKS

ARCHITECT
HKS ARCHITECTS, INC.
90 SOUTH 400 WEST, #110
SALT LAKE CITY, UTAH 84101

CIVIL ENGINEER
GREAT BASIN ENGINEERING, INC
5746 SOUTH 1475 EAST
OGDEN, UTAH 84403

LANDSCAPE ARCHITECT
MGB+A STUDIO
145 WEST 200 SOUTH
SALT LAKE CITY, UTAH 84101

STRUCTURAL ENGINEER
REAVELEY ENGINEERS
250 EAST 200 SOUTH, SUITE 1000
SALT LAKE CITY, UTAH 84111

M/P/FP ENGINEER
RESOLUT GROUP
181 EAST 5600 SOUTH, SUITE 200
MURRAY, UTAH 84107

E/T ENGINEER
LYNK ENGINEERS
324 SOUTH STATE STREET, SUITE 400
SALT LAKE CITY, UTAH 84111

Intermountain Health

UTAH VALLEY SPORTS PERFORMANCE CENTER

PROJECT ADDRESS: WEST 880 NORTH 200 WEST PROVO, UTAH 84604

SEAL & SIGNATURE

KEY PLAN

REVISION

NO.	DESCRIPTION	DATE

HKS PROJECT NUMBER
27487.000

DATE
08/26/2026

ISSUE
DESIGN DEVELOPMENT

SHEET TITLE
EXTERIOR STEEL STUD DETAILS (DRIFT CONNECTIONS)

SHEET NO.
SW504

TITLE BLOCK VERSION: 20210930
MODEL: Autodesk Docs://27487.000_IH - UV Sports Performance Center_2025/S_IH-UV_Sports Performance Center_2025.rvt
PRINT DATE: 8/26/2026 5:20:27 PM TEMPLATE VERSION:

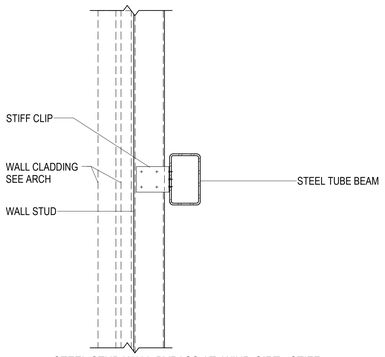

D1 / SW505 STEEL STUD WALL BYPASS AT WIND GIRT - STIFF CONNECTION
NO SCALE

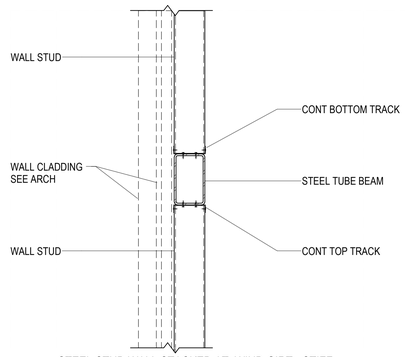

D2 / SW505 STEEL STUD WALL STACKED AT WIND GIRT - STIFF CONNECTION
NO SCALE

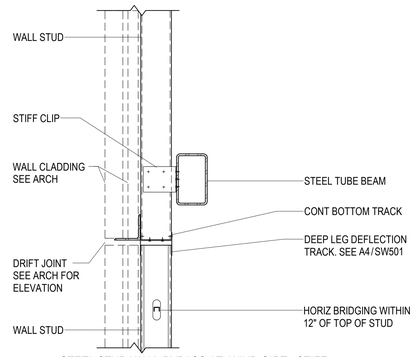

D3 / SW505 STEEL STUD WALL BYPASS AT WIND GIRT - STIFF CONNECTION
NO SCALE

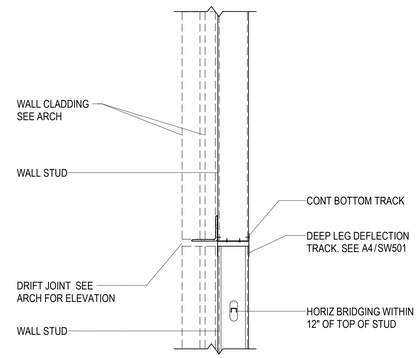

D4 / SW505 TYPICAL DRIFT JOINT AT STEEL STUD WALL
NO SCALE

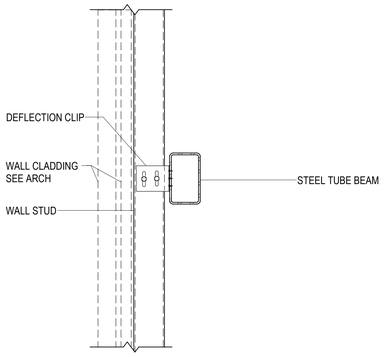

C1 / SW505 STEEL STUD WALL BYPASS AT WIND GIRT - DEFLECTION CONNECTION
NO SCALE

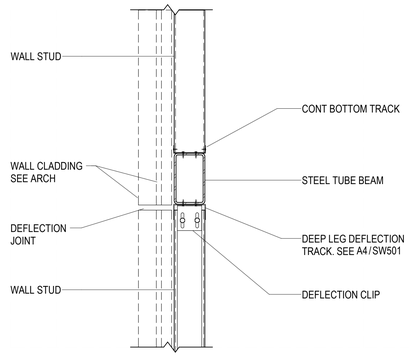

C2 / SW505 STEEL STUD WALL STACKED AT WIND GIRT - DEFLECTION CONNECTION
NO SCALE

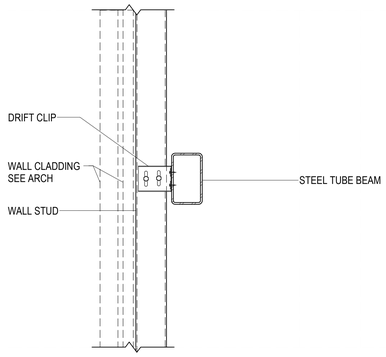

B1 / SW505 STEEL STUD WALL BYPASS AT WIND GIRT - DRIFT CONNECTION
NO SCALE

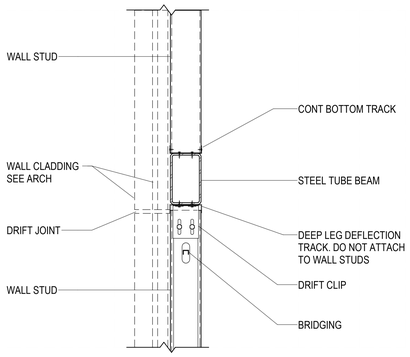

B2 / SW505 STEEL STUD WALL STACKED AT WIND GIRT - DRIFT TRACK CONNECTION
NO SCALE

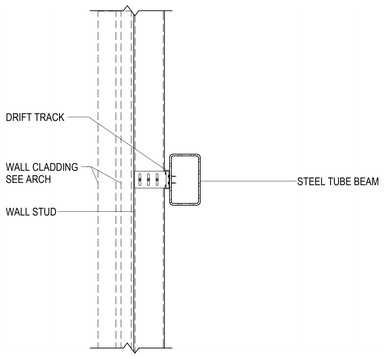

A1 / SW505 STEEL STUD WALL BYPASS AT WIND GIRT - DRIFT TRACK CONNECTION
NO SCALE

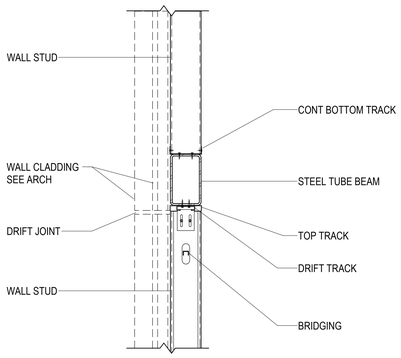

A2 / SW505 STEEL STUD WALL STACKED AT WIND GIRT - DRIFT TRACK CONNECTION
NO SCALE

© HKS, INC.

HKS

ARCHITECT
HKS ARCHITECTS, INC.
90 SOUTH 400 WEST, #110
SALT LAKE CITY, UTAH 84101

CIVIL ENGINEER
GREAT BASIN ENGINEERING, INC
5746 SOUTH 1475 EAST
OGDEN, UTAH 84403

LANDSCAPE ARCHITECT
MGB+A STUDIO
145 WEST 200 SOUTH
SALT LAKE CITY, UTAH 84101

STRUCTURAL ENGINEER
REAVELEY ENGINEERS
250 EAST 200 SOUTH, SUITE 1000
SALT LAKE CITY, UTAH 84111

M/P/FP ENGINEER
RESOLUT GROUP
181 EAST 5600 SOUTH, SUITE 200
MURRAY, UTAH 84107

E/T ENGINEER
LYNK ENGINEERS
324 SOUTH STATE STREET, SUITE 400
SALT LAKE CITY, UTAH 84111

Intermountain Health

UTAH VALLEY SPORTS PERFORMANCE CENTER

PROJECT ADDRESS: WEST 880 NORTH 200 WEST PROVO, UTAH 84604

SEAL & SIGNATURE

KEY PLAN

REVISION

NO.	DESCRIPTION	DATE

HKS PROJECT NUMBER
27487.000

DATE
08/26/2026

ISSUE
DESIGN DEVELOPMENT

SHEET TITLE
EXTERIOR STEEL STUD DETAILS (WIND GIRT)

SHEET NO.
SW505

TITLE BLOCK VERSION: 20210930
MODEL: Autodesk Docs://27487.000_IH_UV Sports Performance Center_2025/S IH-UV_Sports Performance Center_2025.rvt
PRINT DATE: 8/26/2026 5:20:28 PM TEMPLATE VERSION: