GENERAL STRUCTURAL NOTES

APPLY UNLESS NOTED OTHERWISE

BUILDING CODE:

2021 EDITION OF THE INTERNATIONAL BUILDING CODE WITH STATE OF UTAH AMENDMENTS.

LOADS:

ROOF LIVE LOAD = 20 PSF (REDUCIBLE).
TOTAL ROOF DEAD LOAD = 25 PSF. (INCLUDES 5 PSF FOR SOLAR)
SUPERIMPOSED DEAD LOAD ON ROOF JOISTS = 22 PSF (19 PSF TOP CHORD, 3 PSF BOTTOM CHORD).
GROUND SNOW LOAD (Pg) = 28PSF
FLAT ROOF (UNIFORM) SNOW LOAD (Pf) = 20PSF (NON-REDUCIBLE)
SEE SHEET S211-S212 FOR SNOW DRIFTS.
BALANCED SNOW LOAD (Ps) = 20PSF
Ct = 1.0, Ce = 1.0

WIND:

105 MPH BASIC WIND SPEED, EXPOSURE C.
RISK CATEGORY = II.
INTERNAL PRESSURE COEFFICIENT (GCpi) = ±0.18.
ANALYSIS PROCEDURE: DIRECTIONAL PROCEDURE – PART 1.
SEE SHEET S005 FOR COMPONENTS AND CLADDING DIAGRAMS.

SEISMIC:

RISK CATEGORY = II.
Ie = 1.0.
SEISMIC DESIGN CATEGORY = D, Ω = 2.5, ρ = 1.3.
SOIL SITE CLASS D.
S_s = 0.865, S_1 = 0.675
S_{DS}= 0.665, S_{D1} = 0.765
R = 4.0, 8.0
BASIC SEISMIC-FORCE-RESISTING SYSTEM = INTERMEDIATE PRECAST SHEAR WALLS AND SPECIAL STEEL MOMENT FRAME
ANALYSIS PROCEDURE = EQUIVALENT LATERAL FORCE PROCEDURE.
Cs = 0.167 & 0.083 (ULTIMATE)
V SEISMIC = 1330K (ULTIMATE)

FOUNDATIONS:

SOIL REPORT BY GSH GEOTECHNICAL, INC.; PROJECT NO. 3994-001-24; DATED OCTOBER 16, 2024 AND ADDENDUM NO. 3994-01B-25. SPREAD FOOTINGS SHALL BEAR UPON ENGINEERED FILL IN ACCORDANCE WITH THE ABOVE REPORT. BOTTOM OF FOOTING TO BE 2'-6" (1'-3" AT INTERIOR) MINIMUM BELOW FINISHED GRADE. THESE FOOTING DEPTHS ARE MINIMUMS AND THE CONTRACTOR SHALL COORDINATE WITH SOILS REPORT AND OTHER TRADES TO ENSURE THESE MINIMUMS ARE SUFFICIENT FOR THE WORK. COMPACTED FILL SHALL EXTEND A MINIMUM OF 5'-0" BEYOND EACH FOOTING EDGE OR PER SOILS REPORT RECOMMENDATION OR WHICHEVER IS GREATER. FINISHED GRADE IS DEFINED AS TOP OF SLAB FOR INTERIOR FOOTINGS AND LOWEST ADJACENT GRADE WITHIN 5 FEET FOR PERIMETER FOOTINGS. DESIGN SOIL BEARING VALUE = 2500 PSF. FOUNDATION EXCAVATIONS SHALL BE INSPECTED BY SOILS ENGINEER PRIOR TO PLACEMENT OF CONCRETE.

CONCRETE:

MINIMUM 28 DAY STRENGTH 3,000 PSI EXCEPT AS FOLLOWS: (TYPE II, U.N.O.)

CONCRETE TILT WALLS(F1,S0,W0,C0)----------------------------------4,000 PSI (U.N.O.)
SLABS ON GRADE (F0,S0,W0,C0)--------------------------------------4,000 PSI*
INTERIOR FOUNDATIONS(F0,S0,W0,C0) ---------------------------------3,000 PSI (U.N.O.)
LATERAL BRACE FRAME FOUNDATIONS AND GRADE BEAM(F0,S0,W1,C0)----------5,000 PSI
EXTERIOR FOUNDATIONS(F2,S0,WI,C0)---------------------------------4,500 PSI W/C ≤0.45

(FX,SX,WX,CX) REFERS TO CONCRETE EXPOSURES. REFER TO TABLE 19.3.2.1 OF ACI318-19 FOR ADDITIONAL INFORMATION.

MECHANICALLY VIBRATE ALL CONCRETE WHEN PLACED, EXCEPT THAT SLABS ON GRADE NEED BE VIBRATED ONLY AROUND UNDER-FLOOR DUCTS, ETC. MAXIMUM SLUMP 4 1/2" FOR CONCRETE WITHOUT PLASTICIZER. IF PLASTICIZER IS USED, A HIGHER FINAL SLUMP MAY BE ALLOWED UPON STRUCTURAL ENGINEER'S APPROVAL. CAST CLOSURE POUR AROUND COLUMNS AFTER COLUMN DEAD LOAD IS APPLIED. UNLESS APPROVED OTHERWISE IN WRITING BY THE ARCHITECT, ALL CONCRETE SLABS ON GRADE SHALL BE BOUND BY CONTROL JOINTS (KEYED OR SAW CUT), SUCH THAT THE ENCLOSED AREA DOES NOT EXCEED 225 SQUARE FEET. KEYED CONTROL JOINTS NEED ONLY OCCUR AT EXPOSED EDGES DURING POURING, ALL OTHER JOINTS MAY BE SAW CUT. CONTRACTOR SHALL SUBMIT PROPOSED LOCATIONS FOR APPROVAL PRIOR TO CONSTRUCTION.

* AT SLABS ON GRADE PLACED OVER VAPOR BARRIER (USE IN OFFICE AREAS), PROVIDE CONCRETE MIX DESIGN TO REDUCE THE EFFECTS OF SLAB CURL AND VAPOR/MOISTURE TRANSMISSION. THE USE OF FLY ASH AND SHRINKAGE REDUCING ADMIXTURES IS ENCOURAGED. PLACE SLAB REINFORCING (MIN. #3 AT 18" O.C. EACH WAY) WITHIN TOP 1/3 OF SLAB DEPTH. MAXIMUM WATER-CEMENT RATIO SHALL BE 0.47. VAPOR BARRIER SHALL BE PLACED DIRECTLY BENEATH THE SLAB ON TOP OF THE A.B.C. SLAB CURING SHALL BE PER THE ARCHITECTURAL SPECS. AND ACI MANUAL OF CONCRETE PRACTICE. FILL/SEAL CONTROL JOINTS PER THE ARCHITECTURAL SPECIFICATIONS. CEMENTITIOUS MATERIALS AND SHALL HAVE A REPLACEMENT FACTOR OF 1.2 RELATIVE TO CEMENT REPLACED.

CONTRACTOR SHALL REVIEW ARCHITECTURAL DRAWINGS AND SPECIFICATIONS FOR SPECIAL SLAB TREATMENTS AND VAPOR BARRIERS REQUIRED FOR FINISH FLOORING.

CONCRETE SLAB ON GRADE SHALL BE 7" THICKNESS WITH #3 AT 16" O.C. EACH WAY UNLESS NOTED OTHERWISE. INSTALL OVER 4" MINIMUM A.B.C. FILL. REFER TO SOILS REPORT FOR ADDITIONAL INFORMATION.

MASONRY:

MECHANICALLY VIBRATE GROUT IN VERTICAL SPACES IMMEDIATELY AFTER POURING AND AGAIN ABOUT 5 MINUTES LATER. PROVIDE CLEANOUTS IF GROUT LIFT EXCEEDS 4'-0" IN BLOCK WALLS. MAXIMUM GROUT LIFT SHALL BE 8'-0". UNLESS NOTED OTHERWISE ON THE PLANS, PLACE CONTROL JOINTS IN MASONRY WALLS SUCH THAT NO STRAIGHT RUN OF WALL EXCEEDS 24'-0". CONTROL JOINTS SHALL NOT OCCUR WITHIN 8'-0" OF WALL CORNERS, INTERSECTIONS, ENDS, WITHIN 24" OF CONCENTRATED POINTS OF BEARING OR JAMBS, OR OVER OPENINGS UNLESS SPECIFICALLY SHOWN ON THE STRUCTURAL DRAWINGS. ALL MASONRY BELOW FINISHED FLOOR OR GRADE SHALL BE GROUTED SOLID. LAP SPLICES SHALL BE AS FOLLOWS:

BAR SIZE	#3	#4	#5	#6	#7	#8	#9
BAR LAPS (inches)	27	36	45	54	63	72	81

HOLLOW CONCRETE MASONRY UNITS SHALL CONFORM TO ASTM C90, NORMAL WEIGHT, RUNNING BOND, MORTAR TYPE S (1800 PSI), COMPRESSIVE STRENGTHS AS FOLLOWS:

F'm(PSI)	UNIT STRENGTH, NET (PSI)	GROUT (PSI)	LOCATION
2000	2000	2000	TYPICAL U.N.O.

VERTICAL REINFORCING:

1- #5 IN CENTER OF GROUT AT CENTER OF WALL, CONTINUOUS FULL HEIGHT OF WALL AT ALL CORNERS, INTERSECTIONS, WALL ENDS, BEAM BEARINGS, JAMBS, EACH SIDE OF CONTROL JOINTS AND AT INTERVALS NOT TO EXCEED 48" O.C. UNLESS NOTED OTHERWISE. TIE AT 8'-0" VERTICALLY, WITH SINGLE WIRE LOOP TIE BY A.A. WIRE PRODUCTS COMPANY. LAP SPLICES SHALL BE AS PER SCHEDULE UNDER "MASONRY" SECTION. DOWEL ALL VERTICAL REINFORCING TO FOUNDATION WITH DOWELS TO MATCH VERTICAL REINFORCING.

HORIZONTAL REINFORCING:

2- #5 IN MINIMUM 8" DEEP GROUTED CONTINUOUS BOND BEAM AT (ELEVATED FLOORS AND) ROOFLINE. 1- #5 IN MINIMUM 8" DEEP GROUTED CONTINUOUS BOND BEAM AT TOP OF PARAPET OR TOP OF A FREESTANDING WALL. USE 1- #4 HORIZONTAL BOND BEAM AT 48" O.C. VERTICALLY SPACED FOR ALL WALLS WITHOUT RUNNING BOND (STACKED BOND). PLACE THESE BARS CONTINUOUS THRU CONTROL JOINTS PER TYPICAL DETAIL. PROVIDE BENT BARS PER TYPICAL DETAILS, TO MATCH HORIZONTAL BOND BEAM REINFORCING, AT CORNERS AND WALL INTERSECTION TO MAINTAIN BOND BEAM CONTINUITY. LAP SPLICES SHALL BE AS PER SCHEDULE UNDER "MASONRY" SECTION. DO NOT SPLICE WITHIN 8'-0" OF CONTROL JOINTS. USE STANDARD WEIGHT (NO. 9 GAGE WIRE) DUR-O-WAL OR DUR-O-WIRE (OR EQUIVALENT) LADDER TYPE JOINT REINFORCEMENT AT 16" O.C. IN MASONRY WALLS.

REINFORCING:

ASTM A615 (Fy = 60 KSI) DEFORMED BARS FOR ALL BARS. ALL GRADE 60 REINFORCING TO BE WELDED SHALL BE ASTM A706. WELDED WIRE FABRIC PER ASTM A185, WIRE PER ASTM A82. NO TACK WELDING OF REINFORCING BARS ALLOWED WITHOUT PRIOR REVIEW OF PROCEDURE WITH THE STRUCTURAL ENGINEER. LATEST ACI CODE AND DETAILING MANUAL APPLY. CLEAR CONCRETE COVERAGES AS FOLLOWS:

CAST AGAINST AND PERMANENTLY EXPOSED TO EARTH ------------------ 3"
EXPOSED TO EARTH OR WEATHER
#6 OR LARGER --------------------------------------- 2"
#5 AND SMALLER ------------------------------------- 1 1/2"
ALL OTHER PER LATEST EDITION OF ACI 318.

LAP SPLICES IN CONCRETE:

LAP SPLICES, UNLESS NOTED OTHERWISE, SHALL BE CLASS "B" TENSION LAP SPLICES PER LATEST EDITION OF ACI 318. LAP SPLICES IN CONCRETE COLUMNS SHALL BE STANDARD COMPRESSION LAP SPLICES. STAGGER SPLICES A MINIMUM OF ONE LAP LENGTH. LAPS IN WELDED WIRE FABRIC SHALL BE MADE SO THAT THE OVERLAP, MEASURED BETWEEN OUTERMOST CROSS WIRES OF EACH FABRIC SHEET, IS NOT LESS THAN THE SPACING OF CROSS WIRES PLUS 2 INCHES. ALL WELDED WIRE FABRIC SHALL BE CHAIRED TO ENSURE PROPER CLEARANCES.

ALL SPLICE LOCATIONS SUBJECT TO APPROVAL BY THE STRUCTURAL ENGINEER. PROVIDE BENT CORNER BARS TO MATCH AND LAP WITH HORIZONTAL BARS AT ALL CORNERS AND INTERSECTIONS PER TYPICAL DETAILS. REINFORCING BAR SPACING GIVEN ARE MAXIMUM ON CENTERS. ALL BARS PER CRSI SPECIFICATIONS AND HANDBOOK. DOWEL ALL VERTICAL REINFORCING TO FOUNDATION WITH STANDARD 90-DEGREE HOOKS UNLESS NOTED OTHERWISE. SECURELY TIE ALL BARS IN LOCATION BEFORE PLACING CONCRETE. CONCRETE COLUMN DOWEL EMBEDMENT SHALL BE A STANDARD COMPRESSION DOWEL WITH EMBEDMENT LENGTH ACCORDING TO THE

LATEST EDITION OF THE ACI 318. (UNLESS NOTED OTHERWISE ON PLANS OR DETAILS).

ANCHOR BOLTS:

ALL ANCHOR BOLTS SHALL BE ASTM F1554 GRADE 36 (WELDABLE), U.N.O., WHEN SPECIFIED ON PLAN, ALL ASTM F1554 GRADE ANCHOR BOLTS SHALL BE 511 (WELDABLE) ANCHOR BOLTS. ONLY GRADE 36 ANCHOR BOLTS.

MAY BE BENT IN FIELD PER AISC REQUIREMENTS TO FIXED DAMAGED ANCHOR BOLTS; FIELD BENT IS LIMITED TO 45° OR LESS. ANCHOR BOLTS CAN HAVE HEADED OT HOOKED BOLTS SHAPES. USE HEADED ANCHOR BOLTS WHERE ANCHOR BOLT SHAPE IS NOT SPECIFIED. ANCHOR BOLTS SHALL BE INSPECTED PER SPECIAL INSPECTION TABLE REQUIREMENTS.

DRYPACK:

DRYPACK SHALL BE 5,000 PSI NON-SHRINK GROUT, FIVE STAR OR EQUIVALENT. INSTALL DRYPACK UNDER BEARING PLATES BEFORE FRAMING MEMBER IS INSTALLED. AT COLUMNS, INSTALL DRYPACK UNDER BASEPLATES AFTER COLUMN HAS BEEN PLUMBED BUT PRIOR TO FLOOR OR ROOF INSTALLATION.

STRUCTURAL STEEL:

STEEL SETIONS – MINIMUM GRADE AND STRENGTH

STEEL WIDE FLANGES	= ASTM A992 (50KSI)
STEEL CHANNELS	= ASTM A36 (36KSI)
STEEL ANGLES	= ASTM A36 (36KSI)
STEEL COLUMN BASE PLATES	= ASTM A572 (50KSI)
STEEL PLATES AT MOMENT FRAME AND BRACED FRAME CONNECTIONS	= ASTM A572 (50KSI)
STEEL PLATES (MISCELLLANEOUS)	= ASTM A36 (36KSI)
STEEL HSS (RECTANGLE)	= ASTM A500 (46KSI)
STEEL HSS (ROUND)	= ASTM A500 (42KSI)
STEEL PIPES	= ASTM A501 (36KSI) – OR – ASTM A53 (35KSI), TYPE E OR S

NOTE: ALL 36KSI STEEL MAY BE SUBSTITUTED WITH 50KSI STEEL UNLESS NOTED OTHERWISE.

ALL CONSTRUCTION PER LATEST AISC HANDBOOK. ALL REFERENCE TO HEADED STUDS SHALL BE HIGH STRENGTH HEADED STUDS. ATTACHMENT OF HEADED STUDS SHALL CONFORM TO ALL REQUIREMENTS OF THE LATEST EDITION OF THE "RECOMMENDED PRACTICES FOR STUD WELDING" AND THE "STRUCTURAL WELDING CODE" PUBLISHED BY AWS. ALL BOLTS, ANCHOR BOLTS, EXPANSION BOLTS, ETC. SHALL BE INSTALLED WITH STEEL WASHERS AT FACE OF WOOD OR AT SLOTTED HOLES IN STEEL SECTIONS. ALL HIGH STRENGTH BOLTING SHALL BE INSPECTED BY AN INDEPENDENT TESTING LABORATORY. ALL WELDING SHALL BE PERFORMED BY WELDERS HOLDING VALID CERTIFICATES AND HAVING CURRENT EXPERIENCE IN THE TYPE OF WELD SHOWN ON THE DRAWINGS OR NOTES. CERTIFICATES SHALL BE THOSE ISSUED BY AN ACCEPTED TESTING AGENCY. PER AISC, CHARPY V-NOTCH (CVN) IMPACT TEST RESULTS IN ACCORDANCE WITH ASTM A6/A6M ARE REQUIRED FOR HOT-ROLLED SHAPES WITH A FLANGE THICKNESS EXCEEDING 2" AND BUILT-UP MEMBERS CONSISTING OF PLATES WITH A THICKNESS EXCEEDING 2" THAT ARE SPLICED USING COMPLETE JOINT PENETRATION GROOVE WELDS. IN ADDITION, WHEN USED IN THE LATERAL FORCE RESISTING SYSTEM, HOT-ROLLED SHAPES WITH FLANGES 1 1/2" AND GREATER THICKNESS, AND PLATES 2" AND GREATER THICKNESS, SHALL ALSO MEET (CVN) TOUGHNESS REQUIREMENTS PER AISC 341. ALL WELDING DONE BY E70 SERIES LOW HYDROGEN RODS UNLESS NOTED OTHERWISE. FOR GRADE 60 REINFORCING BARS, USE E90 SERIES. AT MOMENT CONNECTIONS, REMOVE ALL WELD BACKING AND RUN-OFF TABS AND BACKGOUGE TO SOUND WELD METAL. BACKWELD WITH A MINIMUM 5/16" FILLET. ALL WELDING PER LATEST AMERICAN WELDING SOCIETY STANDARDS, (EXCEPT STEEL JOISTS AND JOIST GIRDERS SHALL COMPLY WITH SJI STANDARDS). THESE DRAWINGS DO NOT DISTINGUISH BETWEEN SHOP AND FIELD WELDS; THE CONTRACTOR MAY SHOP WELD OR FIELD WELD AT HIS DISCRETION. SHOP WELDS AND FIELD WELDS SHALL BE SHOWN ON THE SHOP DRAWINGS SUBMITTED FOR REVIEW. ALL FULL (COMPLETE) PENETRATION WELDS SHALL BE TESTED AND CERTIFIED BY AN INDEPENDENT TESTING LABORATORY. WHEN STRUCTURAL STEEL IS FURNISHED TO A SPECIFIED MINIMUM YIELD POINT GREATER THAN 36 KSI, THE ASTM OR OTHER SPECIFICATION DESIGNATION SHALL BE INCLUDED NEAR THE ERECTION MARK ON EACH SHIPPING ASSEMBLY OR IMPORTANT CONSTRUCTION COMPONENT, OVER ANY SHOP COAT OF PAINT, PRIOR TO SHIPMENT FROM THE FABRICATOR'S PLANT. STRUCTURAL STEEL COMPONENTS, AND FASTENERS AT ALL EXTERIOR CONDITIONS SHALL BE GALVANIZED OR PROTECTED AGAINST CORROSION USING APPROVED METHOD PUBLISHED BY AISC OR ANSI. WELDS ON GALVANIZED STEEL SHALL FOLLOW AWS D-19.0 SPECIFICATIONS.

STRUCTURAL BOLTS:

ALL STRUCTURAL BOLTS SHALL BE ASTM F3125 GRADE A325 TYPE 1 AND SHALL BE INSTALLED AS BEARING-TYPE CONNECTIONS WITH THREADS INCLUDED IN SHEAR PLANE (I.E. A TYPE "N" CONNECTION) UNLESS NOTED OTHERWISE. USE A325 TYPE 3 BOLTS AT ALL CONNECTIONS EXPOSED TO WEATHERING. USE SC (SLIP CRITICAL) AT ALL MOMENT FRAMES AND BRACED FRAMES. USE ASTM A354 BOLTS WHERE THE BOLT LENGTH REQUIRED FOR THE CONNECTION EXCEEDS THE MINIMUM LENGTH OF AN A325 BOLT. BOLTS MAY BE TIGHTENED USING ANY AISC APPROVED METHOD. ALL STRUCTURAL BOLTING SHALL BE INSPECTED BY AN INDEPENDENT TESTING LABORATORY TO ENSURE BOLT TENSION.

STEEL DECK:

DECK SHALL BE 1 1/2" DEEP, 36" WIDE, 20 GAGE GALVANIZED STEEL, WITH MINIMUM YIELD STRESS OF 50 KSI, WITH MINIMUM S = 0.237 IN3 AND I = 0.231 IN4 PER FOOT OF WIDTH. DECK SHALL BE ERECTED IN ACCORDANCE WITH MANUFACTURES RECOMMENDATIONS AS 2 SPAN MINIMUM AND SHALL BE ATTACHED FOR A MINIMUM DIAPHRAGM SHEAR CAPACITY OF 1914 PLF USING THE FOLLOWING MINIMUM ATTACHMENTS:

WELD DECK TO SUPPORTING MEMBERS PER SCHEDULE ON SHEET S006 AT ENDS, END LAPS AND AT INTERMEDIATE SUPPORTS, AND AT 12" O.C. AT PERIMETER BEAMS AND OPENING EDGES RUNNING PARALLEL TO THE DECK. SIDE SEAM ATTACHMENT SHALL BE VSC2 AT SPACING SPECIFIED ON SHEET S006.

DECK SHALL BE 1 1/2" DEEP, 36" WIDE, 18 GAGE GALVANIZED STEEL, WITH MINIMUM YIELD STRESS OF 50 KSI, WITH MINIMUM S = 0.331 IN3 AND I = 0.306 IN4 PER FOOT OF WIDTH. DECK SHALL BE ERECTED IN ACCORDANCE WITH MANUFACTURES RECOMMENDATIONS AS 2 SPAN MINIMUM AND SHALL BE ATTACHED FOR A MINIMUM DIAPHRAGM SHEAR CAPACITY OF 1914 PLF USING THE FOLLOWING MINIMUM ATTACHMENTS:

WELD DECK TO SUPPORTING MEMBERS PER SCHEDULE ON SHEET S006 AT ENDS, END LAPS AND AT INTERMEDIATE SUPPORTS, AND AT 12" O.C. AT PERIMETER BEAMS AND OPENING EDGES RUNNING PARALLEL TO THE DECK. SIDE SEAM ATTACHMENT SHALL BE VSC2 AT SPACING SPECIFIED ON SHEET S006.

STEEL JOISTS AND JOIST GIRDERS:

ALL JOISTS AND JOIST GIRDERS SHALL BE DESIGNED, FABRICATED, WELDED AND ERECTED IN ACCORDANCE WITH THE LATEST EDITION OF THE "STANDARD SPECIFICATIONS" OF THE STEEL JOIST INSTITUTE.

LOADS SHOWN ON PLANS FOR JOIST AND JOIST GIRDERS ARE SUPERIMPOSED LOADS AND DO NOT INCLUDE SELFWEIGHT.

STEEL JOISTS AND JOIST GIRDERS (CONTINUED):

JOIST SIZES INDICATED ON PLANS ARE MINIMUMS. JOIST AND GIRDER LOADS SHOWN ON PLANS ARE SUPERIMPOSED AND DO NOT INCLUDE SELF-WEIGHT. JOIST MANUFACTURER SHALL DESIGN AND SUBMIT CALCULATIONS BY A REGISTERED ENGINEER FOR ALL JOISTS, EXCEPT PARALLEL CHORD JOISTS WITH UNIFORM LOADS AND CONTINUOUSLY SUPPORTED COMPRESSION CHORDS PER SJI STANDARD LOAD TABLES. JOIST MANUFACTURER SHALL DESIGN AND SUBMIT CALCULATIONS BY A REGISTERED ENGINEER FOR ALL JOIST GIRDERS. CALCULATIONS SHALL INCLUDE DEFLECTION AND CAMBER REQUIREMENTS. LIVE LOAD DEFLECTIONS SHALL BE LIMITED TO SPAN/240,. TOTAL LOAD DEFLECTIONS SHALL BE LIMITED TO SPAN/180.
ALL JOISTS AND JOIST GIRDERS SHALL BE CAMBERED FOR 75% OF THE DESIGN DEAD LOAD. MANUFACTURER SHALL ADD ADDITIONAL WEB MEMBERS AS REQUIRED AND ADJUST CHORD AND WEB SIZES ACCORDINGLY, BUT SHALL NOT ALTER DEPTH OF JOISTS AND JOIST GIRDERS. DESIGN CALCULATIONS SHALL INCLUDE SUPERIMPOSED LOADS FOR FRAMING SUPPORTED EQUIPMENT. VERIFY SIZE, WEIGHT AND LOCATION OF EQUIPMENT WITH ARCHITECTURAL, MECHANICAL, PLUMBING AND ELECTRICAL DRAWINGS. SPRINKLER OR PLUMBING PIPING 4" DIA. OR GREATER MUST BE ADDED TO JOIST DESIGN LOADS (SEE FIRE PROTECTION AND PLUMBING DRAWINGS).

JOIST SUPPLIER SHALL DESIGN FOR LOADS FROM OTHER DISCIPLINES. LOADS SHOWN ON STRUCTURAL PLAN DO NOT INCLUDE ADDITIONAL CAPACITY TO SUPPORT MECHANICAL OR PLUMBING LOADS. JOIST SUPPLIER TO VERIFY ALL BRACE LOADS AND EXTENDED END LOADS NOT SPECIFICALLY SHOWN ON PLANS OR DETAILS (FOR BID PURPOSES ASSUME 1000 LB FORCE MINIMUM). ALL ROOF JOISTS AND JOIST GIRDERS SHALL BE DESIGNED TO ACCOMMODATE A FUTURE MECHANICAL LOAD OF 650 POUNDS PER JOIST AT ANY LOCATION IN ADDITION TO ANY MECHANICAL LOADS SHOWN ON DRAWINGS.

CONTRACTOR SHALL SUBMIT SHOP DRAWINGS WITH DESIGN CALCULATIONS SEALED BY A REGISTERED ENGINEER FOR REVIEW PRIOR TO MANUFACTURE. SHOP DRAWINGS AND CALCULATIONS SHALL INCLUDE DETAILS OF ANY OPTIONAL FIELD SPLICES, AND IF HIGH STRENGTH BOLTS OR FULL PENETRATION WELDS ARE UTILIZED. CONTRACTOR SHALL RETAIN AN INDEPENDENT TESTING LABORATORY TO CERTIFY COMPLIANCE WITH AISC AND AWS SPECIFICATIONS RESPECTIVELY.

ALL STEEL JOISTS/GIRDERS OR BEAMS SHALL BEAR AT A PANEL POINT. JOISTS OR BEAMS TO BE EQUALLY SPACED BETWEEN COLUMN LINES – TYPICAL U.N.O. PROVIDE BRIDGING AS REQUIRED, PER SJI SPECIFICATIONS. WHERE BOTTOM CHORD WELDING IS INDICATED, DO NOT WELD BOTTOM CHORD TO SUPPORT UNTIL FULL DEAD LOAD IS IN PLACE.

WHERE CROSS BRIDGING INTERFERES WITH MECHANICAL INSTALLATIONS, REMOVE THIS CROSS BRIDGING AFTER TOTAL DEAD LOAD IS APPLIED AND REPLACE WITH HORIZONTAL ANGLES 2" X 2" X 3/16" AT TOP AND BOTTOM CHORDS.

MANUFACTURER SHALL DESIGN JOIST AND JOIST GIRDERS IN ACCORDANCE WITH THE UL DESIGN REQUIREMENTS IN ORDER TO ACHIEVE THE FIRE RATING SPECIFIED IN ARCHITECTURAL DRAWINGS.

MANUFACTURER SHALL DESIGN JOIST SHOES WHERE BEARING LENGTH IS LESS THAN 4" AT LH SERIES JOIST AND LESS THAN 3" AT K SERIES JOIST.

JOIST MANUFACTURER SHALL DESIGN ALL JOISTS AND GIRDERS FOR A 2000 LB VERTICAL CONCENTRATED LOAD AT ANY BOTTOM PANEL JOINT ALONG THE LENGTH OF THE MEMBER. LOAD DOES NOT NEED TO ACT CONCURRENTLY WITH UNIFORM LOAD.

PRECAST WORK:

REINFORCING SHOWN IN DETAIL IS FOR IN-PLACE CONDITION. CONTRACTOR SHALL BE RESPONSIBLE FOR PICK UP POINT INSERTS AND LOCATIONS, SPECIAL PICK UP REINFORCING AND STRONG BACKS, AND ALL PICK UP AND PLACING OPERATIONS.

ELECTRICAL CONDUIT IN CONCRETE SLABS:

ELECTRICAL CONDUIT SHALL BE RIGID STEEL CONDUIT OR FLEXIBLE PLASTIC CONDUIT. ALUMINUM CONDUIT IS EMBEDDED IN ONE LAYER AT THE MID-DEPTH OF SLABS. MINIMUM CLEAR DISTANCE BETWEEN CONDUITS SHALL PROHIBITED. CONDUIT WITH A MAXIMUM OUTSIDE DIAMETER OF 1/6 TIMES THE SLAB THICKNESS MAY BE

BE 3 TIMES CONDUIT DIAMETER. CONDUIT SHALL BE FIRMLY CHAIRED AND TIED TO PREVENT DISPLACEMENT DURING POURING. PLACE #3 AT 12 INCHES ADDITIONAL REINFORCING ABOVE AND BELOW, PERPENDICULAR TO THE CONDUIT. THE ADDED REINFORCING SHALL EXTEND 1'-0" PAST THE CONDUIT ON BOTH SIDES. FOR CONDUIT PLACED IN SLABS ON METAL DECKING, CONDUIT SHALL RUN IN THE METAL DECK FLUTES PER THE TYPICAL CONDUIT IN SLAB ON METAL DECK DETAIL.

CONCRETE INSERTS:

THIN SLAB TYPE INSERTS SHALL BE GALVANIZED AND HAVE THE FOLLOWING MINIMUM WORKING LOADS(A 4:1 RATIO OF ULTIMATE TO WORKING VALUES IS ASSUMED):

BOLT DIAMETER	SHEAR	WORKING LOAD TENSION
1/2"	1,000 LBS.	650 LBS.
5/8"	1,250 LBS.	700 LBS.
3/4"	1,600 LBS.	850 LBS.

COIL LOOP INSERTS SHALL BE GALVANIZED AND HAVE THE FOLLOWING MINIMUM WORKING LOADS(A 3:1 RATIO OF ULTIMATE TO WORKING VALUES IS ASSUMED):

BOLT DIAMETER	SHEAR	WORKING LOAD TENSION
1/2"	2,200 LBS.	2,820 LBS.
5/8"	3,000 LBS.	3,620 LBS.
3/4"	3,100 LBS.	3,660 LBS.

THREADED COIL RODS, COIL NUTS, ETC., USED IN CONJUNCTION WITH CONCRETE INSERTS, SHALL HAVE A WORKING LOAD EQUAL TO OR GREATER THAN THE CORRESPONDING CONCRETE INSERT. CONTRACTOR SHALL SUBMIT MANUFACTURER'S SIZE AND STRENGTH DATA PRIOR TO CONSTRUCTION TO THE STRUCTURAL ENGINEER THRU THE ARCHITECT. VALUES LISTED ABOVE ARE FOR RICHMOND STRUCTURAL CONNECTION INSERTS.

EXPANSION AND SCREW ANCHORS:

USE STUD TYPE EXPANSION ANCHOR WITH A SINGLE PIECE WEDGE ONLY WHERE NOTED ON PLANS. IF USE IS REQUESTED FOR OTHER THAN WHERE NOTED CONTACT STRUCTURAL ENGINEER THROUGH ARCHITECT FOR APPROVAL.

CONTRACTOR SHALL SUBMIT MANUFACTURER'S SIZE AND STRENGTH DATA TO ENGINEER THROUGH ARCHITECT PRIOR TO CONSTRUCTION. INSTALL ALL BOLTS AS OUTLINED IN MANUFACTURER'S SPECIFICATIONS, UTILIZING PROPER SIZE AND TYPE OF DRILL, CLEANING HOLE, DRIVING AND TIGHTENING BOLT.

IN CONCRETE:

ANCHORS USED MUST HAVE ICC APPROVAL AND INCLUDE HILTI KWIK BOLT TZ2 (ESR-4266), AND SIMPSON STRONG BOLT-2 (ESR-3037), AND DEWALT POWER-STUD+SD2 (ESR-2502), AND SIMPSON TITEN HD (ESR-2713), HILTI KWIK HUS-EZ (ESR-3027), AND DEWALT SCREW-BOLT+ (ESR-3889) OR APPROVED EQUAL.

IN MASONRY:

ANCHORS USED MUST HAVE ICC APPROVAL AND INCLUDE HILTI KWIK BOLT 3 (ESR-1385), AND SIMPSON STRONG BOLT-2 (ES-240), DEWALT POWER-STUD+SD1 (ESR-2966), HILTI KWIK HUS-EZ (ESR-3056) AND SIMPSON TITEN HD (ESR-1056), AND DEWALT SCREW-BOLT+ (ESR-4042) OR APPROVED EQUAL.

EPOXY ANCHORS IN CONCRETE AND MASONRY:

INJECTABLE ADHESIVE SHALL BE USED FOR INSTALLATION OF REINFORCING STEEL DOWELS OR THREADED ANCHOR RODS AND INSERTS INTO NEW OR EXISTING CONCRETE OR SOLID GROUTED CONCRETE MASONRY UNITS ONLY WHERE SPECIFIED ON PLANS. IF USE IS REQUESTED FOR OTHER THAN WHERE NOTED CONTACT STRUCTURAL ENGINEER THROUGH ARCHITECT FOR APPROVAL. ADHESIVE SHALL BE FURNISHED IN SIDE BY SIDE PACKS WHICH KEEP COMPONENT A AND COMPONENT B SEPARATE. USE ONLY INJECTION TOOLS AND STATIC MIXING NOZZLES RECOMMENDED BY MANUFACTURER. MANUFACTURER'S INSTRUCTIONS SHALL BE FOLLOWED.

IN CONCRETE:

ANCHORS USED MUST HAVE I.C.C. APPROVAL IN CRACKED CONCRETE AND INCLUDE SIMPSON SET-3G (ESR-4057), HILTI HIT-RE500-V3 (ESR-3814), DEWALT PURE110+ (ESR-3298) OR APPROVED EQUIVALENT. THE USE OF ANY EPOXY ANCHOR MUST BE APPROVED BY THE ENGINEER OF RECORD PRIOR TO INSTALLATION.

IN MASONRY:

ANCHORS USED MUST HAVE ICC APPROVAL AND INCLUDE HILTI KWIK BOLT 3 (ESR-1385), AND SIMPSON STRONG BOLT-2 (ES-240), DEWALT POWER-STUD+SD1 (ESR-2966), HILTI KWIK HUS-EZ (ESR-3056) AND SIMPSON TITEN HD (ESR-1056), AND DEWALT SCREW-BOLT+ (ESR-4042) OR APPROVED EQUAL.

STRUCTURAL FILL:

ALL FILL PLACED TO SUPPORT SLABS ON GRADE, BEHIND PERMANENT WALLS, AND AROUND ALL DRAINS SHALL CONSIST OF WELL GRADED, GRANULAR MATERIAL PER THE SPECIFICATIONS. SOILS FOR STRUCTURAL FILL SHALL BE APPROVED BY THE GEOTECHNICAL ENGINEER. STRUCTURAL FILL SHALL BE PLACED ON SOUND NATIVE MATERIAL. PROOF-ROLL CUT AREAS WHICH PROVIDE SUPPORT FOR PERMANENT STRUCTURES. AREAS WHICH ARE EXCESSIVELY YIELDING, AS DETERMINED BY THE CONTINUOUS OBSERVATION OF THE GEOTECHNICAL ENGINEER, SHALL BE OVEREXCAVATED AND REPLACED WITH STRUCTURAL FILL. STRUCTURAL FILL SHALL BE PLACED PER THE SPECIFICATION. USE LEAN CONCRETE FILL BELOW ALL PIPES EXISTING OUT OF BASEMENT WALL, FULL HEIGHT OF WALL. CONCRETE SHALL CONTAIN 2 SACKS OF CEMENT PER YARD.

NOTES ON CRACKING OF CONCRETE STRUCTURES:

CRACKING IS INHERENT TO THE MATERIAL PROPERTIES OF CONCRETE CONSTRUCTION WHILE EVERY EFFORT HAS BEEN MADE TO MINIMIZE THE EFFECTS OF UNSIGHTLY CRACKING, THE PRESENCE OF CRACKS ARE NORMAL AND UNAVOIDABLE. THE DESIGN OF THE CONCRETE STRUCTURAL ITEMS HAVE BEEN ANALYZED USING A "CRACKING SECTION." THE PRESENCE OF THE CRACKING SHOULD NOT BE CONSIDERED DETRIMENTAL TO THE STRUCTURE. CRACKS LARGER THAN 5 MILS SHALL BE FILLED AND SEALED WITH AN APPROVED CRACK FILLER TO PREVENT FUTURE DETERIORATION. ALLOWANCE SHALL BE MADE IN THE CONSTRUCTION BUDGET FOR SEALING OF SUCH CRACKS. IN SOME CASE, CRACKS DO NOT APPEAR UNTIL WELL AFTER CONSTRUCTION HAS BEEN COMPLETED. IT IS THE RESPONSIBILTY OF THE OWNER TO MAINTAIN THE STRUCTURE PROPERLY OVER THE LIFE OF THE STRUCTURE. CONCRETE CRACKS, SHOULD THEY OCCUR, SHALL BE FILLED AND SEALED TO PREVENT PREMATURE DETERIORATION OF THE STRUCTURE.

SHOP DRAWINGS:

SHOP DRAWINGS SHALL BE SUBMITTED FOR ALL STRUCTURAL ITEMS IN ADDITION TO ITEMS REQUIRED BY ARCHITECTURAL SPECIFICATIONS.

THE CONTRACTOR SHALL REVIEW ALL SHOP DRAWINGS PRIOR TO SUBMITTAL. ITEMS NOT IN ACCORDANCE WITH CONTRACT DOCUMENTS SHALL BE FLAGGED UPON HIS REVIEW.

VERIFY ALL DIMENSIONS WITH ARCHITECT AND ALL FINISHED GRADE WITH CIVIL DRAWINGS.

ANY CHANGES, SUBSTITUTIONS, OR DEVIATIONS FROM CONTRACT DOCUMENTS SHALL BE CLOUDED BY MANUFACTURER OR FABRICATOR. ANY OF THE AFOREMENTIONED WHICH ARE NOT CLOUDED OR FLAGGED BY SUBMITTING PARTIES, SHALL NOT BE CONSIDERED APPROVED AFTER ENGINEER'S REVIEW, UNLESS NOTED ACCORDINGLY.

THE ENGINEER HAS THE RIGHT TO APPROVE OR DISAPPROVE ANY CHANGES TO CONTRACT DOCUMENTS AT ANYTIME BEFORE OR AFTER SHOP DRAWING REVIEW.

THE SHOP DRAWINGS DO NOT REPLACE THE CONTRACT DOCUMENTS. ITEMS OMITTED OR SHOWN INCORRECTLY AND ARE NOT FLAGGED BY THE STRUCTURAL ENGINEER OR ARCHITECT ARE NOT TO BE CONSIDERED CHANGES TO CONTRACT DOCUMENTS. IT IS THE CONTRACTOR'S RESPONSIBILITY TO MAKE SURE ITEMS ARE CONSTRUCTED TO CONTRACT DOCUMENTS.

THE ADEQUACY OF ENGINEERING DESIGNS AND LAYOUT PERFORMED BY OTHERS RESTS WITH THE DESIGNING OR SUBMITTING AUTHORITY.

REVIEWING IS INTENDED ONLY AS AN AID TO THE CONTRACTOR IN OBTAINING CORRECT SHOP DRAWINGS. RESPONSIBILITY FOR CORRECTNESS SHALL REST WITH THE CONTRACTOR.

DEFERRED SUBMITTALS: (2021 IBC 107.3.4.1)

FOR THE PURPOSES OF THIS SECTION, DEFERRED SUBMITTALS ARE DEFINED AS THOSE PORTIONS OF THE DESIGN WHICH ARE NOT SUBMITTED AT THE TIME OF THE APPLICATION AND THAT ARE TO BE SUBMITTED TO THE BUILDING OFFICIAL WITHIN A SPECIFIED PERIOD.

DOCUMENTS FOR DEFERRED SUBMITTAL ITEMS SHALL BE SUBMITTED TO THE PROFESSIONAL IN RESPONSIBLE CHARGE FOR REVIEW. THE CONTRACTOR SHALL FORWARD THE REVIEWED DOCUMENTS TO BUILDING OFFICAL WITH A NOTATION INDICATING THAT THE DEFERRED SUBMITTAL DOCUMENTS HAVE BEEN REVIEWED AND BEEN FOUND TO BE IN GENERAL CONFORMANCE TO THE DESIGN OF THE BUILDING. THE DEFERRED SUBMITTAL ITEMS SHALL NOT BE INSTALLED UNTIL THE DESIGN AND SUBMITTAL DOCUMENTS HAVE BEEN APPROVED BY THE BUILDING OFFICIAL.

DEFERRED SUBMITTAL ITEMS:

STEEL JOISTS / JOIST GIRDERS
RACKING/ RACKING ATTACHMENTS/RACKING SEISMIC BRACING
ROOF TOP MECHANICAL ATTACHMENTS
EXTERIOR STEEL STUDS
ROOF ACCESS LADDER PLATFORM

STRUCTURAL SHEET INDEX

SHEET	DESCRIPTION	SHEET	DESCRIPTION
S001	GENERAL STRUCTURAL NOTES	S305	TILT PANEL TYPES
S002	GENERAL STRUCTURAL NOTES	S401	TYPICAL DETAILS
S003	GENERAL STRUCTURAL NOTES	S402	TYPICAL DETAILS
S004	GENERAL STRUCTURAL NOTES	S403	TYPICAL DETAILS
S005	WIND PRESSURES COMPONENTS AND CLADDING	S501	FOUNDATION DETAILS
S006	SCHEDULES	S502	FOUNDATION DETAILS
S111	BUILDING 1 FOUNDATION PLAN	S503	FOUNDATION DETAILS
S112	BUILDING 1 FOUNDATION PLAN	S504	FOUNDATION DETAILS
S211	BUILDING 1 ROOF FRAMING PLAN	S601	TILT PANEL DETAILS
S212	BUILDING 1 ROOF FRAMING PLAN	S602	TILT PANEL DETAILS
S213	BUILDING 1 ROOF FRAMING PLAN	S701	FRAMING DETAILS
S301	BUILDING 1 PANEL ELEVATIONS	S702	FRAMING DETAILS
S302	BUILDING 1 PANEL ELEVATIONS	S703	FRAMING DETAILS
S303	TILT PANEL TYPES	S704	FRAMING DETAILS
S304	TILT PANEL TYPES	S705	FRAMING DETAILS

Bdg
Butler Design Group Inc.
architects & planners
5013 East Washington St. #100
Phoenix, Arizona 85034
Phone 602-957-1800

PROFESSIONAL STRUCTURAL ENGINEER
No. 14160325
ROBERT HALLIDAY
STATE OF UTAH
2/25/26

OWNERSHIP OF INSTRUMENTS OF SERVICE
All reports, plans, specifications, computer files, field data, notes and other documents and instruments prepared by the design professional as instruments of service shall remain the property of the design professional. The design professional shall retain all common law, statutory and other reserved rights, including the copyright thereto.

PROPERTY RESERVE

PK Associates, L.L.C.
6900 E. Belleview Ave. #200
Greenwood Village, CO 80111
Phone: (720) 799-1058
Email: cadd@pkastructural.com
Website: www.pkastructural.com
Proj: 24295A

700 SOUTH
752 SOUTH 6200 WEST
SALT LAKE CITY, UTAH

Current Submittal: 100% CD SUBMITTAL
01/09/26

Revisions:

Project No.: 24295A
Issue Date: 02/25/2026
Drawn By: PKA
Project Manager: RH
Title: GENERAL STRUCTURAL NOTES

S001

GENERAL STRUCTURAL NOTES

APPLY UNLESS NOTED OTHERWISE

GENERAL:

ENTIRE CONTRACT DOCUMENTS SHALL BE USED TO BUILD BUILDING. SOME CRITICAL ITEMS REQUIRED BY OTHER DISCIPLINES MAY NOT BE SHOWN ON STRUCTURAL DRAWING (i.e. WALL, FLOOR AND ROOF OPENING, ARCHITECTURAL, MECHANICAL AND PLUMBING LOADS, SUPPORT PLATES ETC.)

ITEMS SHOWN BY OTHER DISCIPLINES WITH REFERENCE TO STRUCTURAL DRAWING BUT NOT SHOWN ON THESE STRUCTURAL DOCUMENTS SHALL BE CONSIDERED DESIGN BUILD ITEMS. CONTRACTOR SHALL SUBMIT DESIGN BY OTHERS FOR REVIEW.

THE STRUCTURAL CONSTRUCTION DOCUMENTS REPRESENT THE FINISHED STRUCTURE. THEY DO NOT INDICATE THE METHOD OF CONSTRUCTION. THE CONTRACTOR SHALL PROVIDE ALL MEASURES NECESSARY TO PROTECT THE STRUCTURE DURING CONSTRUCTION. SUCH MEASURES SHALL INCLUDE, BUT NOT BE LIMITED TO, BRACING, SHORING FOR LOADS DUE TO CONSTRUCTION EQUIPMENT, ETC. THE STRUCTURAL ENGINEER SHALL NOT BE RESPONSIBLE FOR THE CONTRACTOR'S MEANS, METHODS, TECHNIQUES, SEQUENCES FOR PROCEDURE OF CONSTRUCTION, OR THE SAFETY PRECAUTIONS AND THE PROGRAMS INCIDENT THERETO (NOR SHALL OBSERVATION VISITS TO THE SITE INCLUDE INSPECTION OF THESE ITEMS).

CONSTRUCTION MATERIALS SHALL BE SPREAD OUT IF PLACED ON FRAMED CONSTRUCTION. LOAD SHALL NOT EXCEED THE DESIGN LIVE LOAD PER SQUARE FOOT.

WHERE REFERENCE IS MADE TO VARIOUS TEST STANDARDS FOR MATERIALS, SUCH STANDARDS SHALL BE THE LATEST EDITION AND/OR ADDENDA.

ESTABLISH AND VERIFY ALL OPENINGS AND INSERTS FOR ARCHITECTURAL, MECHANICAL, PLUMBING AND ELECTRICAL WITH APPROPRIATE TRADES, DRAWINGS AND SUBCONTRACTORS PRIOR TO CONSTRUCTION.

OPTIONS ARE FOR CONTRACTOR'S CONVENIENCE. IF HE CHOOSES AN OPTION, CONTRACTOR SHALL BE RESPONSIBLE FOR ALL NECESSARY CHANGES AND SHALL COORDINATE ALL DETAILS.

NOTES AND DETAILS ON DRAWINGS SHALL TAKE PRECEDENCE OVER GENERAL STRUCTURAL NOTES AND TYPICAL DETAILS. WHERE NO DETAILS ARE SHOWN, CONSTRUCTION SHALL CONFORM TO SIMILAR WORK ON THE PROJECT.

ALL DIMENSIONS SHOWN (INCLUDING ELEVATIONS) ON STRUCTURAL DRAWINGS ARE TO ASSIST CONTRACTOR IN VERIFICATION. SCALING DIMENSIONS FROM DRAWINGS IS NOT PERMITTED. LOCATION OF ALL ITEMS SHALL BE DETERMINED BY DIMENSIONS OR NOTES ONLY; DO NOT USE GRAPHIC APPEARANCE TO ASSUME SPECIFIC LOCATIONS.

CONTRACTOR SHALL BE RESPONSIBLE FOR VERIFICATION OF ALL DIMENSIONS WITH ARCHITECTURAL AND FINISHED GRADE WITH CIVIL DRAWINGS PRIOR TO START OF CONSTRUCTION. RESOLVE ANY DISCREPANCY WITH THE ARCHITECT.

TYPICAL DETAILS MAY NOT NECESSARILY BE CUT ON PLANS, BUT APPLY UNLESS NOTED OTHERWISE.

WHERE DISCREPANCIES OCCUR BETWEEN PLANS, DETAILS, GENERAL STRUCTURAL NOTES AND SPECIFICATIONS, THE GREATER REQUIREMENTS SHALL GOVERN.

ANY ENGINEERING DESIGN, PROVIDED BY OTHERS AND SUBMITTED FOR REVIEW, SHALL BEAR THE SEAL OF AN ENGINEER REGISTERED IN THE STATE OF JURISDICTION.

SUPPLIER OF ENGINEERED STRUCTURAL COMPONENTS (i.e. STEEL JOISTS, STAIRS, PRECAST ITEMS) SHALL BE RESPONSIBLE FOR COMPLETE DESIGN AND SHALL USE ENTIRE CONTRACT DOCUMENTS TO INCLUDE ALL LOADS AND DETAIL REQUIREMENTS FROM ALL DISCIPLINES. SUPPLIER SHALL PROVIDE ADDITIONAL MATERIAL REQUIRED TO MEET ALL THEIR REQUIREMENTS FOR INSTALLATION (i.e. WIDER BEARING PLATES, SHIMS, ERECTION BOLTS ETC.).

STRUCTURAL STEEL SUPPLIER SHALL FURNISH BOLTS FOR OSHA CONNECTIONS (SEE DRAWINGS FOR DETAILS).

WALL SHORING SHALL BE INSTALLED PRIOR TO BACKFILLING BEHIND ALL BUILDING RETAINING WALLS, UNLESS ALL RESTRAINING SLABS ARE INSTALLED. USE HANDTAPPING ONLY WHEN WITHIN 8'–0", OR WITHIN HALF THE WALL HEIGHT OF BACKFILLED WALL.

CONTINUOUS FOUNDATION DRAIN PIPES (FRENCH DRAINS) OR WEEP HOLES SHALL BE PROVIDED BEHIND ALL BASEMENT WALLS AND ALL EXTERIOR RETAINING WALLS THAT RETAIN MORE THAN 3'–0" OF SOIL. WEEP HOLES WHERE USED SHALL BE 2" IN DIAMETER AT 6'–0" O.C. MAXIMUM.

BUILDING TOLERANCES:

STANDARD TOLERANCES SHALL BE BASED ON THE REQUIREMENTS OF THE AISC CODE OF STANDARD PRACTICE AND ACI 117, STANDARD SPECIFICATIONS FOR TOLERANCES FOR CONCRETE CONSTRUCTION AND MATERIALS.

SEQUENCING CONSTRUCTION AND LATERAL STABILITY:

THE STRUCTURAL COMPONENTS BY THEMSELVES ARE A NON–SELF–SUPPORTING STRUCTURE. LATERAL FORCES DUE TO WIND, EARTHQUAKE, OR SOIL ARE CARRIED BY THE ROOF AND FLOOR DIAPHRAGMS TO THE LATERAL SYSTEM. CERTAIN ELEMENTS SHOWN ON OR LOCAL STABILITY OF OTHER ELEMENTS (SUCH AS BEAMS, COLUMNS, AND WALLS). IF, DUE TO SEQUENCING OF CONSTRUCTION, THESE STABILITY ELEMENTS ARE NOT IN PLACE, THE CONTRACTOR SHALL RETAIN A LICENSED STRUCTURAL ENGINEER WHO SHALL INVESTIGATE WHERE TEMPORARY SHORING/BRACING IS REQUIRED, AND SHALL DESIGN THIS TEMPORARY SHORING/BRACING. THE CONTRACTOR SHALL PROVIDE THIS SHORING/BRACING UNTIL THE REQUIRED STRUCTURAL ELEMENTS AND THEIR CONNECTIONS HAVE BEEN INSTALLED AND REACH THEIR FINAL DESIGN STRENGTHS.

MISCELLANEOUS:

REFER TO ARCHITECTURAL, MECHANICAL, ELECTRICAL, CIVIL, ELEVATOR, OR OTHER SPECIALTY ENGINEERING DRAWINGS FOR DIMENSIONS NOT SHOWN, INCLUDING BUT NOT LIMITED TO: SIZE AND LOCATION OF CURBS, EQUIPMENT HOUSEKEEPING PADS, WALL AND FLOOR OPENINGS, BLOCKOUTS, FLOOR DEPRESSIONS, SUMPS, DRAINS, ANCHOR BOLTS, EMBEDDED ITEMS, ARCHITECTURAL TREATMENT, ETC. CONTRACTOR SHALL VERIFY DIMENSIONS AND RESOLVE DISCREPANCIES OR CONFLICTS PRIOR TO CONSTRUCTION. WHERE SECTIONS ARE INDICATED ON THE PLAN BY A NUMBER AND A DRAWING NUMBER THUS, 1/S501, THE INDICATED SECTION (1) IS SHOWN ON STRUCTURAL DRAWING S501.

ALL WINDOW SYSTEMS SHALL BE DESIGNED TO ACCOMMODATE VERTICAL DEFLECTION OF THE STRUCTURE OF 1/2" MINIMUM LIVE LOAD DEFLECTION, UNLESS GREATER VALUE IS NOTED ON PLANS OR DETAILS.

FLOOR FLATNESS/LEVELNESS SHALL MEET ARCHITECTURAL SPECIFICATIONS (1/4" IN 10 FOOT MINIMUM LEVELNESS UNLESS TIGHTER REQUIREMENT IN SPECIFICATIONS) IN HEIGHT FOR ALL STRUCTURAL SYSTEMS. CONTRACTOR SHALL INCLUDE COST FOR LEVELING ALL FLOORS. FOR ESTIMATING PURPOSES ONLY, ASSUME 1/2" THICK LEVELING AGENT OVER 15% OF FLOOR AREA.

FABRICATOR APPROVAL:

SPECIAL INSPECTIONS NOTED ABOVE APPLY TO SHOP FABRICATED ASSEMBLIES IN ADDITION TO ON–SITE WORK UNLESS THE FABRICATOR IS AN "APPROVED FABRICATOR" AS DEFINED IN 2021 IBC.

NOTE TO CONTRACTOR REGARDING PRICING/BIDDING OF CITY SUBMITTAL DRAWINGS:

THESE DRAWING HAVE BEEN PREPARED FOR CITY SUBMITTAL, AND ARE NOT TO BE CONSIDERED 100% CONSTRUCTION DOCUMENTS UNTIL CITY PLAN REVIEW HAS BEEN COMPLETED AND FINAL BUILDING PERMIT HAS BEEN ISSUED. IF THESE DOCUMENTS ARE TO BE USED FOR PRICING, BID, OR STEEL MILL ORDER, THE CONTRACTOR SHALL PROVIDE IN THE PROJECT BUDGET AN ALLOWANCE FOR POTENTIAL CHANGES BETWEEN THE CITY SUBMITTAL DRAWINGS AND THE FINAL APPROVED SUBMITTAL AND CONSTRUCTION DOCUMENTS. ADDITIONALLY, MISCELLANEOUS ITEMS MAY NOT BE SHOWN ON THESE DRAWINGS. THESE ITEMS INCLUDE, BUT ARE NOT LIMITED TO, ELEVATOR AND EQUIPMENT SUPPORTS, BLOCKOUTS, ETC. REFER TO ARCHITECTURAL, MECHANICAL, ELECTRICAL, AND OTHER SPECIALTY DRAWINGS FOR ADDITIONAL INFORMATION. THE CONSTRUCTION BUDGET SHALL INCLUDE THESE ITEMS. THE STRUCTURAL ENGINEER WILL NOT BE RESPONSIBLE FOR CHANGE ORDER COSTS INCURRED (INCLUDING DISCARDED MATERIAL COSTS) DUE TO BIDDING OR STEEL MILL ORDER FROM THESE DRAWINGS. CONTACT STRUCTURAL ENGINEER FOR CLARIFICATION IF THE SCOPE AND QUANTITY OF ALLOWANCE TO BE CARRIED IS NOT CLEAR.

INSTRUCTIONS TO BIDDERS CONTINGENCIES:

1. UNDER NO CIRCUMSTANCES SHALL THESE DRAWINGS BE "FINAL BID" UNTIL THE PROJECT IS FULLY PERMITTED.
2. ALL PRELIMINARY PRICING EFFORTS SHALL BE CONSIDERED TO BE ESTIMATES ONLY AND SHALL INCLUDE THE NECESSARY CONTINGENCIES, ALLOWANCES, ALTERNATES, ETC. AS APPROPRIATE TO ACCOUNT FOR MODIFICATIONS AND ADDITIONS THAT WILL OCCUR TO THE DRAWINGS DURING THE FINALIZATION OF THE DESIGN AND PERMITTING.
3. THE OWNER OR CONTRACTOR SHALL UTILIZE THE FOLLOWING MINIMUM CONTINGENCIES FOR EACH OF THE STRUCTURAL ELEMENT COSTS TO BE USED AT THE SOLE DISCRETION OF THE STRUCTURAL ENGINEER:

CONSTRUCTION DOCUMENTS/FINAL BID 3% MINIMUM

INSTRUCTIONS TO BIDDERS CONTINGENCIES (CONTINUED):

ALL OF THE "FINAL BID" CONTINGENCIES NOT USED BY THE STRUCTURAL ENGINEER SHALL BE REFUNDED TO THE OWNER PRIOR TO THE CLOSEOUT OF THE PROJECT.
4. ANY MODIFICATIONS, DELETIONS OR ELIMINATIONS TO THE STRUCTURAL BIDDING AND CONTINGENCY REQUIREMENTS, WITHOUT THE CONSENT OF THE STRUCTURAL ENGINEER, SHALL AUTOMATICALLY INDEMNIFY THE STRUCTURAL ENGINEER OF ANY COSTS THAT MAY ARISE DURING THE DESIGN AND CONSTRUCTION OF THE PROJECT.
5. WHERE DISCREPANCIES OCCUR WITHIN THE DRAWINGS THE CONTRACTOR WILL EITHER RESOLVE THE DISCREPANCIES WITH THE ARCHITECT BEFORE BIDDING OR INCLUDE THE GREATER COST ITEM IN THE BID AND RESOLVE THE DISCREPANCY PRIOR TO CONSTRUCTION.

STRUCTURAL OBSERVATION:

ENGINEER OF RECORD SHALL PROVIDE VISUAL OBSERVATION OF THE STRUCTURAL SYSTEM, FOR GENERAL CONFORMANCE TO THE APPROVED PLANS AND SPECIFICATIONS, AT SIGNIFICANT CONSTRUCTION STAGES AND AT THE COMPLETION OF THE STRUCTURAL SYSTEM. CONTRACTOR IS REQUIRED FOR COORDINATING THE TIMING OF SITE VISITS AND SHALL INCLUDE A MINIMUM OF 3 VISITS. THESE VISITS ARE TO BE PAID BY THE CONTRACTOR. STRUCTURAL OBSERVATION DOES NOT INCLUDE OR WAIVE THE RESPONSIBILITY FOR THE INSPECTIONS REQUIRED BY THE BUILDING CODE (NOTED ABOVE).

CONTRACTOR RESPONSIBILITY:

EACH CONTRACTOR OR SUB–CONTRACTOR RESPONSIBLE FOR THE CONSTRUCTION OF THE WIND AND/OR SEISMIC RESISTING SYSTEM THAT IS LISTED IN THE STATEMENT OF SPECIAL INSPECTIONS SHALL SUBMIT A WRITTEN STATEMENT OF RESPONSIBILITY TO THE BUILDING OFFICIAL AND THE OWNER PRIOR TO THE COMMENCEMENT OF WORK REQUIRING SPECIAL INSPECTION. THE CONTRACTOR'S STATEMENT OF RESPONSIBILITY SHALL CONTAIN ACKNOWLEDGMENT OF AWARENESS OF THE SPECIAL REQUIREMENTS CONTAINED IN THE STATEMENT OF SPECIAL INSPECTIONS.

INTERPRETATION OF DRAWINGS

LOCATION OF INFORMATION

ITEM	INFORMATION	LOCATION	SHEET
FOOTINGS	SIZE, REINFORCING DEPTH OF FOOTING	SCHEDULE (F) (WF) GENERAL STRUCTURAL NOTES (G.S.N.) SEE PLAN(S) AND/OR DETAILS	S006 S001
FRAMING MEMBERS	TYPE, SIZE, CONNECTION CAMBER, BEARING PLATES	SCHEDULE (L)	S006
COLUMNS	TYPE, SIZE, BASE PLATES, REINFORCING	SCHEDULE (C)	S006
MASONRY WALLS	TYPICAL REINFORCING SPECIAL REINFORCING	GENERAL STRUCTURAL NOTES (G.S.N.) SEE PLAN(S) AND/OR DETAILS	S001
CONCRETE WALLS	THICKNESS, REINFORCING	SEE PLAN(S) AND/OR DETAILS	S303

PLAN LEGEND

SYMBOL	DESCRIPTION	REMARKS
101 / 201 PLAN VIEW	DETAIL CUTS SHOWN ON PLANS	TYPICAL DETAILS ARE TWO DIGIT SERIES NUMBERS FOUNDATION DETAILS ARE 100 SERIES NUMBERS PANEL DETAILS ARE 200 SERIES NUMBERS FRAMING DETAILS ARE 300 SERIES NUMBERS
	TILT UP CONCRETE WALL U.N.O.	SEE PLANS AND SCHEDULES FOR REINFORCING
	8" MASONRY WALL	SEE PLANS AND SCHEDULES FOR REINFORCING
	STEEL MEMBERS	SEE G.S.N., PLANS & SCHED. FOR SIZE AND SPACING
	MECHANICAL EQUIPMENT	SEE PLANS FOR UNIT WEIGHTS
	OPENING IN FRAMING	SEE NOTE #4

NOTES

1. FOR MATERIAL STRENGTHS, SEE GENERAL STRUCTURAL NOTES
2. VERIFY ALL DIMENSION WITH ARCHITECTURAL DRAWINGS PRIOR TO START OF CONSTRUCTION – RESOLVE ANY DISCREPANCIES WITH ARCHITECT.
3. FOR CLARITY, ALL EXTERIOR SLABS AND SIDEWALKS MAY NOT BE SHOWN. FOR EXACT DIMENSIONS, LOCATIONS, JOINT AND SCORE LINES, SEE ARCHITECTURAL DRAWINGS
4. FOR CLARITY, ALL OPENINGS MAY NOT BE SHOWN ON FRAMING PLANS. FOR EXACT SIZE, NUMBER, AND LOCATION OF OPENINGS, SEE ARCHITECTURAL, MECHANICAL, ELECTRICAL AND PLUMBING DRAWINGS. FOR FRAMING AT OPENINGS, SEE TYPICAL STRUCTURAL DETAILS. VERIFY ALL SIZES, WEIGHTS AND LOCATIONS OF MECHANICAL EQUIPMENT WITH MECHANICAL ENGINEER AND MECHANICAL CONTRACTOR THROUGH ARCHITECT.
5. DETAILS MARKED "TYPICAL" MAY NOT BE CUT ON PLANS.
6. CONC C.J. – AS SHOWN ON PLAN INDICATES LOCATION OF EITHER KEYED OR SAW CUT CONTROL JOINT IN SLAB ON GRADE AT CONTRACTOR'S OPTION, SEE GENERAL STRUCTURAL NOTES AND PLANS.
7. MAS C.J. – AS SHOWN ON PLAN INDICATES MASONRY CONTROL JOINT IN MASONRY WALL, SEE G.S.N. AND TYPICAL DETAIL.
8. FOR CLARITY, DETAILS MAY SHOW ONLY ONE SIDE OF FRAMING CONDITION.
9. CONTRACTOR TO VERIFY, AND BE RESPONSIBLE FOR VARIATIONS IN CONCRETE QUANTITY DUE TO CAMBER, CONSTRUCTION DEAD LOAD DEFLECTIONS AND/OR TOLERANCES OF STRUCTURAL STEEL ELEMENTS (i.e. BEAMS, STEEL DECK, ETC.) AND PRECAST CONCRETE ELEMENTS.
10. ALL SCHEDULE MARK DESIGNATIONS MAY NOT NECESSARILY BE FOUND ON THE PLANS WHERE THE SCHEDULES OCCUR. SCHEDULES ARE TYPICAL TO THE PROJECT.

ABBREVIATIONS

A.B.C.	AGGREGATE BASE COURSE	I.F.W.	INSIDE FACE OF WALL
A/C	AIR CONDITIONER	HORIZ	HORIZONTAL
A.F.F.	ABOVE FINISHED FLOOR	K(KIP)	1000 POUNDS
ALT.	ALTERNATE	L.L.	LIVE LOAD
A.B.	ANCHOR BOLT	LBS (#)	POUNDS
@	AT (MEASUREMENT)	LLH	LONG LEG HORIZONTAL
BM	BEAM	LLV	LONG LEG VERTICAL
B.F.F	BELOW FINISHED FLOOR	MFR('S)	MANUFACTURER('S)
B.O.B.	BOTTOM OF BEAM	MAS C.J.	MASONRY CONTROL JOINT
B.O.D.	BOTTOM OF DECK	MECH'L	MECHANICAL
B.O.F.	BOTTOM OF FOOTING	N/A	NOT APPLICABLE
BRG	BEARING	N.T.S.	NOT TO SCALE
C.I.P.	CAST IN PLACE	O.C.	ON CENTER
C.L.	CENTERLINE	O.F.W.	OUTSIDE FACE OF WALL
C.L.B.	CENTERLINE OF BEAM	OPP	OPPOSITE
C.L.C.	CENTERLINE OF COLUMN	P.C.	PRECAST CONCRETE
C.L.F.	CENTERLINE OF FOOTING	P.J.	PANEL JOINT
C.L.W.	CENTERLINE OF WALL	PLF	POUNDS PER LINEAR FOOT
CLR	CLEAR	PLYWD	PLYWOOD
CONC	CONCRETE	PREFAB	PREFABRICATED
CONC C.J.	CONCRETE CONTROL JOINT	PSF	POUNDS PER SQUARE FOOT
CONC S.J.	CONCRETE SAWCUT JOINT	PSI	POUNDS PER SQUARE INCH
C.M.U.	CONCRETE MASONRY UNIT	REINF	REINFORCING
CONN	CONNECTION	SLH	SHORT LEG HORIZONTAL
CONT	CONTINUOUS	SLV	SHORT LEG VERTICAL
D.L.	DEAD LOAD	SIM	SIMILAR
ø OR DIA.	DIAMETER	SQ.	SQUARE
DN	DOWN	STD	STANDARD
DWG(S)	DRAWING(S)	T.L.	TOTAL LOAD
E.O.S.	EDGE OF SLAB	T.O.B.	TOP OF BEAM
EQ	EQUAL	T.O.C.	TOP OF CONCRETE
EQUIP	EQUIPMENT	T.O.D.	TOP OF DECK
EXP. BOLT	EXPANSION BOLT	T.O.F.	TOP OF FOOTING
EXP. JT (E.J.)	EXPANSION JOINT	T.O.L.	TOP OF LEDGER
E.W.	EACH WAY	T.O.M.	TOP OF MASONRY
F.F.	FINISHED FLOOR	T.O.P.	TOP OF PLATE
F.O.M.	FACE OF MEMBER	T.O.S.	TOP OF STEEL
F.O.S.	FACE OF STEEL	T.O.W.	TOP OF WALL
F.O.W.	FACE OF WALL	TYP	TYPICAL
GA	GAGE	U.N.O.	UNLESS NOTED OTHERWISE
GALV	GALVANIZED	VERT	VERTICAL
G.S.N.	GENERAL STRUCTURAL NOTES	W.W.F.	WELDED WIRE FABRIC
GLB (GLULAM)	GLUED–LAMINATED BEAM	W/	WITH
		W/O	WITHOUT

Butler Design Group Inc.
architects & planners
5013 East Washington St. #100
Phoenix, Arizona 85034
Phone 602-957-1800

PROFESSIONAL STRUCTURAL ENGINEER No. 14160325 ROBERT HALLIDAY STATE OF UTAH EXPIRES

OWNERSHIP OF INSTRUMENTS OF SERVICE
REPORTS, PLANS, SPECIFICATIONS, COMPUTER FILES, FIELD DATA, notes and other documents and instruments prepared by the design professional as instruments of service shall remain the property of the design professional. The design professional shall retain all common law, statutory and other reserved rights, including the copyright thereto.

PROPERTY RESERVE

PK Associates, L.L.C.
6900 E. Belleview Ave. #200
Greenwood Village, CO 80111
Phone: (720) 799-1058
Email: cadd@pkastructural.com
Website: www.pkastructural.com
Proj: 24295A

700 SOUTH
752 SOUTH 6200 WEST
SALT LAKE CITY, UTAH

Current Submittal: 100% CD SUBMITTAL
01/09/26

Revisions:

Project No.:	24295A
Issue Date:	02/25/2026
Drawn By:	PKA
Project Manager:	RH

Title: GENERAL STRUCTURAL NOTES

S002

GENERAL STRUCTURAL NOTES

APPLY UNLESS NOTED OTHERWISE

TABLE J6.1
VISUAL INSPECTION TASKS PRIOR TO WELDING

VISUAL INSPECTION TASKS PRIOR TO WELDING	QC		QA	
	TASK	DOC.	TASK	DOC.
MATERIAL IDENTIFICATION (TYPE,GRADE)	O	–	O	–
WELDER IDENTIFICATION SYSTEM	O	–	O	–
FIT–UP OF GROOVE WELDS (INCLUDING JOINT GEOMETRY) • JOINT PREPARATION • DIMENSIONS (ALIGNMENT, ROOT OPENING, ROOT FACE, BEVEL) • CLEANLINESS (CONDITION OF STEEL SURFACES) • TACKING (TACK WELD QUALITY AND LOCATION) • BACKING TYPE AND FIT (IF APPLICABLE)	P/O**	–	O	–
CONFIGURATION AND FINISH OF ACCESS HOLES	O	–	O	–
FILL–UP FILLET WELDS • DIMENSIONS (ALIGN, GAPS AT ROOT) • CLEANLINESS (CONDITION OF STEEL SURFACES) • TACKING (TACK WELD QUALITY AND LOCATION)	P/O**	–	O	–

**FOLLOWING PERFORMANCE OF THIS INSPECTION TASK FOR TEN WELDS TO BE MADE BY A GIVEN WELDER, THE WELDER DEMONSTRATING UNDERSTANDING OF REQUIREMENTS AND POSSESSION OF SKILLS AND TOOLS TO VERIFY THESE ITEMS, THE PERFORM DESIGNATION OF THIS TASK SHALL BE REDUCED TO OBSERVE, AND THE WELDER SHALL BE RETURNED TO PERFORM UNTIL SUCH TIME AS THE INSPECTOR HAS RE=ESTABLISHED ADEQUATE ASSURANCE THAT THE WELDER WILL PERFORM THE INSPECTION TASKS LISTED.

TABLE J6.2
VISUAL INSPECTION TASKS DURING WELDING

VISUAL INSPECTION TASKS DURING WELDING	QC		QA	
	TASK	DOC.	TASK	DOC.
WPS FOLLOWED • SETTINGS ON WELDING EQUIPMENT • TRAVEL SPEED • SELECTED WELDING MATERIALS • SHIELDING GAS TYPE/FLOW RATE –PREHEAT APPLIED • INTERPASS TEMPERATURE MAINTAINED (MIN/MAX.) • PROPER POSITION (F,V,H,OH) –INTERMIX OF FILLER METALS AVOIDED APPROVED	O	–	O	–
USE OF QUALIFIED WELDERS	O	–	O	–
CONTROL AND HANDLING OF WELDING CONSUMABLES • PACKAGING • EXPOSURE CONTROL	O	–	O	–
ENVIRONMENTAL CONDITIONS • WIND SPEED WITHIN LIMITS • PRECIPITATION AND TEMPERATURE	O	–	O	–
WELDING TECHNIQUES • INTERPASS AND FINAL CLEANING • EACH PASS WITHIN PROFILE LIMITATIONS • EACH PASS MEETS QUALITY REQUIREMENTS	O	–	O	–
NO WELDING OVER CRACKS TACKS	O	–	O	–

TABLE J6.3
VISUAL INSPECTION TASKS AFTER WELDING

VISUAL INSPECTION TASKS AFTER WELDING	QC		QA	
	TASK	DOC.	TASK	DOC.
WELDS CLEANED	O	–	O	–
SIZE, LENGTH, AND LOCATION OF WELDS	P	–	P	–
WELDS MEET VISUAL ACCEPTANCE CRITERIA –CRACK PROHIBITION –WELD/BASE–METAL FUSION –CRATER CROSS SECTION –WELDS PROFILES AND SIZE –UNDERCUT –POROSITY	P	D	P	D
K–AREA[1]	P	D	P	D
PLACEMENT OF REINFORCING OR CONTOURING FILLET WELDS (IF REQUIRED)	P	D	P	D
BACKING REMOVED, WELD TABS REMOVED AND FINISHED, AND FILLET WELDS ADDED (IF REQUIRED)	P	D	P	D
REPAIR ACTIVITIES	P	–	P	D

[1] WHEN WELDING OF DOUBLER PLATES, CONTINUITY PLATES OR SIFFENERS HAS PERFORMED IN THE K–AREA, VISUALLY INSPECTED WEB K–AREA FOR CRACKS WITHIN 3IN.(75MM) OF THE WELD. THE VISUAL INSPECTION SHALL BE PERFORMED NO SOONER THAN 48 HOURS FOLLOWING COMPLETION OF THE WELDING.

SPECIAL INSPECTION:

PER IBC CHAPTER 17, SPECIAL INSPECTION IS REQUIRED FOR THE FOLLOWING ITEMS:

CONCRETE: VERIFICATION AND INSPECTION	CONTINUOUS	PERIODIC	REFERRENCED STANDARD (NOTE 1)	IBC REFERENCE
1. Inspect reinforcement, including prestressing tendons, and verify placement.	–	X	ACI 318: Ch. 20, 25.2 25.3, 26.6.1–26.6.3	1908.4
2. Reinforcing bar welding: a. Verify weldability of reinforcing bars other than ASTM A706; b. Inspect single–pass fillet welds, maximum 5/16; and c. Inspect all other welds.	– X	X X	AWS D1.4 ACI 318: 26.6.4	---
3. Inspect anchors cast in concrete.	–	–	ACI 318: 17.8.2	---
4. Inspect anchors post–installed in hardened concrete members. a. Adhesive anchors installed in horizontally or upwardly inclined orientations to resist sustained tension loads. b. Mechanical anchors and adhesive anchors not defined in 4.a.	X	 X	ACI 318: 17.8.2.4 ACI 318: 17.8.2	---
5. Verifying use of required design mix.	–	X	ACI318: Ch. 19, 26.4.3, 26.4.4	1904.1, 1904.2 1908.2, 1908.3
6. Prior to concrete placement, fabricate specimens for strength tests, perform slump and air content tests, and determine the temperature of the concrete.	X	–	ASTM C172 ASTM C31 ACI 318: 26.4, 26.12	1908.10
7. Inspect concrete and shotcrete placement for proper application techniques.	X	–	ACI 318: 26.5	1908.6, 1908.7, 1908.8
8. Verify maintenance of specified curing temperature and techniques.	–	X	ACI 318: 26.5.3–26.5.5	1908.9
9. Inspect prestressed concrete for: a. Application of prestressing forces; and b. Grouting of bonded prestressing tendons	X X	– –	ACI 318: 26.10	--- ---
10. Inspect erection of precast concrete members.	–	X	ACI 318: Ch. 26.9	---
11. Verification of in–situ concrete strength, prior to stressing of tendons in post–tensioned concrete and prior to removal of shores and forms from beams and structural slab.	–	X	ACI 318: 26.11.2	---
12. Inspect formwork for shape, location and dimensions of the concrete member being formed.	–	X	ACI 318: 26.11.1.2(b)	---

NOTES:
1. WHERE APPLICABLE, SEE ALSO SECTION 1705.12, SPECIAL INSPECTIONS FOR SEISMIC RESISTANCE.
2. SPECIFIC REQUIREMENTS FOR SPECIAL INSPECTIONS SHALL BE INCLUDED IN THE RESEARCH REPORT FOR THE ANCHR ISSUED BY AN APPROVED SOURCE IN ACCORDANCE WITH 17.8.2 IN ACI318, OR OTHER QUALIFICATION PROCEDURES. WHERE SPECIFIC REQUIREMENTS ARE NOT PROVIDED, SPECIAL INSPECTION REQUIREMENTS SHALL BE SPECIFIED BY THE REGISTERED DESIGN PROFESSIONAL AND SHALL BE APPROVED BY THE BUILDING OFFICIAL PRIOR TO THE COMMENCEMENT OF WORK.

MASONRY LEVEL 2 INSPECTION TASK	CONTINUOUS DURING TASK LISTED	PERIODICALLY DURING TASK LISTED	ACI 530/ASCE 5/TMS 402 (NOTE 1)	ACI 530.1/ASCE 6/TMS 602 (NOTE 1)	IBC REFERENCE
1. As masonry construction begins, the following shall be verified to ensure compliance: a. Proportions of site–prepared mortar. b. Constructin of mortar joints. c. Location of reinforcement, connectors,	 – –	 X X		ART. 2.6A ART. 3.3B ART. 3.4,3.6A	
2. The inspection program shall verify: a. Size and location of structural elements. b. Type, size and location of anchors including other details of anchorage of masonry to structural members, frames or other construction. c. Specified size, grade and type of reinforcement. d. Welding of reinforcing bars. e. Protection of masonry during cold weather	 – – – X –	 X X X – X	 SEC.1.2.2(e), 2.1.4,3.1.6 SEC. 1.13 SEC. 2.1.10.7.2, 3.3.3.4(b)	ART. 3.3G ART. 2.4,3.4 ART. 1.8C, ART. 1.8D	 2104.4 SEC. 2104.3,
3. Prior to grouting, the following shall be verified to ensure compliance: a. Grout space is clean. b. Placement of reinforcement and connectors c. Proportions of site–prepared grout and d. Construction of mortar joints.	 – –	 X X	SEC. 1.13	ART. 3.2D ART. 3.4 ART. 2.6B	
4. Grout placement shall be verified to ensure compliance with code and construction document provisions. a. Grouting of prestressing bonded tendons.	X	– –		ART. 3.5	
5. Preparation of any required grout specimens, Mortar specimens &/or prisms shall be observed.	X	–	SEC. 2105.2.2, 2105.3	ART. 1.4	
6. Compliance with required inspection provisions of the construction documents and the approved submittal shall be verified.	–	X		ART. 1.5	

NOTES:
1. THE SPECIFIC STANDARDS ARE THOSE LISTED IN CHAPTER 35
2. TABLES TAKEN DIRECTLY FROM IBC FOR REFERENCE.

STEEL: VERIFICATION AND INSPECTION	CONTINUOUS	PERIODIC	REFERENCED STANDARD (NOTE1)	IBC REFERENCE
1. Material verification of high–strength bolts, nuts and washers: a. Identification markings to conform to ASTM standards specified in the approved construction documents. b. Manufacturer's certificate of compliance required.	– –	X X	APPLICABLE ASTM MATERIAL SPECS AISC 360, SEC. A3.3	
2. Inspection of high–strength bolting: a. Bearing–type connections. AISC 360, Section M2.5 1704.3.3	–	X		
3. Material verification of structural steel: a. Identification markings to conform to ASTM standards specified in the approved construction documents. b. Manufacturer's certified mill test reports.	 –	 –	AISC 360, SEC. M2.5 ASTM A 6 OR ASTM A 568	
4. Material verification of weld filler materials: a. Identification markings to conform to ASTM standards specified in the approved construction documents. b. Manufacturer's certificate of compliance required.	– –	– –	AISC 360, SEC. A3.5	
5. Inspection of welding: a. Structural steel: 1) Complete and partial penetration groove welds. 2) Multipass fillet welds. 3) Single–pass fillet welds > 5/16" 4) Single–pass fillet welds = 5/16" 5) Floor and roof deck welds. b. Reinforcing steel: 1) Verification of weld ability of reinforcing steel other than ASTM A706. 2) Reinforcing steel–resisting flexural and axial forces in intermediate and special moment frames, and boundary elements of special reinforced concrete shear walls and shear reinforcement. 4) Other reinforcing steel.	– X X X – – – – X X –	– – – – X X – X – – X	 AWS D1.1 AWS D1.1 AWS D1.1 AWS D1.1 AWS D1.3 AWS D1.4 ACI 318: 3.5.2	
6. Inspection of steel frame joint details for compliance with approved construction documents: a. Details such as bracing and stiffening. b. Member locations. c. Application of joint details at each connection.	– – – –	X – – –		

NOTES:
1. WHERE APPLICABLE SEE ALSO SECTION 1701.1, SPECIAL INSPECTION FOR SEISMIC RESISTANCE.
2. TABLES TAKEN DIRECTLY FROM IBC FOR REFERENCE.

STEEL: CONSTRUCTION OTHER THAN STRUCTURAL STEEL: VERIFICATION AND INSPECTION	CONTINUOUS	PERIODIC	REFERENCED STANDARD (NOTE1)
1. Material verification of cold–formed steel deck: a. Identification markings to conform to ASTM standards specified in the approved construction documents. b. Manufacturer's certified test reports	– –	X X	APPLICABLE ASTM MATERIAL STANDARDS
2. Inspection of welding: a. Cold formed steel deck: 1) Floor and roof deck welds. b. Reinforcing steel: 1) Verification of weldability of reinforcing steel other than ASTM A706. 2) Reinforcing steel resisting flexural and axial forces in intermediate and special moment frames, and boundary elements of special structural walls of concrete and shear reinforcement. 3) Shear reinforcement. 4) Other reinforcing steel.	 – – X – X	 X X – X –	 AWS D1.3 ACI 318: 3.5.2 AWS D1.4
SOILS: 1. Verify materials below shallow foundations are adequate to achieve the design bearing apacity. 2. Verify excavations are extended to proper depth and have reached proper material. 3. Perform classification and testing of compacted fill materials. 4. Verify use of proper materials, densities and lift thicknesses during placement and compaction of compacted fill. 5. Prior to placement of compacted fill, inspect subgrade and verify that site has been properly prepared. Not the responsibility of the structural engineer. Special inspection certificate to be completed by geotechnical engineer.	– – – X –	X X X – X	
EXPANSION, SCREW, AND EPOXY BOLTS: 1. During placemet of all expansion, screw, & epoxy bolts, for visual verification of hole diameter and depth and placement of bolt and/or epoxy.	–	X	

DUTIES AND RESPONSIBILITIES OF THE SPECIAL INSPECTOR:

A) THE SPECIAL INSPECTOR SHALL OBSERVE THE WORK ASSIGNED TO BE CERTAIN IT CONFORMS WITH THE APPROVED DESIGN DRAWINGS AND SPECIFICATION.

B) THE SPECIAL INSPECTOR SHALL FURNISH INSPECTION REPORTS TO THE BUILDING OFFICIAL, AND TO THE ENGINEER.

C) UPON COMPLETION OF THE ASSIGNED WORK THE ENGINEER OR ARCHITECT SHALL COMPLETE AND SIGN THE APPROPRIATE FORMS CERTIFYING THAT TO THE BEST OF HIS KNOWLEDGE THE WORK IS IN CONFORMANCE WITH THE APPROVED PLANS AND SPECIFICATIONS AND THE APPLICABLE WORKMANSHIP PROVISIONS OF THE CODE.

Butler Design Group Inc.
architects & planners
5013 East Washington St. #100
Phoenix, Arizona 85034
Phone 602-957-1800

PROFESSIONAL STRUCTURAL ENGINEER
No. 14160325
ROBERT HALLIDAY
STATE OF UTAH
REVISED

OWNERSHIP OF INSTRUMENTS OF SERVICE
REPORTS, DRAWS, SPECIFICATIONS, COMPUTER FILES, FIELD DATA, notes and other documents and instruments prepared by the design professional as instruments of service shall remain the property of the design professional. The design professional shall retain all common law, statutory and other reserved rights, including the copyright thereto.

PROPERTY RESERVE

PK Associates, L.L.C.
6900 E. Belleview Ave. #200
Greenwood Village, CO 80111
Phone: (720) 799-1058
Email: cadd@pkastructural.com
Website: www.pkastructural.com
Proj: 24295A

700 SOUTH
752 SOUTH 6200 WEST
SALT LAKE CITY, UTAH

Current Submittal: 100% CD SUBMITTAL
01/09/26

Revisions:

Project No.:	24295A
Issue Date:	02/25/2026
Drawn By:	PKA
Project Manager:	RH

Title: GENERAL STRUCTURAL NOTES

S003

GENERAL STRUCTURAL NOTES

APPLY UNLESS NOTED OTHERWISE

TABLE J7.1
INSPECTION TASKS PRIOR TO BOLTING

INSPECTION TASKS PRIOR TO BOLTING	QC		QA	
	TASK	DOC.	TASK	DOC.
PROPER FASTENERS SELECTED FOR THE JOINT DETAIL	0	–	0	–
PROPER BOLTING PROCEDURE SELECTED FOR JOINT DETAIL	0	–	0	–
CONNECTING ELEMENTS, INCLUDING THE FAYING SURFACE CONDITION AND HOLE PREPARATION, IF SPECIFIED, MEET APPLICABLE REQUIREMENTS	0	–	0	–
PRE-INSTALLATION VERIFICATION TESTING BY INSTALLATION PERSONNEL OBSERVED FOR FASTENER ASSEMBLIES AND METHODS USED	P	D	0	D
PROPER STORAGE PROVIDED FOR BOLTS, NUTS, WASHERS AND OTHER FASTENER COMPONENTS	0	–	0	–

TABLE J7.2
INSPECTION TASKS DURING BOLTING

INSPECTION TASKS DURING BOLTING	QC		QA	
	TASK	DOC.	TASK	DOC.
FASTENER ASSEMBLIES PLACED IN ALL HOLES AND WASHERS (IF REQUIRED) ARE POSITIONED AS REQUIRED	0	–	0	–
JOINT BROUGHT TO THE SNUG TIGHT CONDITION PRIOR TO THE PRETENSIONING OPERATION	0	–	0	–
FASTENER COMPONENT NOT TURNED BY THE WRENCH PREVENTED FROM ROTATING	0	–	0	–
BOLTS ARE PRETENSIONED PROGRESSING SYSTEMATICALLY FROM THE MOST RIGID POINT TOWARD THE FREE EDGES	0	–	0	–

TABLE J7.3
INSPECTION TASKS AFTER BOLTING

INSPECTION TASKS AFTER BOLTING	QC		QA	
	TASK	DOC.	TASK	DOC.
DOCUMENT ACCEPTED AND REJECTED CONNECTIONS	P	D	P	D

TABLE J8.1
OTHER INSPECTION TASKS

OTHER INSPECTION TASKS	QC		QA	
	TASK	DOC.	TASK	DOC.
RBS REQUIREMENTS, IF APPLICABLE –CONTOUR AND FINISH –DIMENSIONAL TOLERANCES	P	D	P	D
PROTECTED ZONE– NO HOLES AND UNAPPROVED ATTACHMENTS MADE BY FABRICATOR OR ERECTOR, AS APPLICABLE	P	D	P	D

TABLE 1.1 INSPECTION OR EXECUTION TASKS PRIOR TO DECK PLACEMENT

	TASK	QC	QA
A	VERIFY COMPLIANCE OF MATERIALS (DECK AND ALL DECK ACCESSORIES) WITH CONSTRUCTION DOCUMENTS, INCLUDING PROFILES, MATERIAL PROPERTIES, AND BASE METAL THICKNESS	PERFORM	PERFORM
B	DOCUMENT ACCEPTANCE OR REJECTION OF DECK AND DECK ACCESSORIES	PERFORM	PERFORM

TABLE 1.2 INSPECTION OR EXECUTION TASKS AFTER TO DECK PLACEMENT

	TASK	QC	QA
A	VERIFY COMPLIANCE OF DECK AND ALL DECK ACCESSORIES INSTALLATION WITH CONSTRUCTION DOCUMENTS	PERFORM	PERFORM
B	VERIFY DECK MATERIALS ARE REPRESENTED BY MILL CERTIFICATIONS THAT COMPLY WITH CONSTRUCTION DOCUMENTS	N/A	PERFORM
C	DOCUMENT ACCEPTANCE OR REJECTION OF INSTALLATION OF DECK AND DECK ACCESSORIES	PERFORM	PERFORM

TABLE 1.3 INSPECTION OR EXECUTION TASKS PRIOR TO WELDING

	TASK	QC	QA
A	WELDING PROCEDURE SPECIFICATIONS (WPS) AVAILABLE	OBSERVE	OBSERVE
B	MANUFACTURER CERTIFICATIONS FOR WELDING CONSUMABLES AVAILABLE	OBSERVE	OBSERVE
C	MATERIAL IDENTIFICATION (TYPE/GRADE)	OBSERVE	OBSERVE
D	CHECK WELDING EQUIPMENT	OBSERVE	OBSERVE

TABLE 1.4 INSPECTION OR EXECUTION TASKS PRIOR TO WELDING

	TASK	QC	QA
A	USE OF QUALIFIED WELDERS	OBSERVE	OBSERVE
B	CONTROL AND HANDLING OF WELDING CONSUMABLES	OBSERVE	OBSERVE
C	ENVIRONMENTAL CONDITIONS (WIND SPEED, MOISTURE, TEMPERATURE)	OBSERVE	OBSERVE
D	WPS FOLLOWED	OBSERVE	OBSERVE

TABLE 1.5 INSPECTION OR EXECUTION TASKS AFTER WELDING

	TASK	QC	QA
A	VERIFY SIZE AND LOCATION OF WELDS, INCLUDING SUPPORT, SIDELAP, AND PERIMETER WELDS	PERFORM	PERFORM
B	WELDS MEET VISUAL ACCEPTANCE CRITERIA	PERFORM	PERFORM
C	VERIFY REPAIR ACTIVITIES	PERFORM	PERFORM
D	DOCUMENT ACCEPTANCE OR REJECTION OF WELDS	PERFORM	PERFORM

TABLE 1.6 INSPECTION OR EXECUTION TASKS PRIOR TO MECHANICAL FASTENING

	TASK	QC	QA
A	MANUFACTURER INSTALLATION INSTRUCTIONS AVAILABLE FOR MECHANICAL FASTENERS	OBSERVE	OBSERVE
B	PROPER TOOLS AVAILABLE FOR FASTENER INSTALLATION	OBSERVE	OBSERVE
C	PROPER STORAGE FOR MECHANICAL FASTENERS	OBSERVE	OBSERVE

TABLE 1.7 INSPECTION OR EXECUTION TASKS DURING MECHANICAL FASTENING

	TASK	QC	QA
A	FASTENERS ARE POSITIONED AS REQUIRED	OBSERVE	OBSERVE
B	FASTENERS ARE INSTALLED IN ACCORDANCE WITH MANUFACTURER'S INSTRUCTIONS	OBSERVE	OBSERVE

TABLE 1.8 INSPECTION OR EXECUTION TASKS AFTER MECHANICAL FASTENING

	TASK	QC	QA
A	CHECK SPACING, TYPE, AND INSTALLATION OF SUPPORT FASTENERS	OBSERVE	OBSERVE
B	CHECK SPACING, TYPE AND INSTALLATION OF SIDELAP FASTENERS	OBSERVE	OBSERVE
C	CHECK SPACING, TYPE AND INSTALLATION OF PERIMETER FASTENERS	OBSERVE	OBSERVE
D	VERIFY REPAIR ACTIVITIES	OBSERVE	OBSERVE
E	DOCUMENT ACCEPTANCE OR REJECTION OF MECHANICAL FASTENERS	OBSERVE	OBSERVE

Butler Design Group Inc.
architects & planners
5013 East Washington St. #100
Phoenix, Arizona 85034
Phone 602-957-1800

PROFESSIONAL STRUCTURAL ENGINEER
No. 14160325
ROBERT HALLIDAY
STATE OF UTAH
EXPIRES

OWNERSHIP OF INSTRUMENTS OF SERVICE
REPORTS, DRAWINGS, SPECIFICATIONS, COMPUTER FILES, FIELD data, notes and other documents and instruments prepared by the design professional as instruments of service shall remain the property of the design professional. The design professional shall retain all common law, statutory and other reserved rights, including the copyright thereto.

PROPERTY RESERVE

PK Associates, L.L.C.
6900 E. Belleview Ave. #200
Greenwood Village, CO 80111
Phone: (720) 799-1058
Email: cadd@pkastructural.com
Website: www.pkastructural.com
Proj. 24295A

700 SOUTH
752 SOUTH 6200 WEST
SALT LAKE CITY, UTAH

Current Submittal: 100% CD SUBMITTAL
01/09/26

Revisions:

Project No.: 24295A
Issue Date: 02/25/2026
Drawn By: PKA
Project Manager: RH
Title: GENERAL STRUCTURAL NOTES

S004

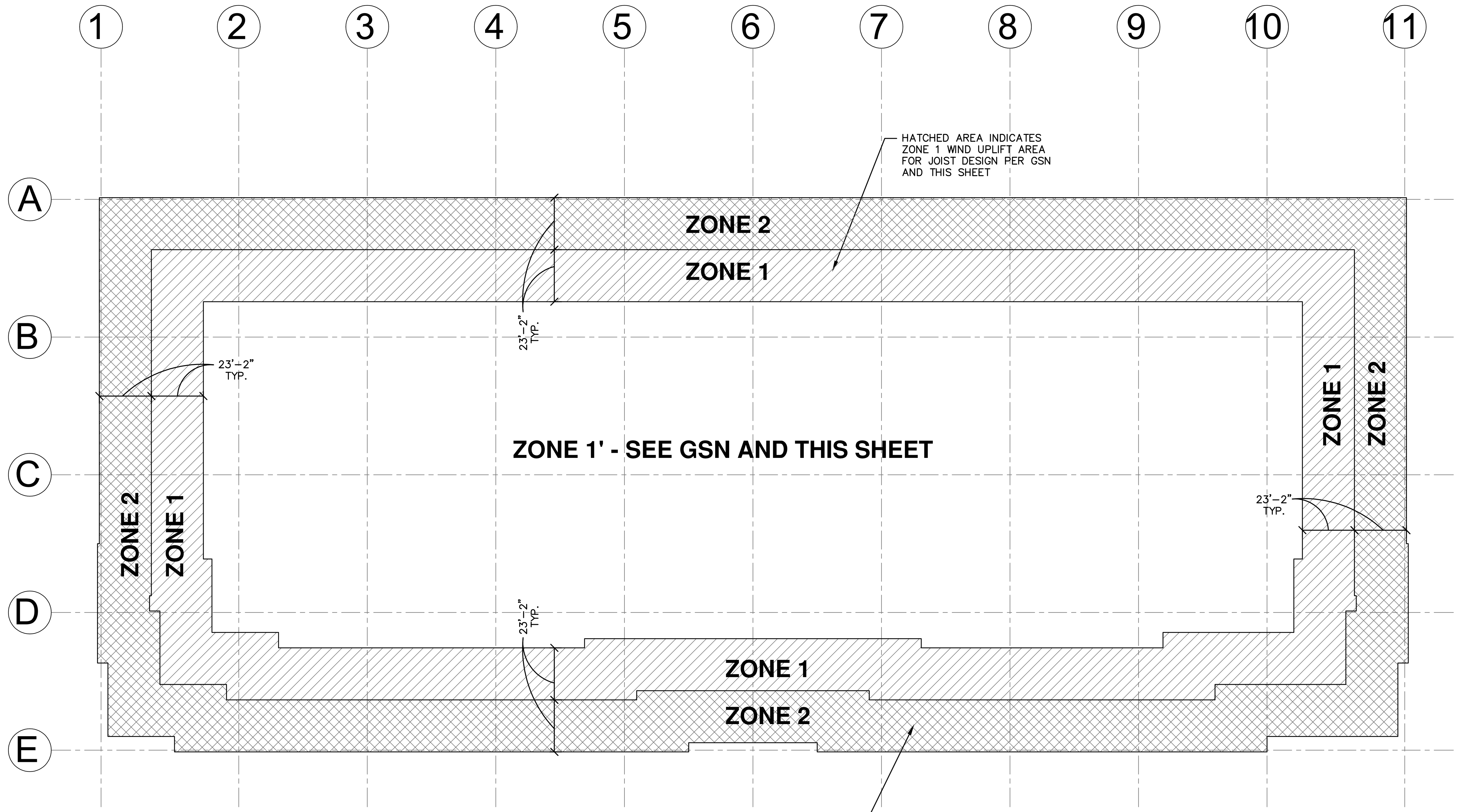

BUILDING 1 - WIND UPLIFT AND DOWNWARD PRESSURE LOAD KEY PLANS

SCALE: NO SCALE

VELOCITY PRESSURE, qz = 24.8 PSF AT h = 38'-6" FT. (MEAN ROOF HEIGHT). DESIGN WIND PRESSURES COMPONENTS AND CLADDING:

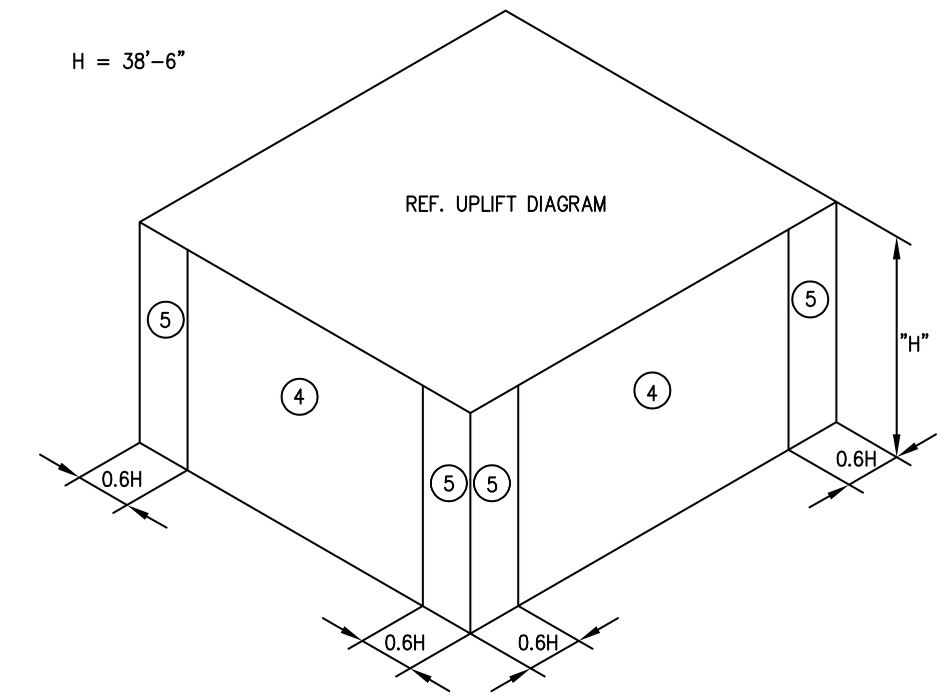

*PRESSURES SHOWN ARE ULTIMATE. MULTIPLY BY 0.6 FOR SERVICE LEVEL PRESSURES.

LOCATION	ZONE	EFFECTIVE WIND AREA (SF)	DESIGN WIND PRESSURE (PSF)	
			POSITIVE	NEGATIVE
ROOF	1'	10	16.0	−26.8
		20	16.0	−26.8
		50	16.0	−26.8
		100	16.0	−26.8
	1	10	16.0	−46.7
		20	16.0	−43.6
		50	16.0	−39.5
		100	16.0	−36.5
	2	10	26.8	−61.6
		20	25.6	−57.6
		50	24.1	−52.4
		100	22.9	−48.4
	3	10	26.8	−61.6
		20	25.6	−57.6
		50	24.1	−52.4
		100	22.9	−48.4
WALLS	4	10	26.8	−29.1
		20	25.6	−27.9
		50	24.1	−26.3
		100	22.9	−25.1
		500	20.1	−22.4
	5	10	26.8	−35.8
		20	25.6	−33.4
		50	24.1	−30.2
		100	22.9	−27.9
		500	20.1	−22.4
LOCATION	ZONE	EFFECTIVE AREA	CASE A	CASE B
PARAPET	2	10	81.7	−48.3
		50	69.4	−42.6
		100	64.1	−40.2
	3	10	81.7	−55.2
		50	69.4	−46.7
		100	64.1	−43.0

ZONE 1': INTERIOR AREA OF ROOF AWAY FROM BUILDING EXTERIOR WALLS.
ZONE 1: INTERIOR AREA OF ROOF AWAY FROM BUILDING EXTERIOR WALLS.
ZONE 2: ROOF AREAS ALONG EXTERIOR WALLS.
ZONE 3: ROOF AREAS AT BUILDING CORNERS.
ZONE 4: EXTERIOR WALLS AWAY FROM BUILDING CORNERS.
ZONE 5: EXTERIOR WALLS AT BUILDING CORNERS.
–DESIGN WIND PRESSURES – PLUS AND MINUS SIGNS SIGNIFY PRESSURE ACTING TOWARD AND AWAY FROM EXTERIOR SURFACE.
–LINEAR INTERPOLATION BETWEEN VALUES OF TRIBUTARY AREA IS PERMISSIBLE.

WINDWARD PARAPET CASE A *LEEWARD PARAPET CASE B*

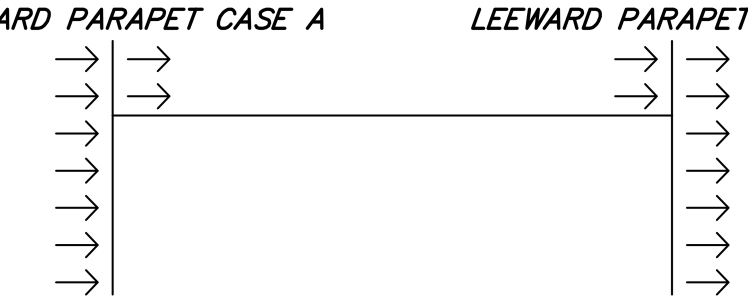

ROOFTOP EQUIPMENT WIND LOADS	
HORIZONTAL	VERTICAL
47.2 PSF	37.3 PSF

MWFRS PARAPET PRESSURES H<60	
LOCATION	DESIGN WIND PRESSURE (PSF)
WINDWARD PARAPET CASE A	38.3
LEEWARD PARAPET CASE B	−25.5

MWFRS WALL PRESSURES ALL H(COMBINED WINDWARD AND LEEWARD)	
ELEVATION	DESIGN WIND PRESSURE (PSF)
0'-0" – 15'-0"	24.1
20'-0"	24.9
25'-0"	25.6
30'-0"	26.2
38'-6"	27.0

Butler Design Group Inc.
architects & planners
5013 East Washington St. #100
Phoenix, Arizona 85034
Phone 602-957-1800

PROFESSIONAL STRUCTURAL ENGINEER
No. 14160325
ROBERT HALLIDAY
STATE OF UTAH
2/25/26

OWNERSHIP OF INSTRUMENTS OF SERVICE
All reports, plans, specifications, computer files, field data, notes and other documents and instruments prepared by the design professional as instruments of service shall remain the property of the design professional. The design professional shall retain all common law, statutory and other reserved rights, including the copyright thereto.

PROPERTY RESERVE

PK Associates, L.L.C.
6900 E. Belleview Ave. #200
Greenwood Village, CO 80111
Phone: (720) 799-1058
Email: cadd@pkastructural.com
Website: www.pkastructural.com
Proj: 24295A

700 SOUTH
752 SOUTH 6200 WEST
SALT LAKE CITY, UTAH

Current Submittal: 100% CD SUBMITTAL
01/09/26

Revisions:

Project No.:	24295A
Issue Date:	02/25/2026
Drawn By:	PKA
Project Manager:	RH
Title:	WIND PRESSURES COMPONENTS AND CLADDING

S005

FRAMING SCHEDULES

LEDGER (L) SCHEDULE

STEEL:
1. ALL LEDGERS SHALL HAVE MINIMUM OF 2 WELD PLATES OR ANCHOR BOLTS AS NOTED BELOW.
2. WELD PLATES OR ANCHOR BOLTS SHALL BE LOCATED NOT LESS THAN 6" NOR MORE THAN 1'–4" FROM END OF LEDGER OR LEDGER SPLICE.
3. ALL LEDGERS TO BE Fy = 50ksi STEEL.

MARK	SIZE / TYPE	CONNECTION
L1	5x5x3/8" STEEL ANGLE	SEE DETAIL 304
L2	4x4x3/8" STEEL ANGLE	SEE DETAIL 305

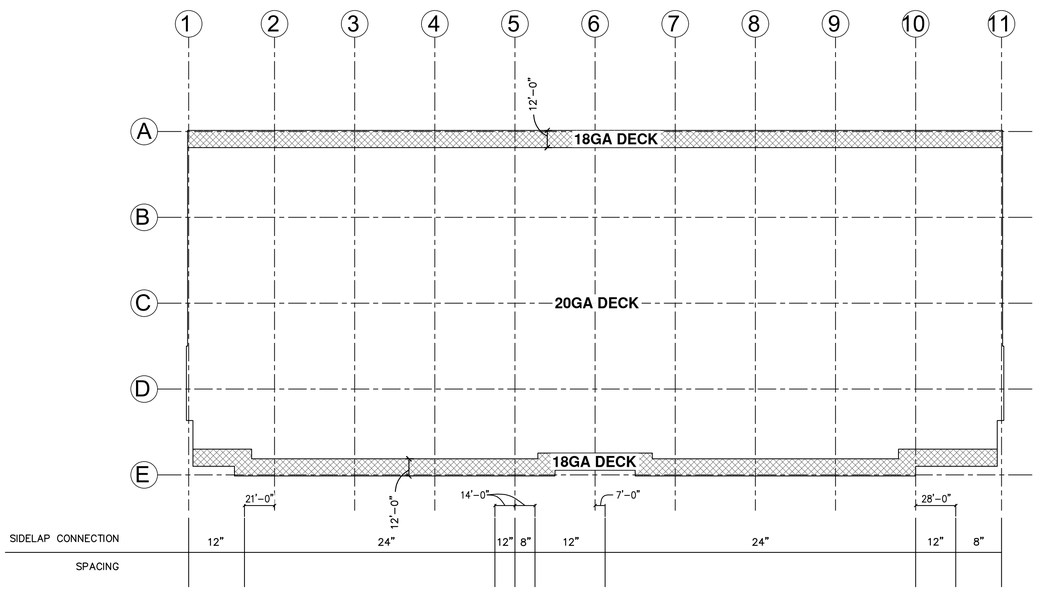

BUILDING 1 DECK PLAN

		TYPE	SPACING
DECK CONNECTION:	END CONNECTION	5/8"ø WELD	(7)/36"
	INTERIOR CONNECTION	5/8"ø WELD	(7)/36"
	SIDELAP CONNECTION	VSC2	SEE PLAN

FOUNDATION SCHEDULES

CONTINUOUS FOOTING (WF) SCHEDULE

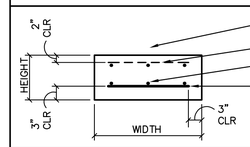

MARK	DIMENSIONS		FOOTING REINFORCING	REMARKS
	HEIGHT	WIDTH		
WF1	24"	5'–6"	12– #6 CONT. AND #5 AT 6" TRANSVERSE TOP AND BOTTOM	---
WF2	24"	3'–6"	7– #5 CONT. AND #5 AT 6" TRANSVERSE TOP AND BOTTOM	---
WF3	24"	7'–6"	14– #5 CONT. AND #5 AT 6" TRANSVERSE TOP AND BOTTOM	---

STEEL COLUMN (SC) SCHEDULE

NOTE: FOR ANCHOR BOLT PATTERN, SEE TYPICAL DETAIL 11/S401.

MARK	SIZE	BASE CONNECTION	REMARKS
SC1	HSS10x10x1/2"	3/4"x16"x16" STEEL PLATE W/ 4–3/4"ø F1554 GR. 36 THREADED RODS	---
SC2	W10x30	3/4"x16"x16" STEEL PLATE W/ 4–3/4"ø F1554 GR36 THREADED RODS	---
SC3	W36x529	REF DETAIL 123	---
SC4	W36x723	REF DETAIL 123	---

ISOLATED FOOTING (F) SCHEDULE

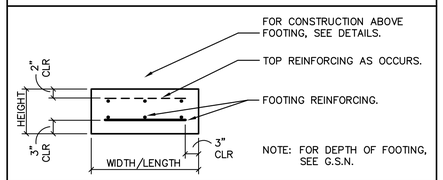

MARK	DIMENSIONS			FOOTING REINFORCING		REMARKS
	HEIGHT	WIDTH	LENGTH	LONGITUDINAL	TRANSVERSE	
F1	18"	9'–0"	9'–0"	12– #5 BOTTOM	12–#5 BOTTOM	2'–6" STRUCTURAL FILL
F2	16"	9'–0"	9'–0"	11– #5 BOTTOM	11– #5 BOTTOM	3'–6" STRUCTURAL FILL
F3	16"	7'–0"	7'–0"	8– #5 BOTTOM	8– #5 BOTTOM	2'–6" STRUCTURAL FILL
F4	48"	13'–0"	13'–0"	#7 AT 6" O.C. TOP AND BOTTOM	#7 AT 6" O.C. TOP AND BOTTOM	3'–6" STRUCTURAL FILL
F5	48"	15'–0"	15'–0"	#7 AT 6" O.C. TOP AND BOTTOM	#7 AT 6" O.C. TOP AND BOTTOM	3'–6" STRUCTURAL FILL
F6	48"	8'–0"	38'–0"	19– #7 TOP AND BOTTOM	#7 AT 6" O.C. TOP AND BOTTOM	3'–6" STRUCTURAL FILL

GRADE BEAM (GB) SCHEDULE

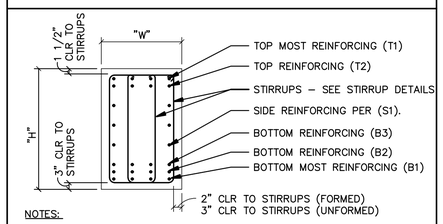

NOTES:
1. WHERE SPLICES ARE REQUIRED, LAP BOTTOM REINFORCING AT SUPPORTS AND TOP REINFORCING AT MIDSPAN.
2. WHEN DIFFERENT AREAS OF TOP REINFORCING OCCUR AT ADJACENT GRADE BEAMS, EXTEND LARGER AREA OF STEEL OVER SUPPORTS AND LAP AT MIDSPAN.
3. COLD JOINTS SHALL BE MADE NEAR MIDSPAN OF THE GRADE BEAMS WITH THE LONGITUDINAL REINFOCING CONTINUOUS THROUGH JOINT. SE THREE HORIZONTAL KEYS EQUALLY SPACED AT JOINT.
4. FOR STIRRUP PROFILES, SEE BELOW.

STIRRUP PROFILES

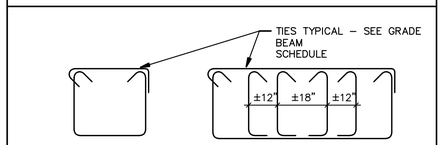

MARK	DIMENSIONS		REINFORCING				STIRRUPS	SIDE REINF.
	"W"	"H"	TOP		BOTTOM			
			T1	T2	B1	B2		
GB1	36"	48"	9– #7	9– #7	9– #7	9– #7	#3 AT 12" O.C. (2 LEGS)	4– #5 EACH SIDE

Butler Design Group Inc.
architects & planners
5013 East Washington St. #100
Phoenix, Arizona 85034
Phone 602-957-1800

PROFESSIONAL STRUCTURAL ENGINEER No. 14160325 ROBERT HALLIDAY STATE OF UTAH

OWNERSHIP OF INSTRUMENTS OF SERVICE
REPORTS, DRAWINGS, SPECIFICATIONS, COMPUTER FILES, field data, notes and other documents and instruments prepared by the design professional as instruments of service shall remain the property of the design professional. The design professional shall retain all common law, statutory and other reserved rights, including the copyright thereto.

PROPERTY RESERVE

PK Associates, L.L.C.
6900 E. Belleview Ave. #200
Greenwood Village, CO 80111
Phone: (720) 799-1058
Email: cadd@pkastructural.com
Website: www.pkastructural.com
Proj: 24295A

700 SOUTH
752 SOUTH 6200 WEST
SALT LAKE CITY, UTAH

Current Submittal: 100% CD SUBMITTAL
01/09/26

Revisions:

Project No.: 24295A
Issue Date: 02/25/2026
Drawn By: PKA
Project Manager: RH
Title: SCHEDULES

S006

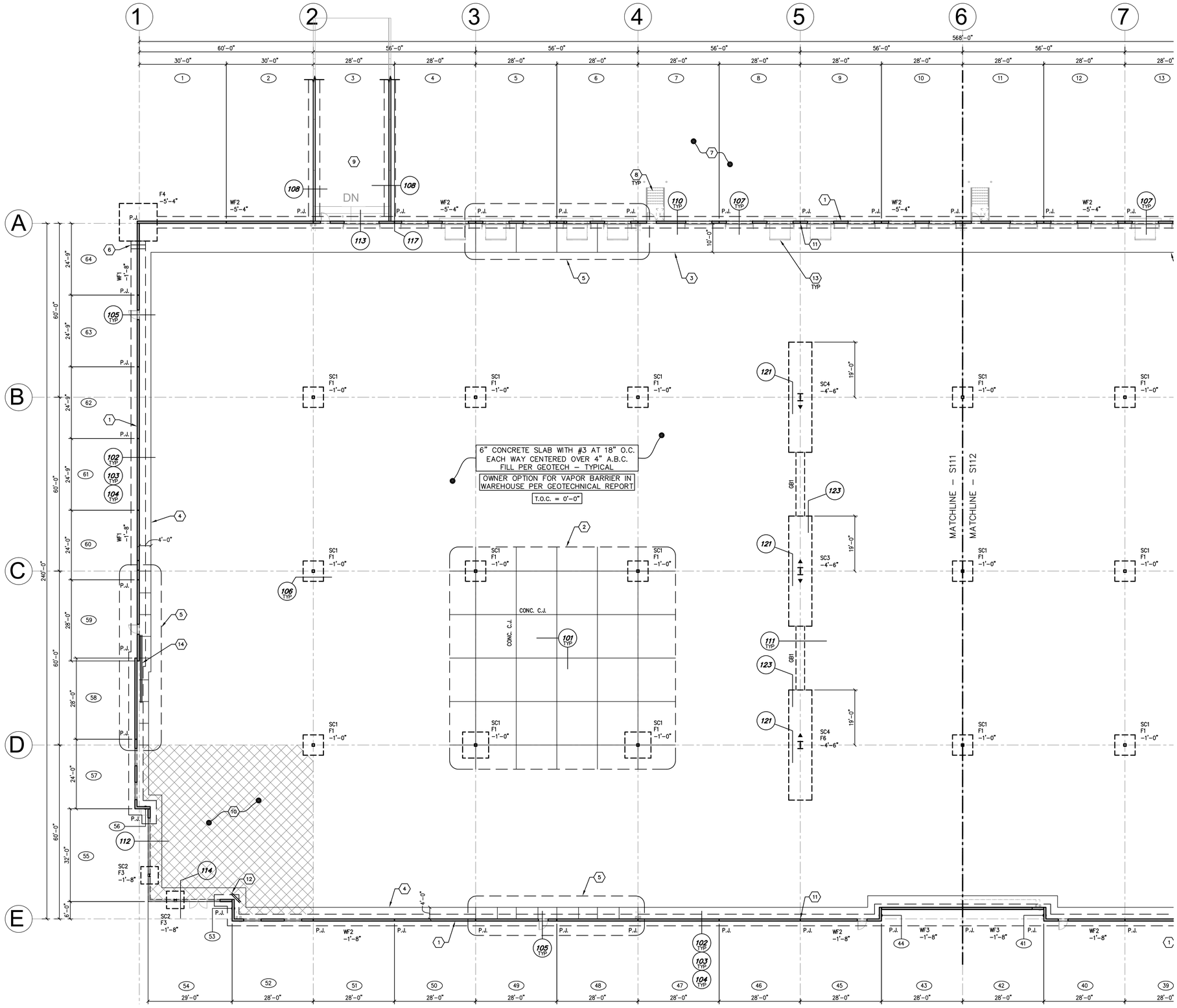

1 **PARTIAL FOUNDATION PLAN - BUILDING 1**
SCALE: 1/16" = 1'-0"

FOUNDATION NOTES:

1. FOR SHEET INDEX SEE GENERAL STRUCTURAL NOTES.
2. ELEVATIONS SHOWN ON PLANS ARE BASED ON DATUM ELEVATIONS SPECIFIC TO THE PROJECT. SEE ARCHITECTURAL AND CIVIL DRAWINGS FOR ACTUAL U.S.G. ELEVATIONS AND BENCHMARK LOCATION.
3. VERIFY ALL DIMENSIONS WITH ARCHITECTURAL DRAWINGS. DO NOT USE "CONC C.J." AS DIMENSION LINE OR TO LOCATE BUILDING ELEMENTS.
4. SCHEDULED MARK DESIGNATIONS ARE TYPICAL TO THE PROJECT AND MAY NOT NECESSARILY BE FOUND ON THIS PLAN.
5. DEPTH OF FOOTING DIMENSIONS INDICATED ON THE PLANS ARE MINIMUMS. FOUNDATION CONTRACTOR SHALL COORDINATE WITH SOILS REPORT AND OTHER TRADES TO INSURE THAT THESE MINIMUMS ARE SUFFICIENT FOR THE WORK. SEE TYPICAL DETAILS FOR ADDITIONAL REQUIREMENTS.
6. WF1, WF2, ETC – AS SHOWN ON PLAN INDICATES CONTINUOUS WALL FOOTING, SEE SCHEDULE SHEET S006.
7. F1, F2, ETC – AS SHOWN ON PLAN INDICATES ISOLATED FOOTING, SEE SCHEDULE SHEET S006.
8. SC1, SC2, ETC – AS SHOWN ON PLAN INDICATES STEEL COLUMN, SEE SCHEDULE SHEET S006.
9. CONC C.J. – AS SHOWN ON PLAN INDICATES LOCATION OF EITHER KEYED OR SAWCUT CONTROL JOINT IN SLAB ON GRADE AT CONTRACTOR'S OPTION, SEE G.S.N. AND TYPICAL DETAIL.
10. VERIFY EXACT SIZE AND LOCATION OF OPENINGS IN PRECAST CONCRETE WALL PANELS WITH ARCHITECTURAL DRAWINGS.
11. P.J. SHOWN ON PLAN INDICATES CONCRETE PANEL JOINT.
12. 2– #5 4'–0" LONG – TYPICAL AT INTERIOR SLAB CORNERS CENTERED IN SLAB.

FOUNDATION LEGEND:

(01), (02), ETC. AS SHOWN ON PLAN INDICATES CONCRETE TILT PANEL. REFER TO SHEETS S301 – S305 FOR ADDITIONAL INFORMATION.

▶ AS SHOWN ON PLAN INDICATES MOMENT FRAME.

SC1 F1 –1'–0"
- SEE COLUMN SCHEDULE (C) FOR SIZE AND BASE CONNECTION
- SEE ISOLATED FOOTING (F) SCHEDULE FOR FOOTING SIZE AND REINFORCING
- TOP OF FOOTING ELEVATION
- TOP OF FOOTING TO BE –1'–0" BELOW FINISHED GRADE – TYPICAL U.N.O.

FOUNDATION KEYNOTES:

1. CONCRETE TILT PANEL. SEE PANEL TYPES FOR THICKNESS – SHEETS S301 – S305 – TYPICAL.
2. C.J.'s AT 4 EQUAL SPACES EACH BAY, EACH DIRECTION TYPICAL U.N.O.
3. 10'–0" WIDE CONCRETE CLOSURE POUR.
4. 4'–0" WIDE CONCRETE CLOSURE POUR.
5. PROVIDE CONTROL JOINTS AT CONCRETE CLOSURE POUR. PLACE CONTROL JOINTS HALFWAY BETWEEN TYPICAL SLAB CONTROL JOINT LAYOUT (SPACE AT 7'–6" O.C. MAX AT 4'–0" CLOSURE POUR AND 15'–0" O.C. MAX AT 10'–0" CLOSURE STRIPS).
6. STEP FOOTING PER DETAILS 04/S401, 18/S402 AND 19/S402.
7. REFERENCE CIVIL DRAWINGS FOR PAVEMENT DESIGN AT DOCK SLAB.
8. STEEL STAIRS PER DETAIL 116/S502.
9. 7" CONCRETE SLAB W/ #3 AT 16" O.C. EACH WAY OVER 4" A.B.C. FILL. SEE DETAIL 115/S502.
10. VAPOR BARRIER PER GEOTECH REPORT WITHIN HATCHED AREA AT OFFICES.
11. 1" EXPANSION JOINT BETWEEN PANELS.
12. REBAR AT RE–ENTRANT CORNERS PER TYP. DETAIL.
13. REFERENCE DETAILS 119, 120, AND 122 FOR DOCK LEVELER PITS. SEE ARCH'L FOR LOCATION.
14. 2– #6 x 20' TOP AND BOTTOM ADDITIONAL AT FOOTING.
15. 5– #6 x 20' TOP AND BOTTOM ADDITIONAL AT FOOTING.

Butler Design Group Inc.
architects & planners
5013 East Washington St. #100
Phoenix, Arizona 85034
Phone 602-957-1800

PROFESSIONAL STRUCTURAL ENGINEER No. 14160325 ROBERT HALLIDAY STATE OF UTAH

OWNERSHIP OF INSTRUMENTS OF SERVICE
REPORTS, DRAWINGS, SPECIFICATIONS, COMPUTER FILES, FIELD data, notes and other documents and instruments prepared by the design professional as instruments of service shall remain the property of the design professional. The design professional shall retain all common law, statutory and other reserved rights, including the copyright thereto.

PROPERTY RESERVE

PK Associates, L.L.C.
6900 E. Belleview Ave. #200
Greenwood Village, CO 80111
Phone: (720) 799-1058
Email: cadd@pkastructural.com
Website: www.pkastructural.com
Proj: 24295A

700 SOUTH
752 SOUTH 6200 WEST
SALT LAKE CITY, UTAH

Current Submittal: 100% CD SUBMITTAL
01/09/26

Revisions:

Project No.:	24295A
Issue Date:	02/25/2026
Drawn By:	PKA
Project Manager:	RH

Title: **PARTIAL FOUNDATION PLAN - BUILDING 1**

S111

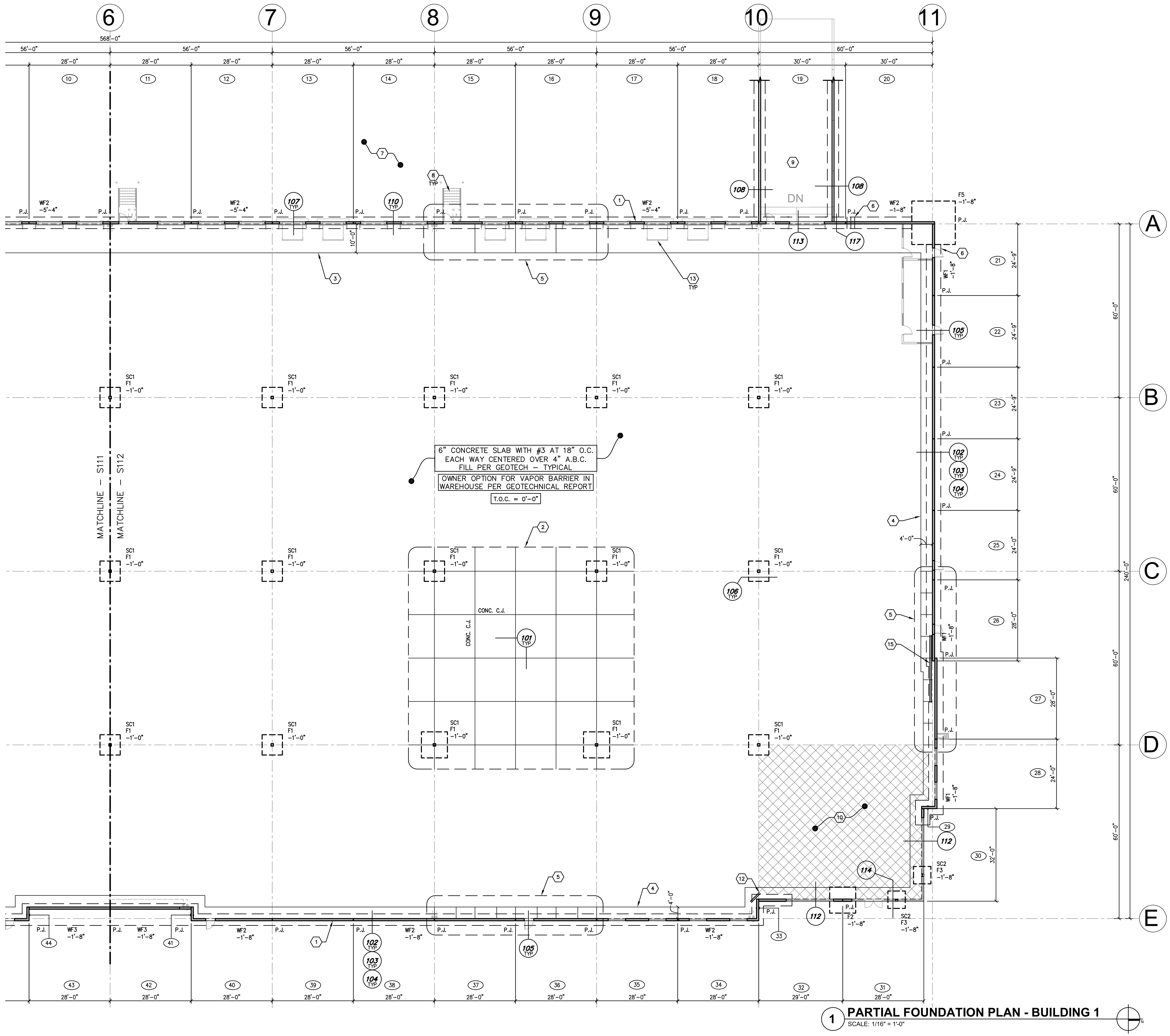

1 PARTIAL FOUNDATION PLAN - BUILDING 1
SCALE: 1/16" = 1'-0"

FOUNDATION NOTES:

1. FOR SHEET INDEX SEE GENERAL STRUCTURAL NOTES.
2. ELEVATIONS SHOWN ON PLANS ARE BASED ON DATUM ELEVATIONS SPECIFIC TO THE PROJECT. SEE ARCHITECTURAL AND CIVIL DRAWINGS FOR ACTUAL U.S.G. ELEVATIONS AND BENCHMARK LOCATION.
3. VERIFY ALL DIMENSIONS WITH ARCHITECTURAL DRAWINGS. DO NOT USE "CONC C.J." AS DIMENSION LINE OR TO LOCATE BUILDING ELEMENTS.
4. SCHEDULED MARK DESIGNATIONS ARE TYPICAL TO THE PROJECT AND MAY NOT NECESSARILY BE FOUND ON THIS PLAN.
5. DEPTH OF FOOTING DIMENSIONS INDICATED ON THE PLANS ARE MINIMUMS. FOUNDATION CONTRACTOR SHALL COORDINATE WITH SOILS REPORT AND OTHER TRADES TO INSURE THAT THESE MINIMUMS ARE SUFFICIENT FOR THE WORK. SEE TYPICAL DETAILS FOR ADDITIONAL REQUIREMENTS.
6. WF1, WF2, ETC – AS SHOWN ON PLAN INDICATES CONTINUOUS WALL FOOTING, SEE SCHEDULE SHEET S006.
7. F1, F2, ETC – AS SHOWN ON PLAN INDICATES ISOLATED FOOTING, SEE SCHEDULE SHEET S006.
8. SC1, SC2, ETC – AS SHOWN ON PLAN INDICATES STEEL COLUMN, SEE SCHEDULE SHEET S006.
9. CONC C.J. – AS SHOWN ON PLAN INDICATES LOCATION OF EITHER KEYED OR SAWCUT CONTROL JOINT IN SLAB ON GRADE AT CONTRACTOR'S OPTION, SEE G.S.N. AND TYPICAL DETAIL.
10. VERIFY EXACT SIZE AND LOCATION OF OPENINGS IN PRECAST CONCRETE WALL PANELS WITH ARCHITECTURAL DRAWINGS.
11. P.J. SHOWN ON PLAN INDICATES CONCRETE PANEL JOINT.
12. 2– #5 4'–0" LONG – TYPICAL AT INTERIOR SLAB CORNERS CENTERED IN SLAB.

FOUNDATION LEGEND:

01, 02, ETC. AS SHOWN ON PLAN INDICATES CONCRETE TILT PANEL. REFER TO SHEETS S301 – S305 FOR ADDITIONAL INFORMATION.

▶ AS SHOWN ON PLAN INDICATES MOMENT FRAME.

SC1 – SEE COLUMN SCHEDULE (C) FOR SIZE AND BASE CONNECTION
F1 – SEE ISOLATED FOOTING (F) SCHEDULE FOR FOOTING SIZE AND REINFORCING
-1'-0" – TOP OF FOOTING ELEVATION TOP OF FOOTING TO BE –1'–0" BELOW FINISHED GRADE – TYPICAL U.N.O.

FOUNDATION KEYNOTES:

1. CONCRETE TILT PANEL. SEE PANEL TYPES FOR THICKNESS – SHEETS S301 – S305 – TYPICAL.
2. C.J.'s AT 4 EQUAL SPACES EACH BAY, EACH DIRECTION TYPICAL U.N.O.
3. 10'–0" WIDE CONCRETE CLOSURE POUR.
4. 4'–0" WIDE CONCRETE CLOSURE POUR.
5. PROVIDE CONTROL JOINTS AT CONCRETE CLOSURE POUR. PLACE CONTROL JOINTS HALFWAY BETWEEN TYPICAL SLAB CONTROL JOINT LAYOUT (SPACE AT 7'–6" O.C. MAX AT 4'–0" CLOSURE POUR AND 15'–0" O.C. MAX AT 10'–0" CLOSURE STRIPS).
6. STEP FOOTING PER DETAILS 04/S401, 18/S402 AND 19/S402.
7. REFERENCE CIVIL DRAWINGS FOR PAVEMENT DESIGN AT DOCK SLAB.
8. STEEL STAIRS PER DETAIL 116/S502.
9. 7" CONCRETE SLAB W/ #3 AT 16" O.C. EACH WAY OVER 4" A.B.C. FILL. SEE DETAIL 115/S502.
10. VAPOR BARRIER PER GEOTECH REPORT WITHIN HATCHED AREA AT OFFICES.
11. 1" EXPANSION JOINT BETWEEN PANELS.
12. REBAR AT RE–ENTRANT CORNERS PER TYP. DETAIL.
13. REFERENCE DETAILS 119, 120, AND 122 FOR DOCK LEVELER PITS. SEE ARCH'L FOR LOCATION.
14. 2– #6 x 20' TOP AND BOTTOM ADDITIONAL AT FOOTING.
15. 5– #6 x 20' TOP AND BOTTOM ADDITIONAL AT FOOTING.

Butler Design Group Inc.
architects & planners
5013 East Washington St. #100
Phoenix, Arizona 85034
Phone 602-957-1800

PROFESSIONAL STRUCTURAL ENGINEER No. 14160325 ROBERT HALLIDAY STATE OF UTAH

OWNERSHIP OF INSTRUMENTS OF SERVICE

PROPERTY RESERVE

PK Associates, L.L.C.
6900 E. Belleview Ave. #200
Greenwood Village, CO 80111
Phone: (720) 799-1058
Email: cadd@pkastructural.com
Website: www.pkastructural.com
Proj: 24295A

700 SOUTH
752 SOUTH 6200 WEST
SALT LAKE CITY, UTAH

Current Submittal: 100% CD SUBMITTAL 01/09/26

Revisions:

Project No.:	24295A
Issue Date:	02/25/2026
Drawn By:	PKA
Project Manager:	RH

Title: PARTIAL FOUNDATION PLAN - BUILDING 1

S112

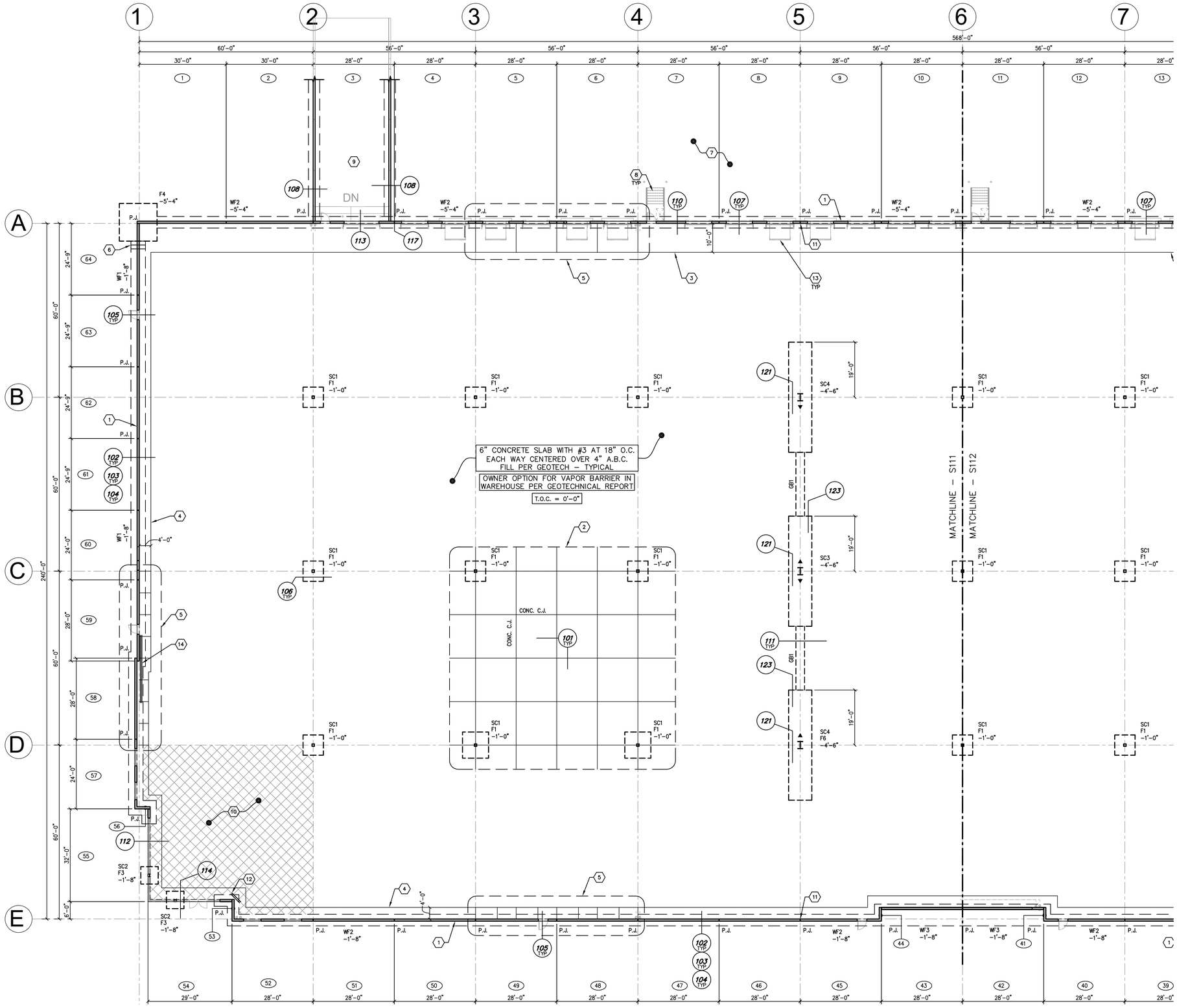

1 **PARTIAL FOUNDATION PLAN - BUILDING 1**
SCALE: 1/16" = 1'-0"

FOUNDATION NOTES:

1. FOR SHEET INDEX SEE GENERAL STRUCTURAL NOTES.
2. ELEVATIONS SHOWN ON PLANS ARE BASED ON DATUM ELEVATIONS SPECIFIC TO THE PROJECT. SEE ARCHITECTURAL AND CIVIL DRAWINGS FOR ACTUAL U.S.G. ELEVATIONS AND BENCHMARK LOCATION.
3. VERIFY ALL DIMENSIONS WITH ARCHITECTURAL DRAWINGS. DO NOT USE "CONC C.J." AS DIMENSION LINE OR TO LOCATE BUILDING ELEMENTS.
4. SCHEDULED MARK DESIGNATIONS ARE TYPICAL TO THE PROJECT AND MAY NOT NECESSARILY BE FOUND ON THIS PLAN.
5. DEPTH OF FOOTING DIMENSIONS INDICATED ON THE PLANS ARE MINIMUMS. FOUNDATION CONTRACTOR SHALL COORDINATE WITH SOILS REPORT AND OTHER TRADES TO INSURE THAT THESE MINIMUMS ARE SUFFICIENT FOR THE WORK. SEE TYPICAL DETAILS FOR ADDITIONAL REQUIREMENTS.
6. WF1, WF2, ETC – AS SHOWN ON PLAN INDICATES CONTINUOUS WALL FOOTING, SEE SCHEDULE SHEET S006.
7. F1, F2, ETC – AS SHOWN ON PLAN INDICATES ISOLATED FOOTING, SEE SCHEDULE SHEET S006.
8. SC1, SC2, ETC – AS SHOWN ON PLAN INDICATES STEEL COLUMN, SEE SCHEDULE SHEET S006.
9. CONC C.J. – AS SHOWN ON PLAN INDICATES LOCATION OF EITHER KEYED OR SAWCUT CONTROL JOINT IN SLAB ON GRADE AT CONTRACTOR'S OPTION, SEE G.S.N. AND TYPICAL DETAIL.
10. VERIFY EXACT SIZE AND LOCATION OF OPENINGS IN PRECAST CONCRETE WALL PANELS WITH ARCHITECTURAL DRAWINGS.
11. P.J. SHOWN ON PLAN INDICATES CONCRETE PANEL JOINT.
12. 2– #5 4'–0" LONG – TYPICAL AT INTERIOR SLAB CORNERS CENTERED IN SLAB.

FOUNDATION LEGEND:

(01), (02), ETC. AS SHOWN ON PLAN INDICATES CONCRETE TILT PANEL. REFER TO SHEETS S301 – S305 FOR ADDITIONAL INFORMATION.

▶ AS SHOWN ON PLAN INDICATES MOMENT FRAME.

SC1 F1 –1'–0"
- SEE COLUMN SCHEDULE (C) FOR SIZE AND BASE CONNECTION
- SEE ISOLATED FOOTING (F) SCHEDULE FOR FOOTING SIZE AND REINFORCING
- TOP OF FOOTING ELEVATION
  TOP OF FOOTING TO BE –1'–0" BELOW FINISHED GRADE – TYPICAL U.N.O.

FOUNDATION KEYNOTES:

1. CONCRETE TILT PANEL. SEE PANEL TYPES FOR THICKNESS – SHEETS S301 – S305 – TYPICAL.
2. C.J.'s AT 4 EQUAL SPACES EACH BAY, EACH DIRECTION TYPICAL U.N.O.
3. 10'–0" WIDE CONCRETE CLOSURE POUR.
4. 4'–0" WIDE CONCRETE CLOSURE POUR.
5. PROVIDE CONTROL JOINTS AT CONCRETE CLOSURE POUR. PLACE CONTROL JOINTS HALFWAY BETWEEN TYPICAL SLAB CONTROL JOINT LAYOUT (SPACE AT 7'–6" O.C. MAX AT 4'–0" CLOSURE POUR AND 15'–0" O.C. MAX AT 10'–0" CLOSURE STRIPS).
6. STEP FOOTING PER DETAILS 04/S401, 18/S402 AND 19/S402.
7. REFERENCE CIVIL DRAWINGS FOR PAVEMENT DESIGN AT DOCK SLAB.
8. STEEL STAIRS PER DETAIL 116/S502.
9. 7" CONCRETE SLAB W/ #3 AT 16" O.C. EACH WAY OVER 4" A.B.C. FILL. SEE DETAIL 115/S502.
10. VAPOR BARRIER PER GEOTECH REPORT WITHIN HATCHED AREA AT OFFICES.
11. 1" EXPANSION JOINT BETWEEN PANELS.
12. REBAR AT RE–ENTRANT CORNERS PER TYP. DETAIL.
13. REFERENCE DETAILS 119, 120, AND 122 FOR DOCK LEVELER PITS. SEE ARCH'L FOR LOCATION.
14. 2– #6 x 20' TOP AND BOTTOM ADDITIONAL AT FOOTING.
15. 5– #6 x 20' TOP AND BOTTOM ADDITIONAL AT FOOTING.

NOTE: RACKING, ATTACHMENTS, AND SEISMIC BRACING PER FUTURE SUBMITTAL.

1

Butler Design Group Inc.
architects & planners
5013 East Washington St. #100
Phoenix, Arizona 85034
Phone 602-957-1800

PROFESSIONAL STRUCTURAL ENGINEER No. 14160325 ROBERT HALLIDAY STATE OF UTAH 2/20/26

OWNERSHIP OF INSTRUMENTS OF SERVICE
REPORTS, DRAWINGS, SPECIFICATIONS, COMPUTER FILES, FIELD DATA, notes and other documents and instruments prepared by the design professional as instruments of service shall remain the property of the design professional. The design professional shall retain all common law, statutory and other reserved rights, including the copyright thereto.

PROPERTY RESERVE

PK Associates, L.L.C.
6900 E. Belleview Ave. #200
Greenwood Village, CO 80111
Phone: (720) 799-1058
Email: cadd@pkastructural.com
Website: www.pkastructural.com
Proj: 24295A

700 SOUTH

752 SOUTH 6200 WEST
SALT LAKE CITY, UTAH

Current Submittal: 100% CD SUBMITTAL 01/09/26

Revisions:
1 CITY COMMENTS 05/20/26

Project No.:	24295A
Issue Date:	02/25/2026
Drawn By:	PKA
Project Manager:	RH

Title: **PARTIAL FOUNDATION PLAN - BUILDING 1**

S111

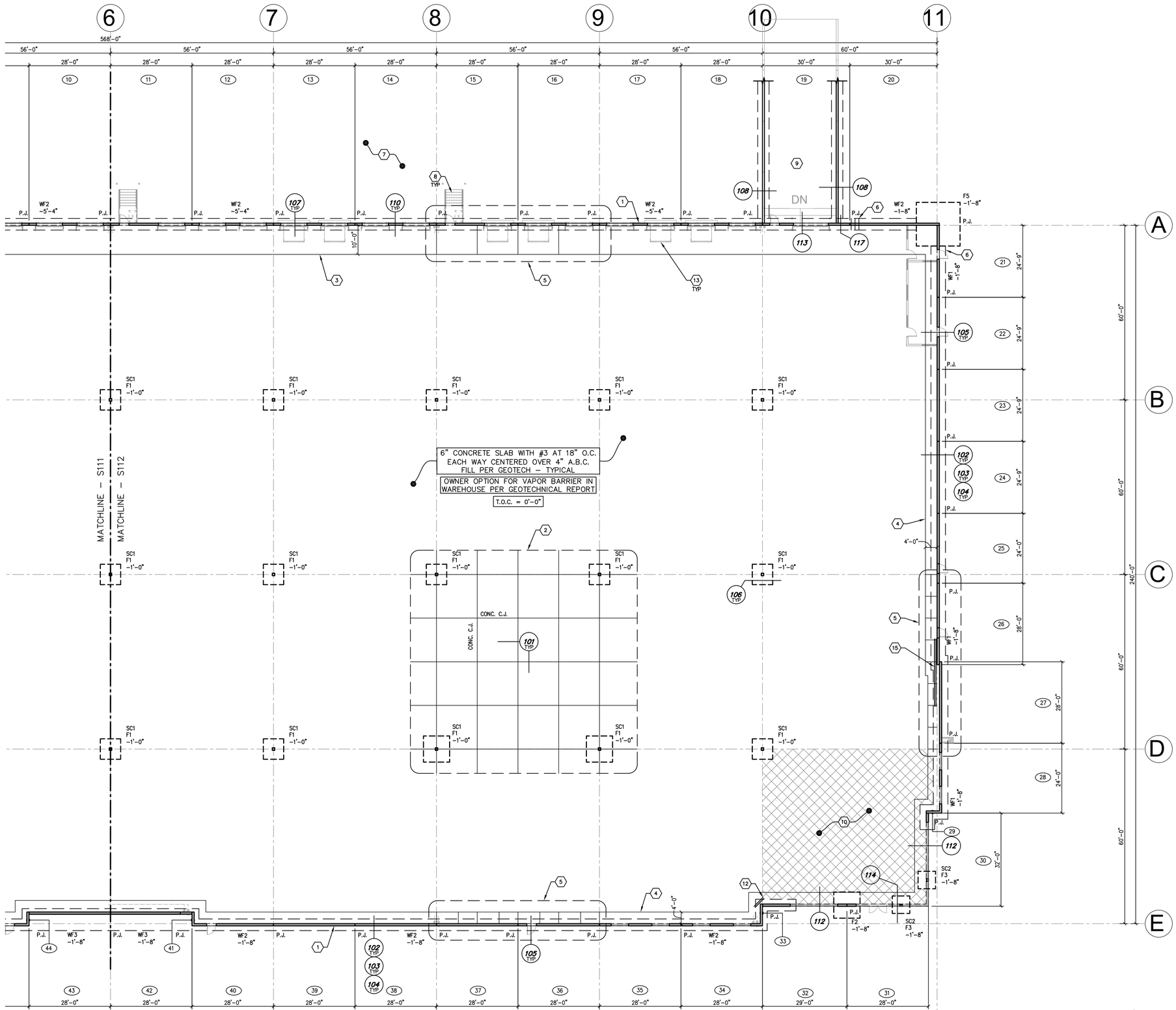

1 **PARTIAL FOUNDATION PLAN - BUILDING 1**
SCALE: 1/16" = 1'-0"

FOUNDATION NOTES:

1. FOR SHEET INDEX SEE GENERAL STRUCTURAL NOTES.
2. ELEVATIONS SHOWN ON PLANS ARE BASED ON DATUM ELEVATIONS SPECIFIC TO THE PROJECT. SEE ARCHITECTURAL AND CIVIL DRAWINGS FOR ACTUAL U.S.G. ELEVATIONS AND BENCHMARK LOCATION.
3. VERIFY ALL DIMENSIONS WITH ARCHITECTURAL DRAWINGS. DO NOT USE "CONC C.J." AS DIMENSION LINE OR TO LOCATE BUILDING ELEMENTS.
4. SCHEDULED MARK DESIGNATIONS ARE TYPICAL TO THE PROJECT AND MAY NOT NECESSARILY BE FOUND ON THIS PLAN.
5. DEPTH OF FOOTING DIMENSIONS INDICATED ON THE PLANS ARE MINIMUMS. FOUNDATION CONTRACTOR SHALL COORDINATE WITH SOILS REPORT AND OTHER TRADES TO INSURE THAT THESE MINIMUMS ARE SUFFICIENT FOR THE WORK. SEE TYPICAL DETAILS FOR ADDITIONAL REQUIREMENTS.
6. WF1, WF2, ETC – AS SHOWN ON PLAN INDICATES CONTINUOUS WALL FOOTING, SEE SCHEDULE SHEET S006.
7. F1, F2, ETC – AS SHOWN ON PLAN INDICATES ISOLATED FOOTING, SEE SCHEDULE SHEET S006.
8. SC1, SC2, ETC – AS SHOWN ON PLAN INDICATES STEEL COLUMN, SEE SCHEDULE SHEET S006.
9. CONC C.J. – AS SHOWN ON PLAN INDICATES LOCATION OF EITHER KEYED OR SAWCUT CONTROL JOINT IN SLAB ON GRADE AT CONTRACTOR'S OPTION, SEE G.S.N. AND TYPICAL DETAIL.
10. VERIFY EXACT SIZE AND LOCATION OF OPENINGS IN PRECAST CONCRETE WALL PANELS WITH ARCHITECTURAL DRAWINGS.
11. P.J. SHOWN ON PLAN INDICATES CONCRETE PANEL JOINT.
12. 2– #5 4'–0" LONG – TYPICAL AT INTERIOR SLAB CORNERS CENTERED IN SLAB.

FOUNDATION LEGEND:

01, 02, ETC. AS SHOWN ON PLAN INDICATES CONCRETE TILT PANEL. REFER TO SHEETS S301 – S305 FOR ADDITIONAL INFORMATION.

AS SHOWN ON PLAN INDICATES MOMENT FRAME.

SC1 — SEE COLUMN SCHEDULE (C) FOR SIZE AND BASE CONNECTION

F1 — SEE ISOLATED FOOTING (F) SCHEDULE FOR FOOTING SIZE AND REINFORCING

–1'–0" — TOP OF FOOTING ELEVATION
TOP OF FOOTING TO BE –1'–0" BELOW FINISHED GRADE – TYPICAL U.N.O.

FOUNDATION KEYNOTES:

1. CONCRETE TILT PANEL. SEE PANEL TYPES FOR THICKNESS – SHEETS S301 – S305 – TYPICAL.
2. C.J.'s AT 4 EQUAL SPACES EACH BAY, EACH DIRECTION TYPICAL U.N.O.
3. 10'–0" WIDE CONCRETE CLOSURE POUR.
4. 4'–0" WIDE CONCRETE CLOSURE POUR.
5. PROVIDE CONTROL JOINTS AT CONCRETE CLOSURE POUR. PLACE CONTROL JOINTS HALFWAY BETWEEN TYPICAL SLAB CONTROL JOINT LAYOUT (SPACE AT 7'–6" O.C. MAX AT 4'–0" CLOSURE POUR AND 15'–0" O.C. MAX AT 10'–0" CLOSURE STRIPS).
6. STEP FOOTING PER DETAILS 04/S401, 18/S402 AND 19/S402.
7. REFERENCE CIVIL DRAWINGS FOR PAVEMENT DESIGN AT DOCK SLAB.
8. STEEL STAIRS PER DETAIL 116/S502.
9. 7" CONCRETE SLAB W/ #3 AT 16" O.C. EACH WAY OVER 4" A.B.C. FILL. SEE DETAIL 115/S502.
10. VAPOR BARRIER PER GEOTECH REPORT WITHIN HATCHED AREA AT OFFICES.
11. 1" EXPANSION JOINT BETWEEN PANELS.
12. REBAR AT RE–ENTRANT CORNERS PER TYP. DETAIL.
13. REFERENCE DETAILS 119, 120, AND 122 FOR DOCK LEVELER PITS. SEE ARCH'L FOR LOCATION.
14. 2– #6 x 20' TOP AND BOTTOM ADDITIONAL AT FOOTING.
15. 5– #6 x 20' TOP AND BOTTOM ADDITIONAL AT FOOTING.

NOTE: RACKING, ATTACHMENTS, AND SEISMIC BRACING PER FUTURE SUBMITTAL.

1

Butler Design Group Inc.
architects & planners
5013 East Washington St. #100
Phoenix, Arizona 85034
Phone 602-957-1800

PROFESSIONAL STRUCTURAL ENGINEER
No. 14160325
ROBERT HALLIDAY
STATE OF UTAH
2/20/26

OWNERSHIP OF INSTRUMENTS OF SERVICE
REPORTS, PLANS, SPECIFICATIONS, COMPUTER FILES, FIELD DATA, notes and other documents and instruments prepared by the design professional as instruments of service shall remain the property of the design professional. The design professional shall retain all common law, statutory and other reserved rights, including the copyright thereto.

PROPERTY RESERVE

PK Associates, L.L.C.
6900 E. Belleview Ave. #200
Greenwood Village, CO 80111
Phone: (720) 799-1058
Email: cadd@pkastructural.com
Website: www.pkastructural.com
Proj: 24295A

700 SOUTH

752 SOUTH 6200 WEST
SALT LAKE CITY, UTAH

Current Submittal: 100% CD SUBMITTAL 01/09/26

Revisions:

1 CITY COMMENTS 05/20/26

Project No.:	24295A
Issue Date:	02/25/2026
Drawn By:	PKA
Project Manager:	RH

Title: **PARTIAL FOUNDATION PLAN - BUILDING 1**

S112

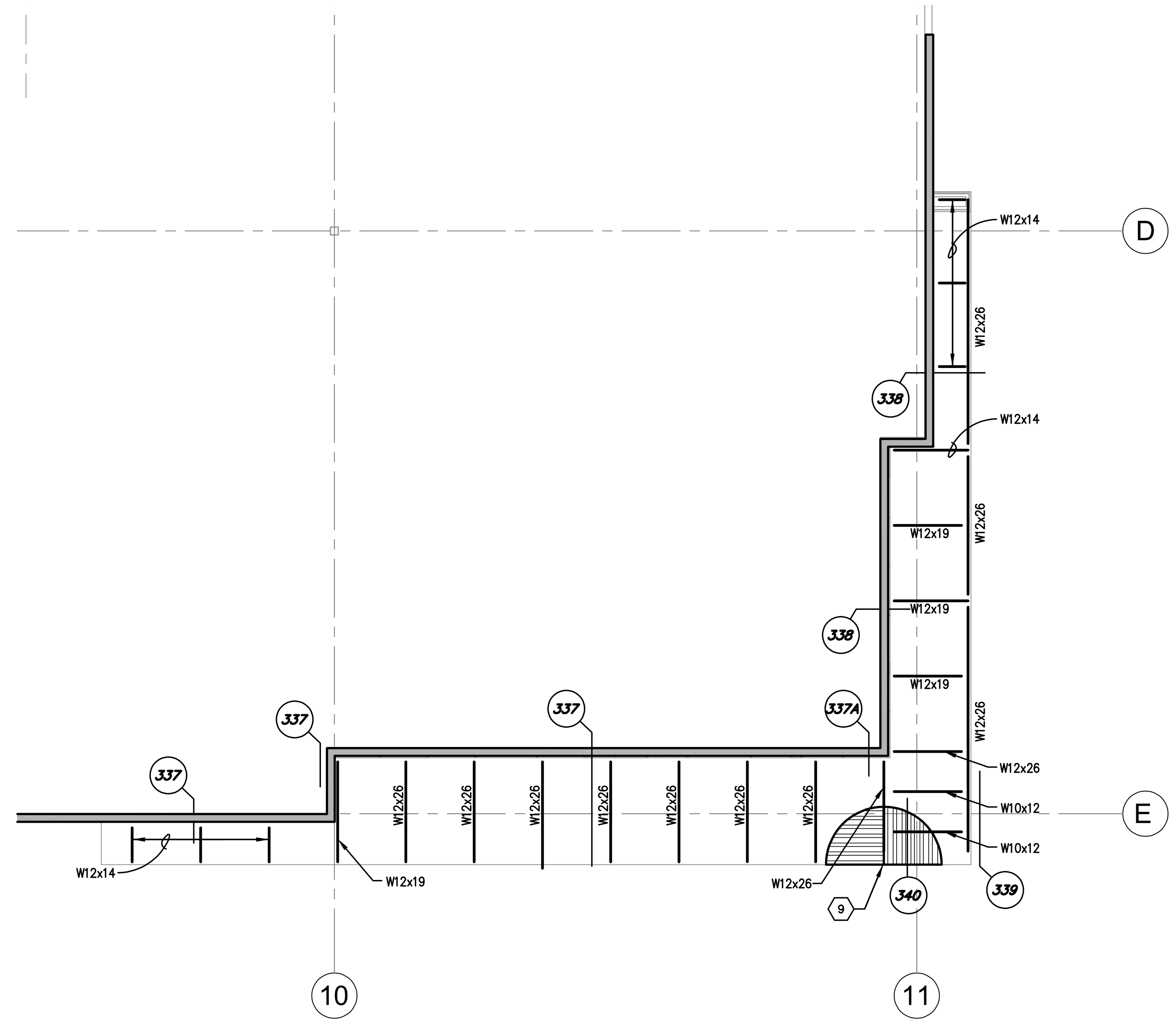

1 ENLARGED NORTH EAST CANOPY FRAMING PLAN
SCALE: 3/32" = 1'-0"

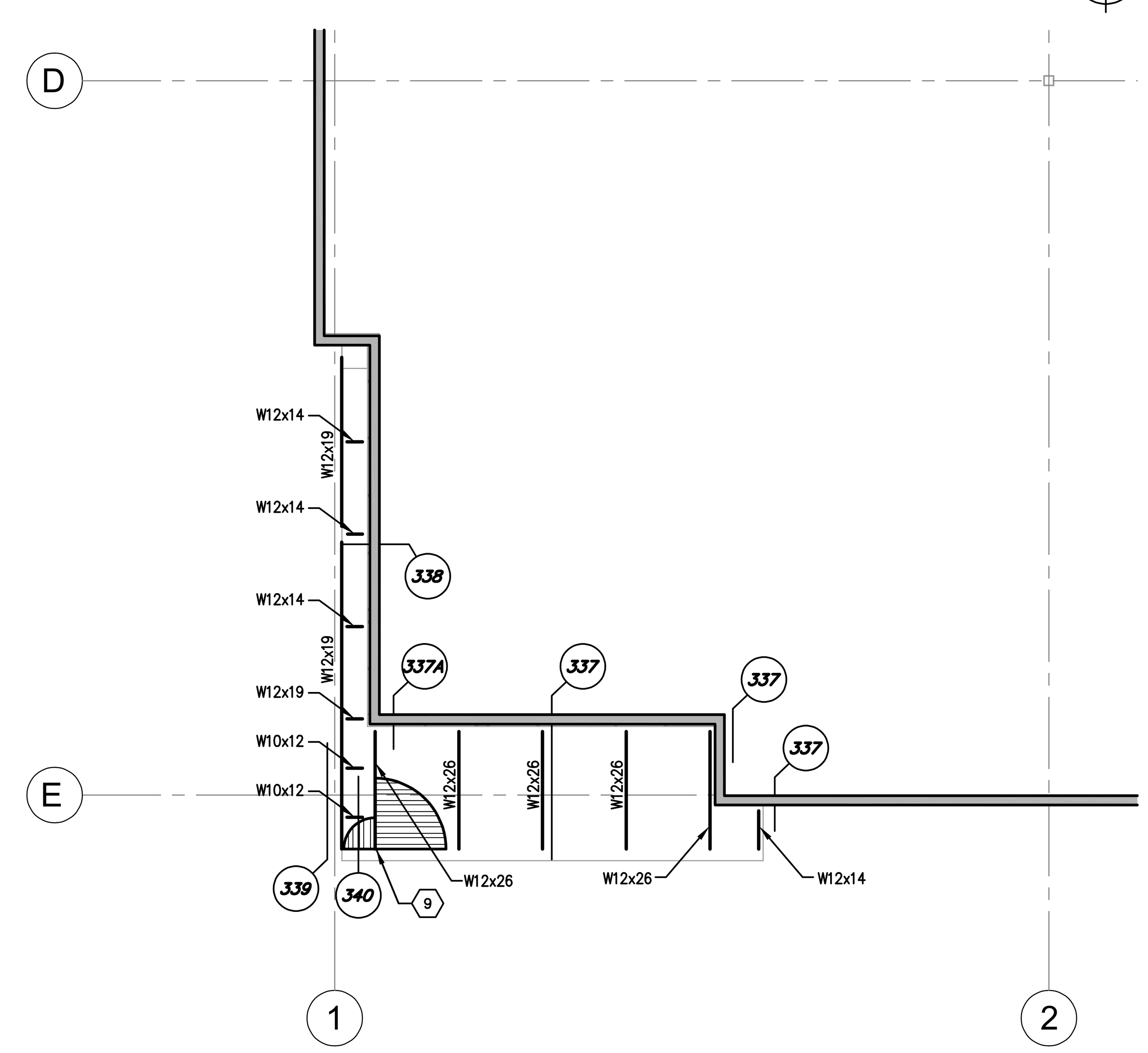

2 ENLARGED SOUTHEAST CANOPY FRAMING PLAN
SCALE: 3/32" = 1'-0"

FRAMING NOTES:

1. FOR SHEET INDEX SEE GENERAL STRUCTURAL NOTES.
2. VERIFY ALL DIMENSIONS WITH ARCHITECTURAL DRAWINGS. ROOF ELEVATIONS, WHERE SHOWN, ARE TO BE PROVIDED AND VERIFIED BY THE ARCHITECT.
3. SCHEDULED MARK DESIGNATIONS ARE TYPICAL TO THE PROJECT AND MAY NOT NECESSARILY BE FOUND ON THIS PLAN.
4. L1, L2, ETC – AS SHOWN ON PLAN INDICATES LEDGER, SEE SCHEDULE ON SHEET S006.
5. FOR CLARITY, DETAILS MAY SHOW ONLY ONE SIDE OF FRAMING CONDITION.
6. FOR CLARITY, ALL ROOF OPENINGS MAY NOT BE SHOWN ON ROOF FRAMING PLAN. FOR EXACT SIZE, NUMBER AND LOCATION OF OPENINGS, SEE ARCHITECTURAL, MECHANICAL, PLUMBING AND ELECTRICAL DRAWINGS. FOR FRAMING AT OPENINGS, SEE TYPICAL DETAILS.
7. VERIFY EXACT SIZE AND WEIGHT OF EQUIPMENT ON ROOF WITH MECHANICAL CONTRACTOR.
8. SEE UPLIFT FORCE DIAGRAM ON SHEET S005. JOIST DESIGNER TO PROVIDE BOTTOM CHORD BRIDGING DESIGNED TO RESIST WIND UPLIFT FORCES.

HATCHED AREA INDICATES SNOW DRIFT LOAD. JOIST MANUFACTURER TO DESIGN FOR DESIGNED SNOW DRIFT IN ADDITION TO ROOF SNOW LOAD.

FRAMING NOTES:

XXK — INDICATES AXIAL FORCE (ASD) DUE TO WIND/SEISMIC ON STEEL JOIST. JOIST MANUFACTURER TO DESIGN JOIST TO TRANSFER THIS LOAD.

AS SHOWN ON PLAN INDICATES MOMENT FRAME CONNECTION.

AS SHOWN ON PLAN INDICATES DRAG CONNECTION.

FRAMING KEYNOTES:

1. STEEL DECK – SEE PLAN ON SHEET S006 FOR TYPE AND ATTACHMENT.
2. STEEL CANOPY PER ARCHITECTURAL.
3. STEEL ANGLE 5x5x1/2" (Fy = 50 KSI) BETWEEM JOISTS/BEAMS AS SHOWN
4. FRAMING AT ROOF HATCH OR SKYLIGHT PER DETAIL 314.
5. SNOW DRIFT LOAD AS INDICATED ON PLAN. DRIFT LOAD IS APPLIED IN ADDITION TO FLAT ROOF SNOW LOAD ON G.S.N.
6. PROVIDE ADD'L JOIST ADJACENT TO EXPANSION JOINT.
7. ANGLE BRACES AT 8'–0" O.C. EACH SIDE OF FRAME PER DETAIL 326.
8. 4" EXPANSION JOINT.
9. 1/2"x20GA STEEL DECK 4– 5/8" WELDS AT ENDS AND INTERMEDIATE SUPPORT. SIDE LAP CONNECTION TO BE VSC2 AT 24" O.C.
10. PROTECTED ZONE. NO CONNECTIONS WITHIN THIS ZONE. REF DETAIL 333.

Butler Design Group Inc.
architects & planners
5013 East Washington St. #100
Phoenix, Arizona 85034
Phone 602-957-1800

PROFESSIONAL STRUCTURAL ENGINEER
No. 14160325
ROBERT HALLIDAY
STATE OF UTAH
2/25/26

OWNERSHIP OF INSTRUMENTS OF SERVICE
All reports, plans, specifications, computer files, field data, notes and other documents and instruments prepared by the design professional as instruments of service shall remain the property of the design professional. The design professional shall retain all common law, statutory and other reserved rights, including the copyright thereto.

PROPERTY RESERVE

PK Associates, L.L.C.
6900 E. Belleview Ave. #200
Greenwood Village, CO 80111
Phone: (720) 799-1058
Email: cadd@pkastructural.com
Website: www.pkastructural.com
Proj: 24295A

700 SOUTH

752 SOUTH 6200 WEST
SALT LAKE CITY, UTAH

Current Submittal: 100% CD SUBMITTAL
01/09/26

Revisions:

Project No.:	24295A
Issue Date:	02/25/2026
Drawn By:	PKA
Project Manager:	RH
Title:	CANOPY FRAMING PLANS

S213

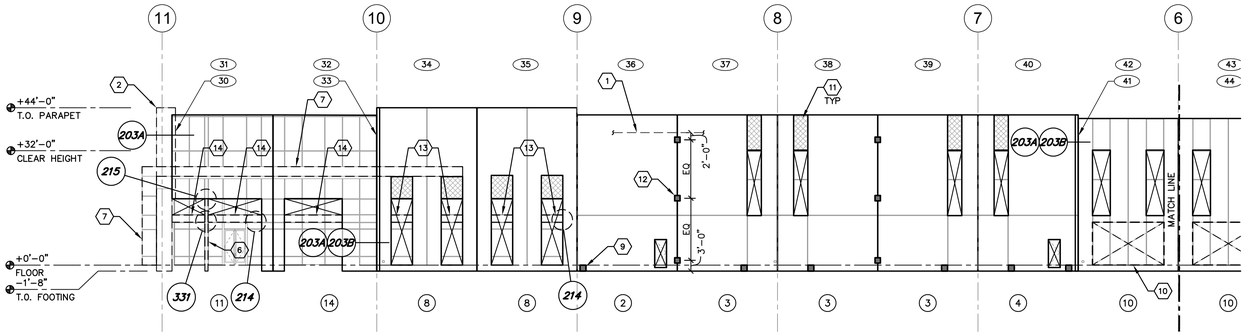

1 **BUILDING 1 - EAST ELEVATION**
SCALE: 1" = 20'-0"

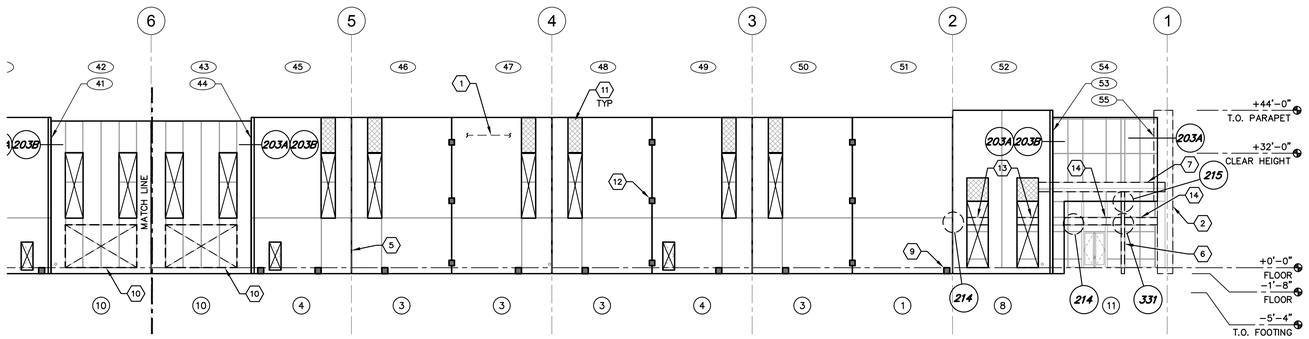

2 **BUILDING 1 - EAST ELEVATION**
SCALE: 1" = 20'-0"

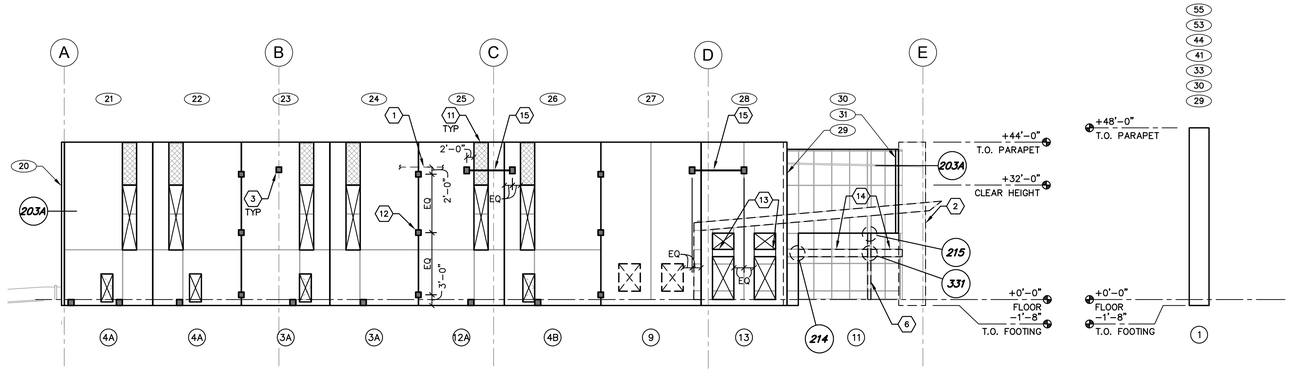

3 **BUILDING 1 - NORTH ELEVATION**
SCALE: 1" = 20'-0"

GENERAL PANEL NOTES

DIMENSION FROM BUILDING FINISHED FLOOR TO BOTTOM OF PANEL TO BE GOVERNED BY AND COORDINATED WITH FOUNDATION DETAILS CUT AT APPROPRIATE LOCATION, FOUNDATION NOTES IN G.S.N., AND FINISHED ADJACENT GRADE SHOWN ON CIVIL DRAWINGS

ALL EMBED PLATES MAY NOT BE SHOWN. SEE FRAMING PLANS AND DETAILS FOR ADDITIONAL PLATES.

DIMENSIONS SHOWN ON THIS PLAN ARE PROVIDED AS AN AIDE TO THE CONTRACTOR, AND ARE FOR REFERENCE ONLY. EXTREME CAUTION SHALL BE USED IN VERIFICATION OF ALL DIMENSIONS WITH ARCHITECTURAL DRAWINGS PRIOR TO THE START OF CONSTRUCTION. REPORT ANY DISCREPANCIES IMMEDIATELY TO THE ARCHITECT.

(1), (2) ETC. AS SHOWN INDICATES PANEL TYPE. SEE SHEET S303 FOR PANEL TYPE, REINFORCING AND CONCRETE STRENGTH.

(#) ETC. AS SHOWN INDICATES PANEL LABEL.

PANEL ELEVATION KEYNOTES

1. LINE OF ROOF
2. LINE OF PANEL BEYOND.
3. GIRDER LOCATION – TYPICAL.
4. STEP FOOTING PER TYPICAL DETAILS 04/S003 AND 18 AND 19/S004.
5. 1" EXPANSION JOINT BETWEEN PANELS.
6. LINE OF STEEL COLUMN.
7. LINE OF CANOPY PER ARCHITECTURAL.
8. PANEL RETURN PER DETAIL 209.
9. HOLD DOWN PER DETAIL 118 – TYP WHERE SHOWN.
10. FUTURE KNOCKOUT.
11. RECESS PER ARCH'L. REF DETAIL 213.
12. EMBEDS PER DETAIL 207 – TYP OF 3.
13. HSS16x4x1/4.
14. HSS18x6x3/8 STOREFRONT BEAM.
15. GIRDER BEARING BEAM PER DETAIL 335.

Butler Design Group Inc.
architects & planners

5013 East Washington St. #100
Phoenix, Arizona 85034
Phone 602-957-1800

PROFESSIONAL STRUCTURAL ENGINEER
No. 14160325
ROBERT HALLIDAY
STATE OF UTAH

OWNERSHIP OF INSTRUMENTS OF SERVICE
REPORTS, PLANS, SPECIFICATIONS, COMPUTER FILES, field data, notes and other documents and instruments prepared by the design professional as instruments of service shall remain the property of the design professional. The design professional shall retain all common law, statutory and other reserved rights, including the copyright thereto.

PROPERTY RESERVE

PK Associates, L.L.C.
6900 E. Belleview Ave. #200
Greenwood Village, CO 80111
Phone: (720) 799-1058
Email: cadd@pkastructural.com
Website: www.pkastructural.com
Proj: 24295A

700 SOUTH

752 SOUTH 6200 WEST
SALT LAKE CITY, UTAH

Current Submittal: 100% CD SUBMITTAL
01/09/26

Revisions:

Project No.:	24295A
Issue Date:	02/25/2026
Drawn By:	PKA
Project Manager:	RH

Title:
BUILDING 1 - PANEL ELEVATION

S301

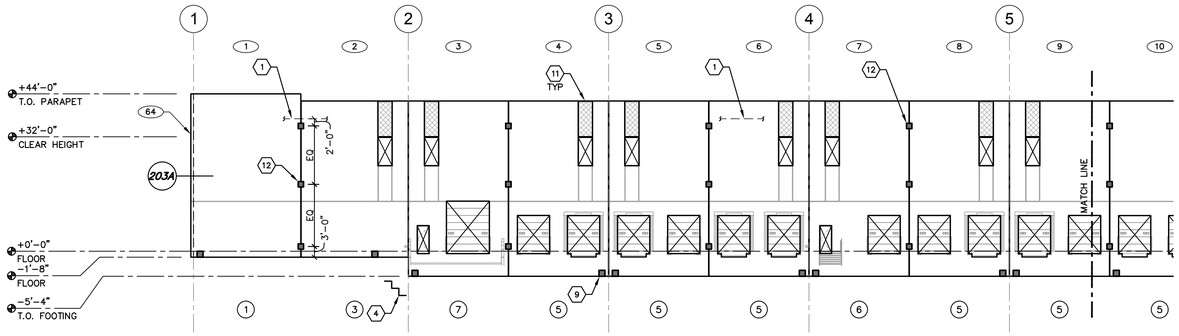

1 BUILDING 1 - WEST ELEVATION

SCALE: 1" = 20'-0"

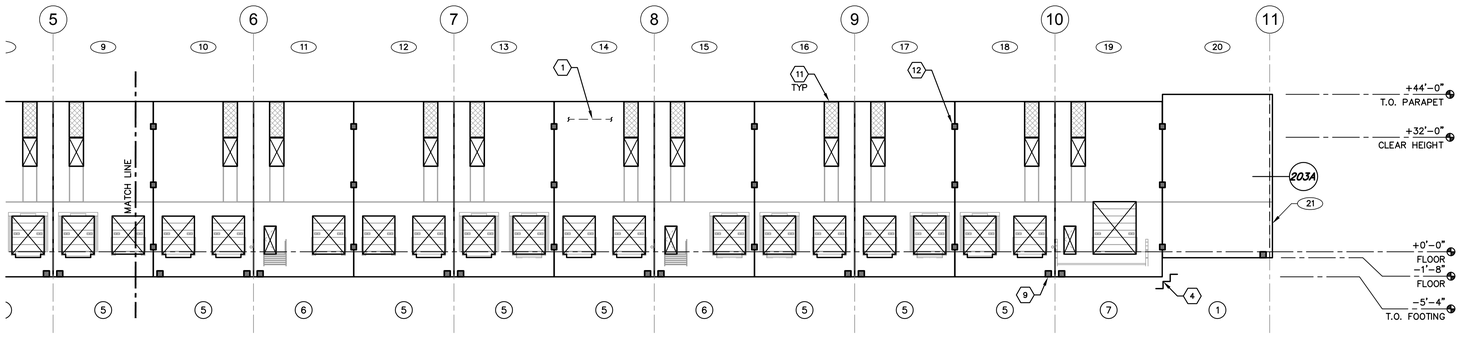

2 BUILDING 1 - WEST ELEVATION

SCALE: 1" = 20'-0"

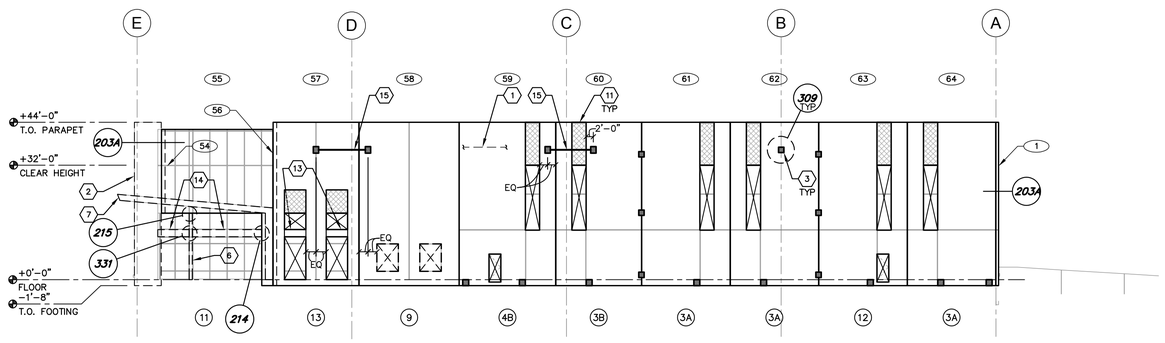

3 BUILDING 1 - SOUTH ELEVATION

SCALE: 1" = 20'-0"

GENERAL PANEL NOTES

DIMENSION FROM BUILDING FINISHED FLOOR TO BOTTOM OF PANEL TO BE GOVERNED BY AND COORDINATED WITH FOUNDATION DETAILS CUT AT APPROPRIATE LOCATION, FOUNDATION NOTES IN G.S.N., AND FINISHED ADJACENT GRADE SHOWN ON CIVIL DRAWINGS

ALL EMBED PLATES MAY NOT BE SHOWN. SEE FRAMING PLANS AND DETAILS FOR ADDITIONAL PLATES.

DIMENSIONS SHOWN ON THIS PLAN ARE PROVIDED AS AN AIDE TO THE CONTRACTOR, AND ARE FOR REFERENCE ONLY. EXTREME CAUTION SHALL BE USED IN VERIFICATION OF ALL DIMENSIONS WITH ARCHITECTURAL DRAWINGS PRIOR TO THE START OF CONSTRUCTION. REPORT ANY DISCREPANCIES IMMEDIATELY TO THE ARCHITECT.

(1), (2) ETC. AS SHOWN INDICATES PANEL TYPE. SEE SHEET S303 FOR PANEL TYPE, REINFORCING AND CONCRETE STRENGTH.

(#) ETC. AS SHOWN INDICATES PANEL LABEL.

PANEL ELEVATION KEYNOTES

1. LINE OF ROOF
2. LINE OF PANEL BEYOND.
3. GIRDER LOCATION – TYPICAL.
4. STEP FOOTING PER TYPICAL DETAILS 04/S003 AND 18 AND 19/S004.
5. 1" EXPANSION JOINT BETWEEN PANELS.
6. LINE OF STEEL COLUMN.
7. LINE OF CANOPY PER ARCHITECTURAL.
8. PANEL RETURN PER DETAIL 209.
9. HOLD DOWN PER DETAIL 118 – TYP WHERE SHOWN.
10. FUTURE KNOCKOUT.
11. RECESS PER ARCH'L. REF DETAIL 213.
12. EMBEDS PER DETAIL 207 – TYP OF 3.
13. HSS16x4x1/4.
14. HSS18x6x3/8 STOREFRONT BEAM.
15. GIRDER BEARING BEAM PER DETAIL 335.

Butler Design Group Inc.
architects & planners
5013 East Washington St. #100
Phoenix, Arizona 85034
Phone 602-957-1800

PROFESSIONAL STRUCTURAL ENGINEER No. 14160325 ROBERT HALLIDAY STATE OF UTAH

OWNERSHIP OF INSTRUMENTS OF SERVICE
REPORTS, PLANS, SPECIFICATIONS, COMPUTER FILES, field data, notes and other documents and instruments prepared by the design professional as instruments of service shall remain the property of the design professional. The design professional shall retain all common law, statutory and other reserved rights, including the copyright thereto.

PROPERTY RESERVE

PK Associates, L.L.C.
6900 E. Belleview Ave. #200
Greenwood Village, CO 80111
Phone: (720) 799-1058
Email: cadd@pkastructural.com
Website: www.pkastructural.com
Proj: 24295A

700 SOUTH

752 SOUTH 6200 WEST
SALT LAKE CITY, UTAH

Current Submittal: 100% CD SUBMITTAL
01/09/26

Revisions:

Project No.:	24295A
Issue Date:	02/25/2026
Drawn By:	PKA
Project Manager:	RH

Title: BUILDING 1 - PANEL ELEVATION

S302

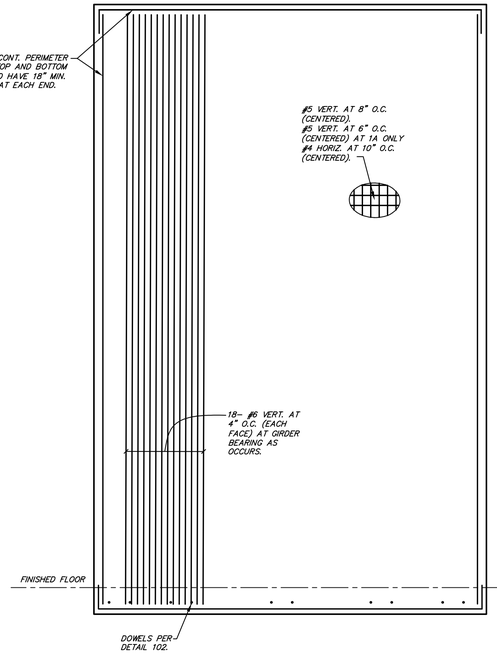

TYPE 1
(f'c = 5000psi) NO SCALE

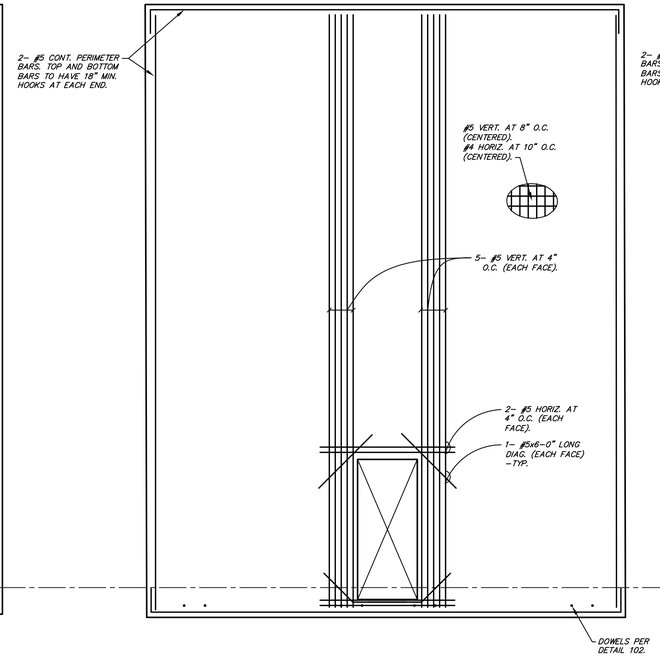

TYPE 2
(f'c = 5000psi) NO SCALE

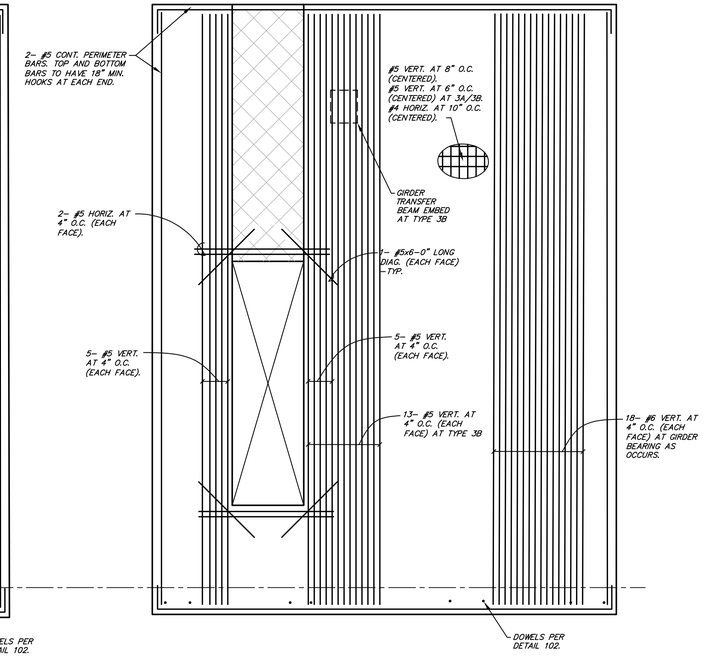

TYPE 3/3A/3B
(f'c = 5000psi, 6KSI AT 3A/3B) NO SCALE

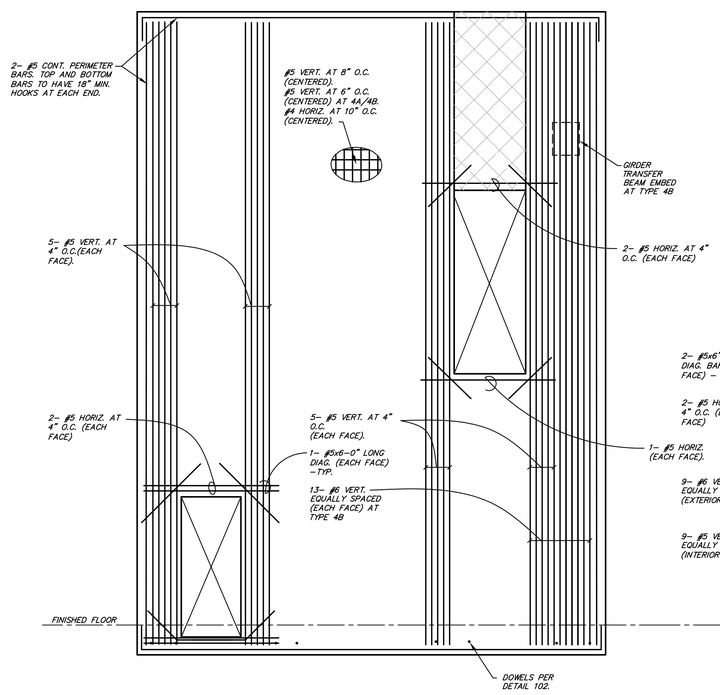

TYPE 4/4A/4B
(f'c = 5000psi, 6000PSI AT 4A/4B) NO SCALE

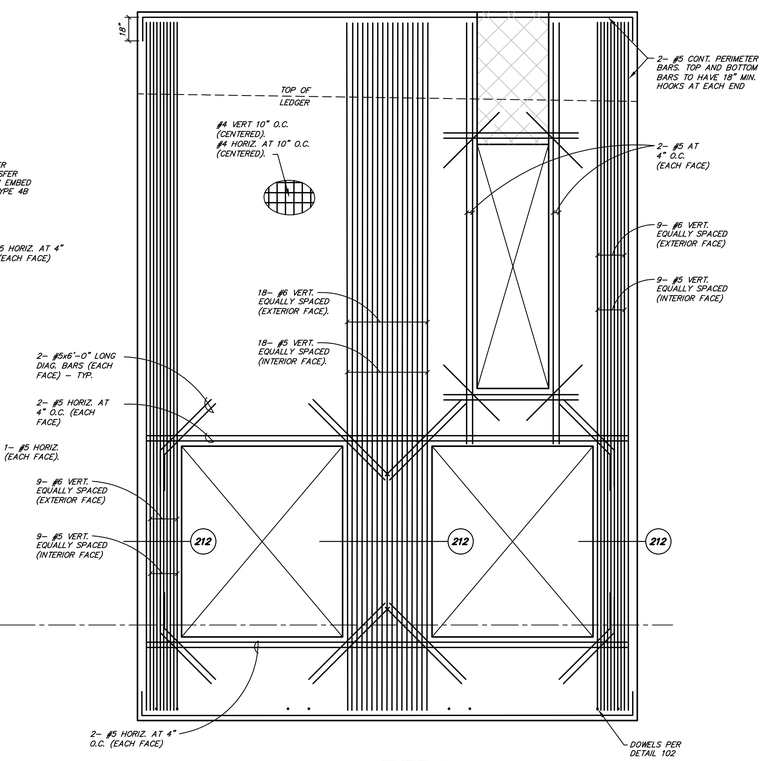

TYPE 5
(f'c = 6000psi) NO SCALE

TILT–UP CONCRETE PANEL NOTES:

NOTE:
SEE SHEETS S601 AND S602 FOR TYPICAL PANEL DETAILS.

1. PANEL ELEVATIONS ARE BY TYPE REFERENCE OR REINFORCING REQUIRED AND SHOWING ONLY PARTIAL LISTING OF EMBEDMENTS AND EXTREME CAUTION SHALL BE EXERCISED BY THE CONTRACTOR TO LAY OUT PANELS TO PROPER DIMENSIONS WITH REQUIRED REINFORCING, OPENINGS AND EMBEDMENTS REQUIRED FOR EACH PANEL.
2. ALL PANEL ELEVATIONS ARE AS VIEWED FROM THE INTERIOR SIDE OF THE BUILDING EXCEPT WHERE NOTED OTHERWISE. SEE ARCHITECTURAL EXTERIOR ELEVATIONS FOR LOCATIONS AND TYPES OF TEXTURES AND REVEALS.
3. DO NOT SCALE ANY PANEL ELEVATIONS SHOWN HEREIN. REFER TO PLANS AND PANEL ELEVATIONS FOR ALL DIMENSIONS. WHERE DIMENSIONS ARE SHOWN, IT IS INTENDED ONLY AS AN AID TO THE CONTRACTOR IN PROVIDING SHOP DRAWINGS. CONTRACTOR SHALL BE RESPONSIBLE FOR VERIFICATION OF ALL DIMENSIONS WITH ARCHITECTURAL DRAWINGS PRIOR TO START OF CONSTRUCTION. RESOLVE ANY DISCREPANCY WITH ARCHITECT.
4. DIMENSIONS FROM BUILDING FINISHED FLOORS TO BOTTOM OF PANEL TO BE GOVERNED BY THE APPROPRIATELY FLAGGED FOUNDATION DETAIL FOR EACH PARTICULAR LOCATION, USED IN CONJUNCTION WITH FINISHED GRADES ADJACENT TO BUILDINGS SHOWN ON CIVIL ENGINEERING DRAWINGS. VERIFY WITH FLAGGED DETAILS ON ARCHITECTURAL DRAWINGS.
5. ALL PANEL OPENINGS MAY NOT BE SHOWN ON THE ELEVATIONS. FOR EXACT SIZE, NUMBER AND LOCATION OF OPENINGS, SEE ARCHITECTURAL, MECHANICAL, PLUMBING AND ELECTRICAL DRAWINGS. RESOLVE ANY DISCREPANCY THRU THE ARCHITECT.
6. SEE PLANS, ELEVATIONS, SECTIONS, NOTES AND/OR DETAILS FOR ALL HEIGHTS, OPENINGS, EMBEDDED ITEMS, ETC.
7. PROVIDE 3/4" X 3/4" CHAMFERS AT ALL EXPOSED PANEL EDGES AND CORNERS, UNLESS NOTED OTHERWISE.
8. REINFORCING SHOWN IS FOR IN–PLACE CONDITION. CONTRACTOR SHALL BE RESPONSIBLE FOR PICK UP POINT INSERTS AND LOCATIONS, SPECIAL PICK UP REINFORCING AND STRONG BACKS, AND ALL PICK UP PLACING OPERATIONS.
9. ALL "TYPICAL REINFORCING" SHALL BE TYPICAL THRU–OUT PANEL WITH OTHER REINFORCING SHOWN IN ADDITION TO TYPICAL REINFORCING, UNLESS OTHERWISE NOTED.
10. ALL REINFORCING TO BE CENTERED IN DESIGN PANEL THICKNESS. ALL PERIMETER REINFORCING AND REINFORCING AT PERIMETERS OF OPENINGS IN PANELS TO BE 1 1/2" IN FROM EDGE.
11. ALL TOP AND BOTTOM PANEL PERIMETER BARS TO HAVE 18" HOOK AT EACH END. ALL OPENINGS SIDE PERIMETER BARS TO HAVE 6" HOOK AT BOTTOM. ALL HORIZONTAL REINFORCING AT TOP OF OPENINGS TO EXTEND 2'–0" BEYOND EACH OPENINGS, UNLESS OTHERWISE SHOWN. SEE TYPICAL OPENING IN PRECAST CONCRETE PANEL DETAIL FOR ADDITIONAL INFORMATION.
12. PANEL CHORD TIES, IF INDICATED SHALL BE LOCATED WITHIN 2'–0" BELOW TOP OF LEDGERS, UNLESS NOTED OTHERWISE.
13. FOR WELDING OF ASTM A706–GRADE 60 REINFORCING BARS, USE E90 SERIES LOW HYDROGEN RODS.
14. ALL PANEL JOINTS TO BE 3/4" AND SEALED WITH BUTYL ROD AND THIOKOL CAULKING ON INTERIOR AND EXTERIOR FACES, U.N.O. IN ARCHITECTURAL SPECIFICATIONS.
15. ALL PANELS REQUIRED TO HAVE A ONE HOUR FIRE RATING SHALL HAVE 1 1/2" MINIMUM CLEAR COVER TO REINFORCING IN LIEU OF 1" CLEAR WHICH IS TYPICALLY DETAILED ON THESE DRAWINGS. NOTIFY ENGINEER IMMEDIATELY IF CONFLICT EXISTS.

TYPICAL REINFORCING U.N.O.

BUILDING 1 OVERALL THICKNESS ----------9".
BUILDING 1 DESIGN THICKNESS ---------- 8 1/4"
VERTICAL BARS ---------- SEE PANEL TYPES
HORIZONTAL BARS ---------- SEE PANEL TYPES
PANEL PERIMETER BARS ---------- 2– #5
OPENING PERIMETER BARS ---------- 2– #5 U.N.O.

Butler Design Group Inc.
architects & planners
5013 East Washington St. #100
Phoenix, Arizona 85034
Phone 602-957-1800

PROFESSIONAL STRUCTURAL ENGINEER
No. 14160325
ROBERT HALLIDAY
STATE OF UTAH
REVISED

OWNERSHIP OF INSTRUMENTS OF SERVICE
REPORTS, PLANS, SPECIFICATIONS, COMPUTER FILES, FIELD DATA, notes and other documents and instruments prepared by the design professional as instruments of service shall remain the property of the design professional. The design professional shall retain all common law, statutory and other reserved rights, including the copyright thereto.

PROPERTY RESERVE

PK Associates, L.L.C.
6900 E. Belleview Ave. #200
Greenwood Village, CO 80111
Phone: (720) 799-1058
Email: cadd@pkastructural.com
Website: www.pkastructural.com
Proj: 24295A

700 SOUTH

752 SOUTH 6200 WEST
SALT LAKE CITY, UTAH

Current Submittal: 100% CD SUBMITTAL
01/09/26

Revisions:

Project No.:	24295A
Issue Date:	02/25/2026
Drawn By:	PKA
Project Manager:	RH
Title:	PANEL TYPES

S303

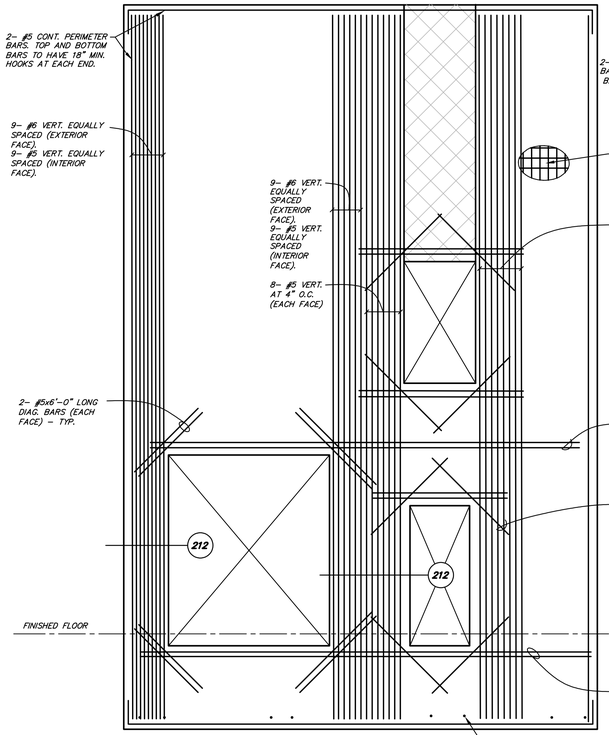

TYPE 6
(f'c = 6000psi) NO SCALE

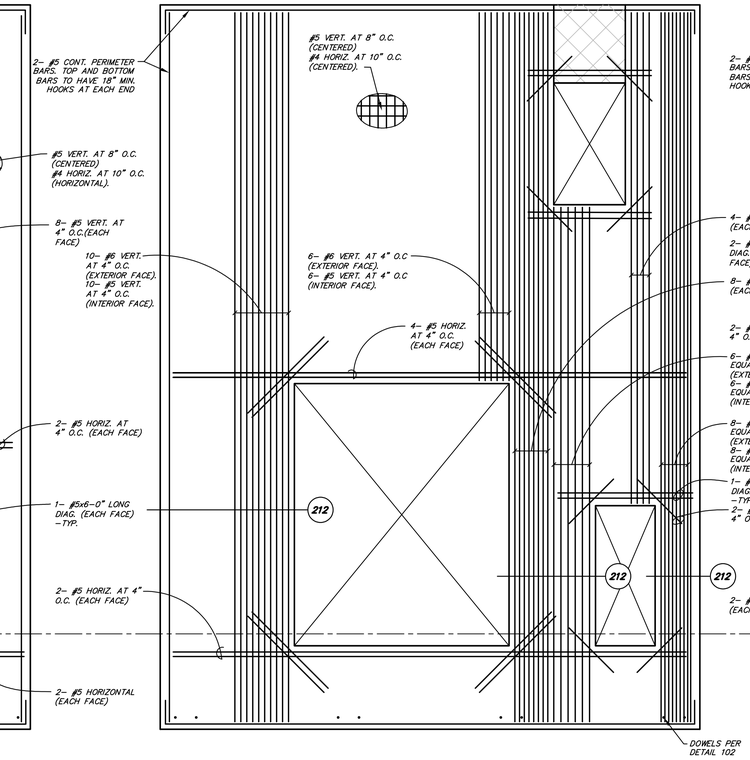

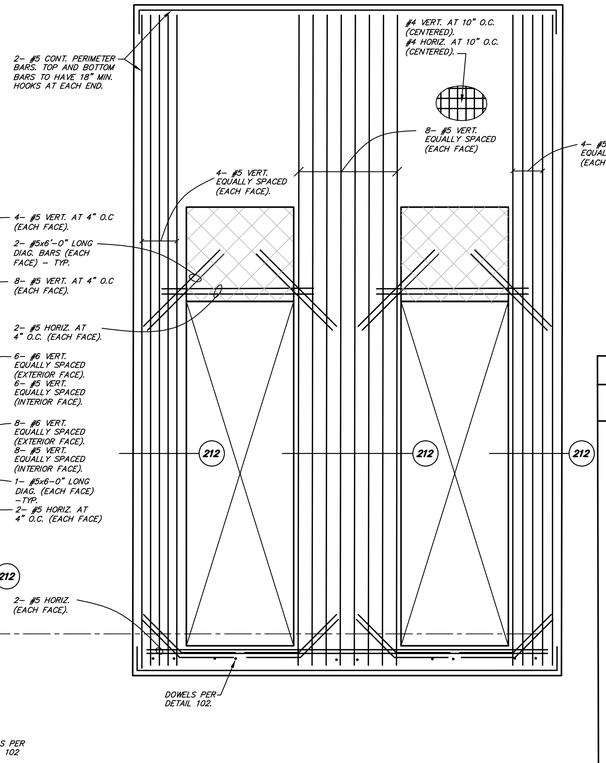

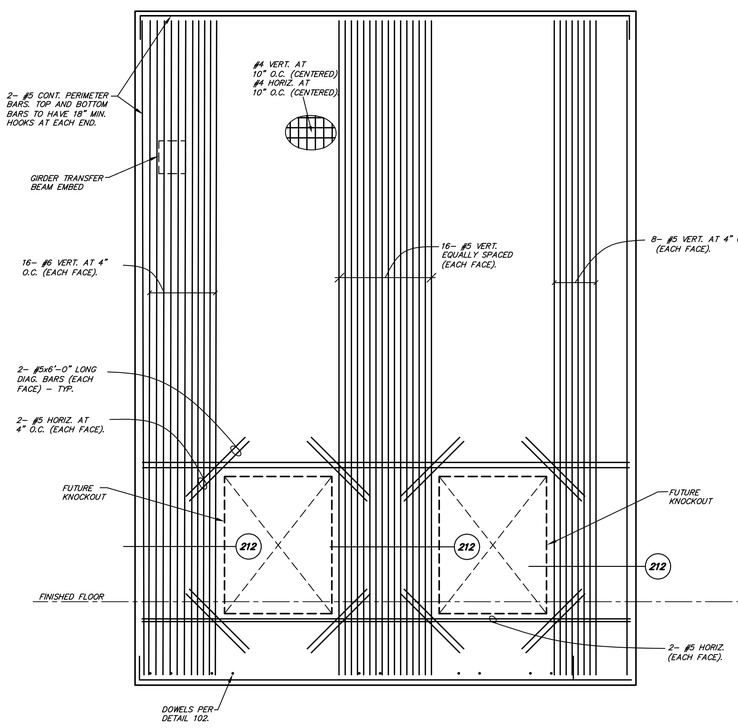

TYPE 9
(f'c = 6000psi) NO SCALE

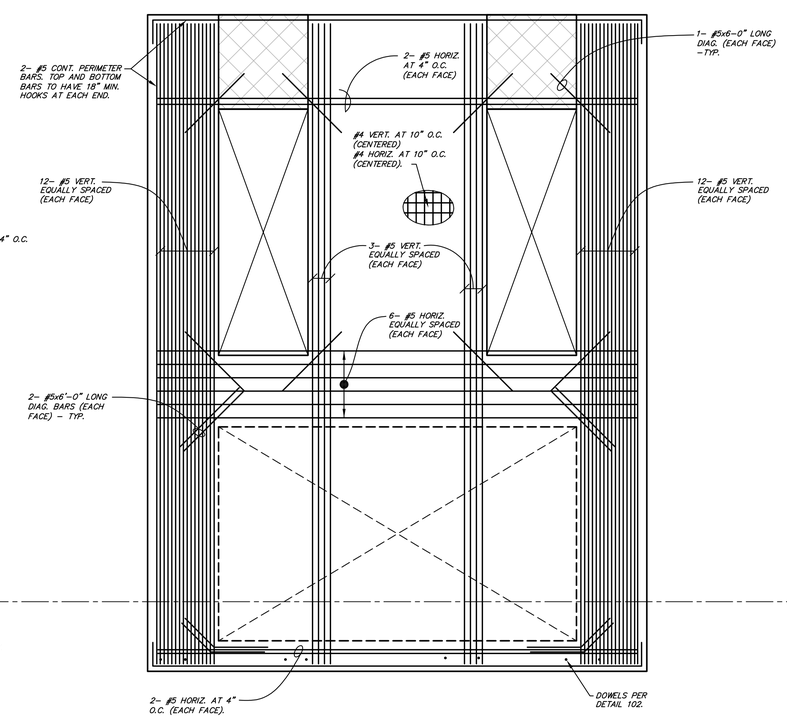

TYPE 10
(f'c = 5000psi) NO SCALE

TILT–UP CONCRETE PANEL NOTES:

NOTE:
SEE SHEETS S601 AND S602 FOR TYPICAL PANEL DETAILS.

1. PANEL ELEVATIONS ARE BY TYPE REFERENCE OR REINFORCING REQUIRED AND SHOWING ONLY PARTIAL LISTING OF EMBEDMENTS AND EXTREME CAUTION SHALL BE EXERCISED BY THE CONTRACTOR TO LAY OUT PANELS TO PROPER DIMENSIONS WITH REQUIRED REINFORCING, OPENINGS AND EMBEDMENTS REQUIRED FOR EACH PANEL.
2. ALL PANEL ELEVATIONS ARE AS VIEWED FROM THE INTERIOR SIDE OF THE BUILDING EXCEPT WHERE NOTED OTHERWISE. SEE ARCHITECTURAL EXTERIOR ELEVATIONS FOR LOCATIONS AND TYPES OF TEXTURES AND REVEALS.
3. DO NOT SCALE ANY PANEL ELEVATIONS SHOWN HEREIN. REFER TO PLANS AND PANEL ELEVATIONS FOR ALL DIMENSIONS. WHERE DIMENSIONS ARE SHOWN, IT IS INTENDED ONLY AS AN AID TO THE CONTRACTOR IN PROVIDING SHOP DRAWINGS. CONTRACTOR SHALL BE RESPONSIBLE FOR VERIFICATION OF ALL DIMENSIONS WITH ARCHITECTURAL DRAWINGS PRIOR TO START OF CONSTRUCTION. RESOLVE ANY DISCREPANCY WITH ARCHITECT.
4. DIMENSIONS FROM BUILDING FINISHED FLOORS TO BOTTOM OF PANEL TO BE GOVERNED BY THE APPROPRIATELY FLAGGED FOUNDATION DETAIL FOR EACH PARTICULAR LOCATION, USED IN CONJUNCTION WITH FINISHED GRADES ADJACENT TO BUILDINGS SHOWN ON CIVIL ENGINEERING DRAWINGS. VERIFY WITH FLAGGED DETAILS ON ARCHITECTURAL DRAWINGS.
5. ALL PANEL OPENINGS MAY NOT BE SHOWN ON THE ELEVATIONS. FOR EXACT SIZE, NUMBER AND LOCATION OF OPENINGS, SEE ARCHITECTURAL, MECHANICAL, PLUMBING AND ELECTRICAL DRAWINGS. RESOLVE ANY DISCREPANCY THRU THE ARCHITECT.
6. SEE PLANS, ELEVATIONS, SECTIONS, NOTES AND/OR DETAILS FOR ALL HEIGHTS, OPENINGS, EMBEDDED ITEMS, ETC.
7. PROVIDE 3/4" X 3/4" CHAMFERS AT ALL EXPOSED PANEL EDGES AND CORNERS, UNLESS NOTED OTHERWISE.
8. REINFORCING SHOWN IS FOR IN–PLACE CONDITION. CONTRACTOR SHALL BE RESPONSIBLE FOR PICK UP POINT INSERTS AND LOCATIONS, SPECIAL PICK UP REINFORCING AND STRONG BACKS, AND ALL PICK UP PLACING OPERATIONS.
9. ALL "TYPICAL REINFORCING" SHALL BE TYPICAL THRU–OUT PANEL WITH OTHER REINFORCING SHOWN IN ADDITION TO TYPICAL REINFORCING, UNLESS OTHERWISE NOTED.
10. ALL REINFORCING TO BE CENTERED IN DESIGN PANEL THICKNESS. ALL PERIMETER REINFORCING AND REINFORCING AT PERIMETERS OF OPENINGS IN PANELS TO BE 1 1/2" IN FROM EDGE.
11. ALL TOP AND BOTTOM PANEL PERIMETER BARS TO HAVE 18" HOOK AT EACH END. ALL OPENINGS SIDE PERIMETER BARS TO HAVE 6" HOOK AT BOTTOM. ALL HORIZONTAL REINFORCING AT TOP OF OPENINGS TO EXTEND 2'–0" BEYOND EACH OPENINGS, UNLESS OTHERWISE SHOWN. SEE TYPICAL OPENING IN PRECAST CONCRETE PANEL DETAIL FOR ADDITIONAL INFORMATION.
12. PANEL CHORD TIES, IF INDICATED SHALL BE LOCATED WITHIN 2'–0" BELOW TOP OF LEDGERS, UNLESS NOTED OTHERWISE.
13. FOR WELDING OF ASTM A706–GRADE 60 REINFORCING BARS, USE E90 SERIES LOW HYDROGEN RODS.
14. ALL PANEL JOINTS TO BE 3/4" AND SEALED WITH BUTYL ROD AND THIOKOL CAULKING ON INTERIOR AND EXTERIOR FACES, U.N.O. IN ARCHITECTURAL SPECIFICATIONS.
15. ALL PANELS REQUIRED TO HAVE A ONE HOUR FIRE RATING SHALL HAVE 1 1/2" MINIMUM CLEAR COVER TO REINFORCING IN LIEU OF 1" CLEAR WHICH IS TYPICALLY DETAILED ON THESE DRAWINGS. NOTIFY ENGINEER IMMEDIATELY IF CONFLICT EXISTS.

TYPICAL REINFORCING U.N.O.

BUILDING 1 OVERALL THICKNESS ----------9".
BUILDING 1 DESIGN THICKNESS ---------- 8 1/4"
VERTICAL BARS ---------- SEE PANEL TYPES
HORIZONTAL BARS ---------- SEE PANEL TYPES
PANEL PERIMETER BARS ---------- 2– #5
OPENING PERIMETER BARS ---------- 2– #5 U.N.O.

Butler Design Group Inc.
architects & planners
5013 East Washington St. #100
Phoenix, Arizona 85034
Phone 602-957-1800

PROFESSIONAL STRUCTURAL ENGINEER
No. 14160325
ROBERT HALLIDAY
STATE OF UTAH
REGISTERED

OWNERSHIP OF INSTRUMENTS OF SERVICE
REPORTS, DRAWINGS, SPECIFICATIONS, COMPUTER FILES, FIELD data, notes and other documents and instruments prepared by the design professional as instruments of service shall remain the property of the design professional. The design professional shall retain all common law, statutory and other reserved rights, including the copyright thereto.

PROPERTY RESERVE

PK Associates, L.L.C.
6900 E. Belleview Ave. #200
Greenwood Village, CO 80111
Phone: (720) 799-1058
Email: cadd@pkastructural.com
Website: www.pkastructural.com
Proj: 24295A

700 SOUTH

752 SOUTH 6200 WEST
SALT LAKE CITY, UTAH

Current Submittal: 100% CD SUBMITTAL
01/09/26

Revisions:

Project No.:	24295A
Issue Date:	02/25/2026
Drawn By:	PKA
Project Manager:	RH
Title:	PANEL TYPES

S304

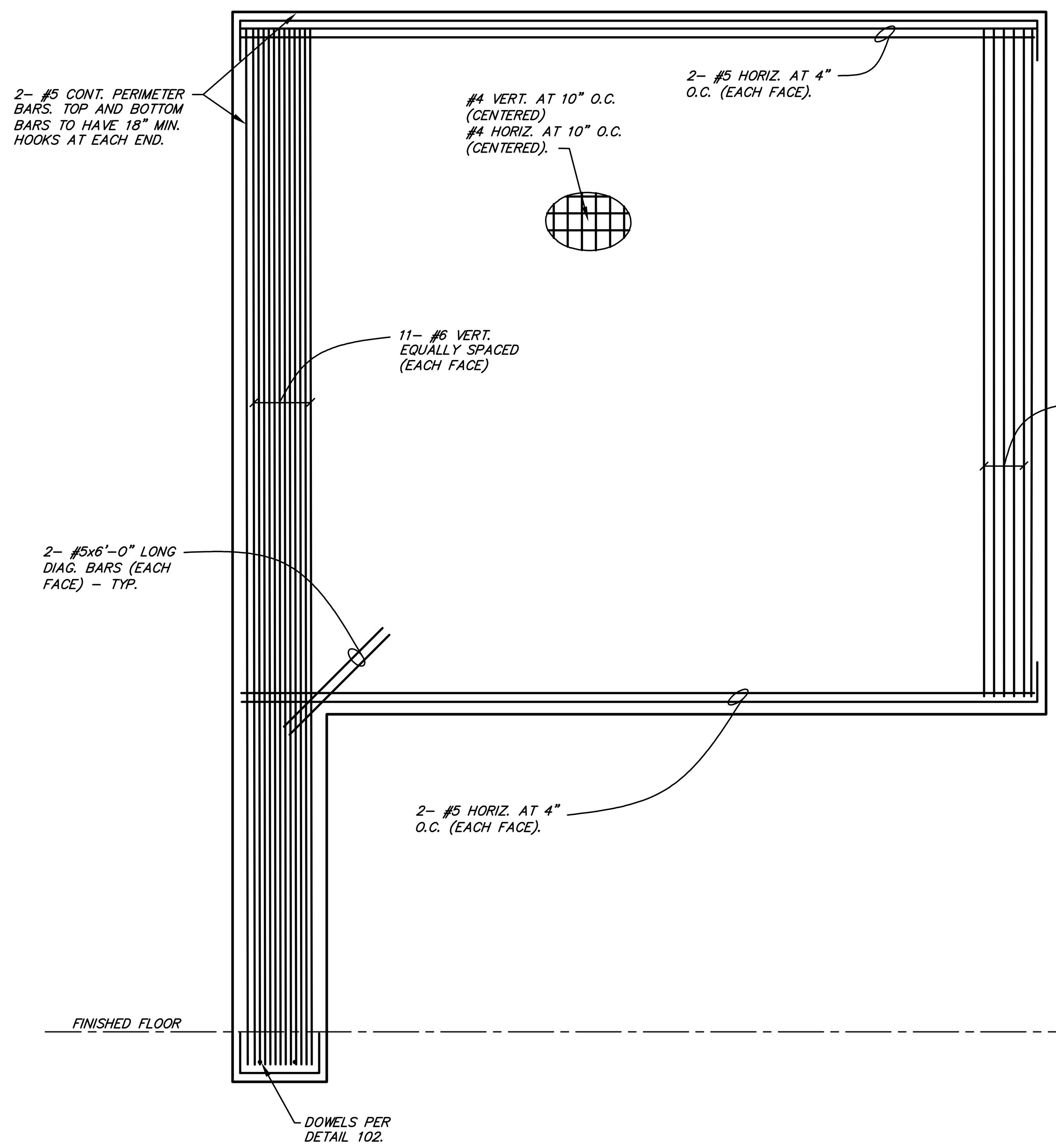

TYPE 11
(f'c = 6000psi) NO SCALE

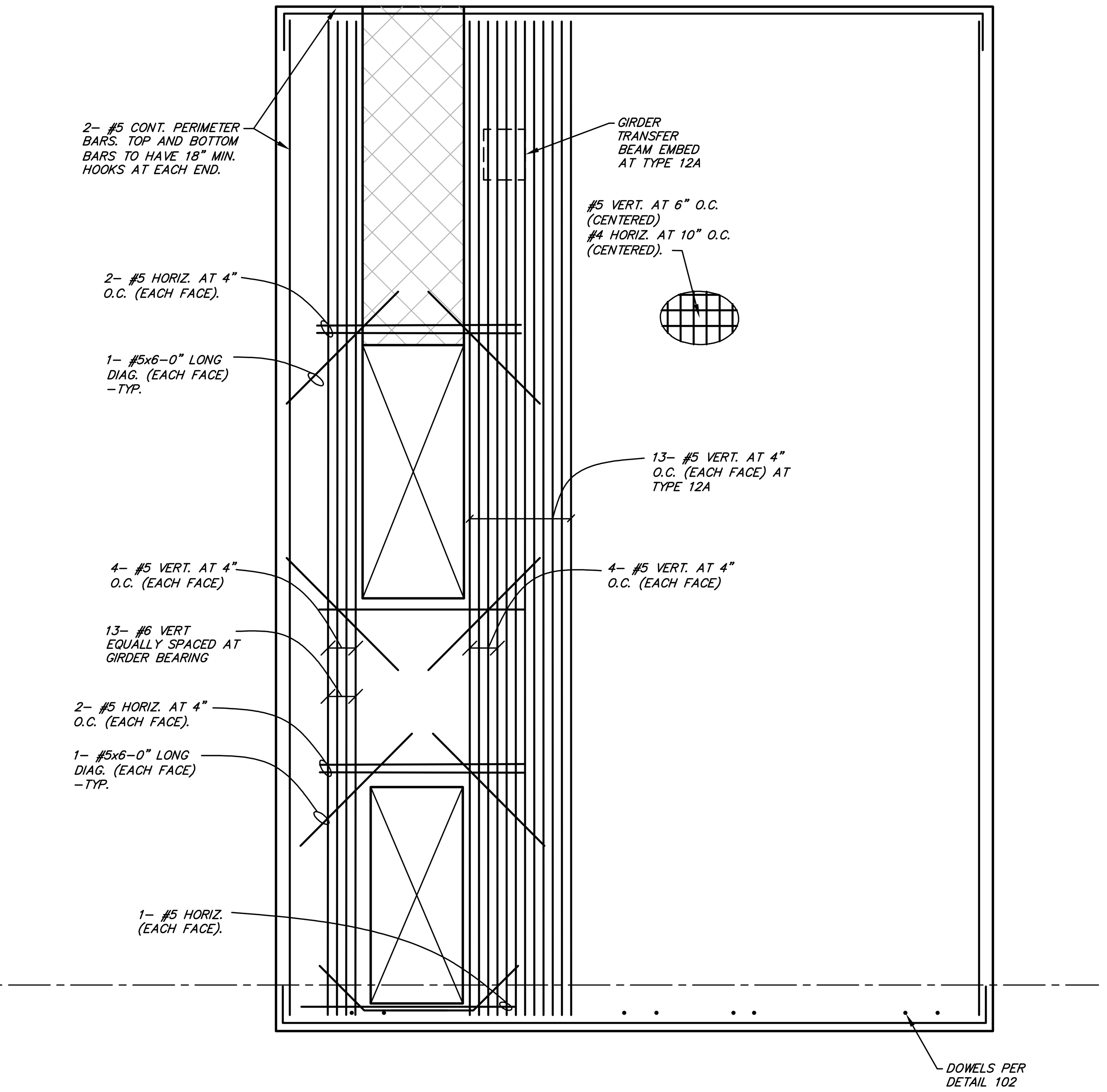

TYPE 12/12A
(f'c = 6000psi) NO SCALE

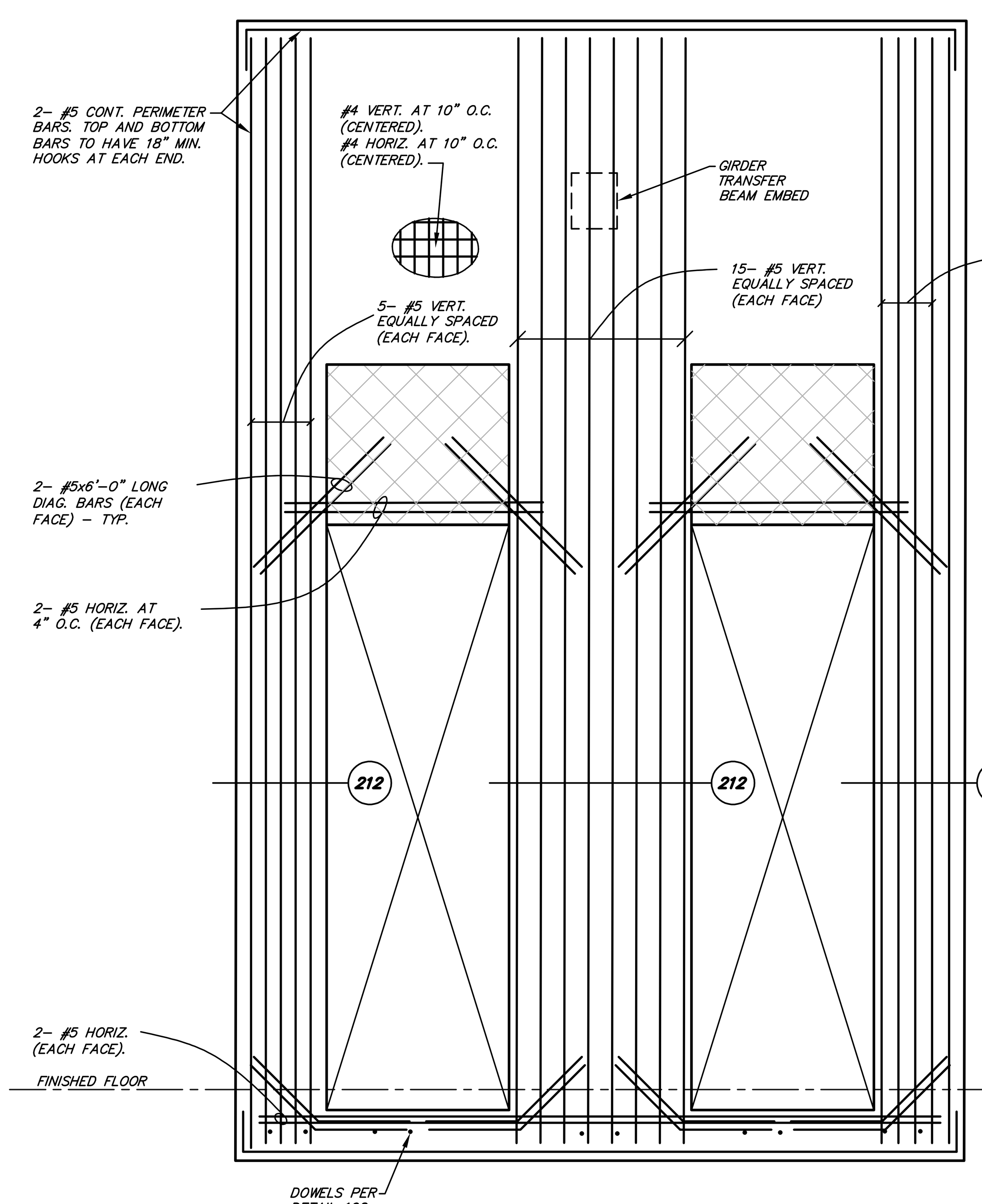

TYPE 13
(f'c = 6000psi) NO SCALE

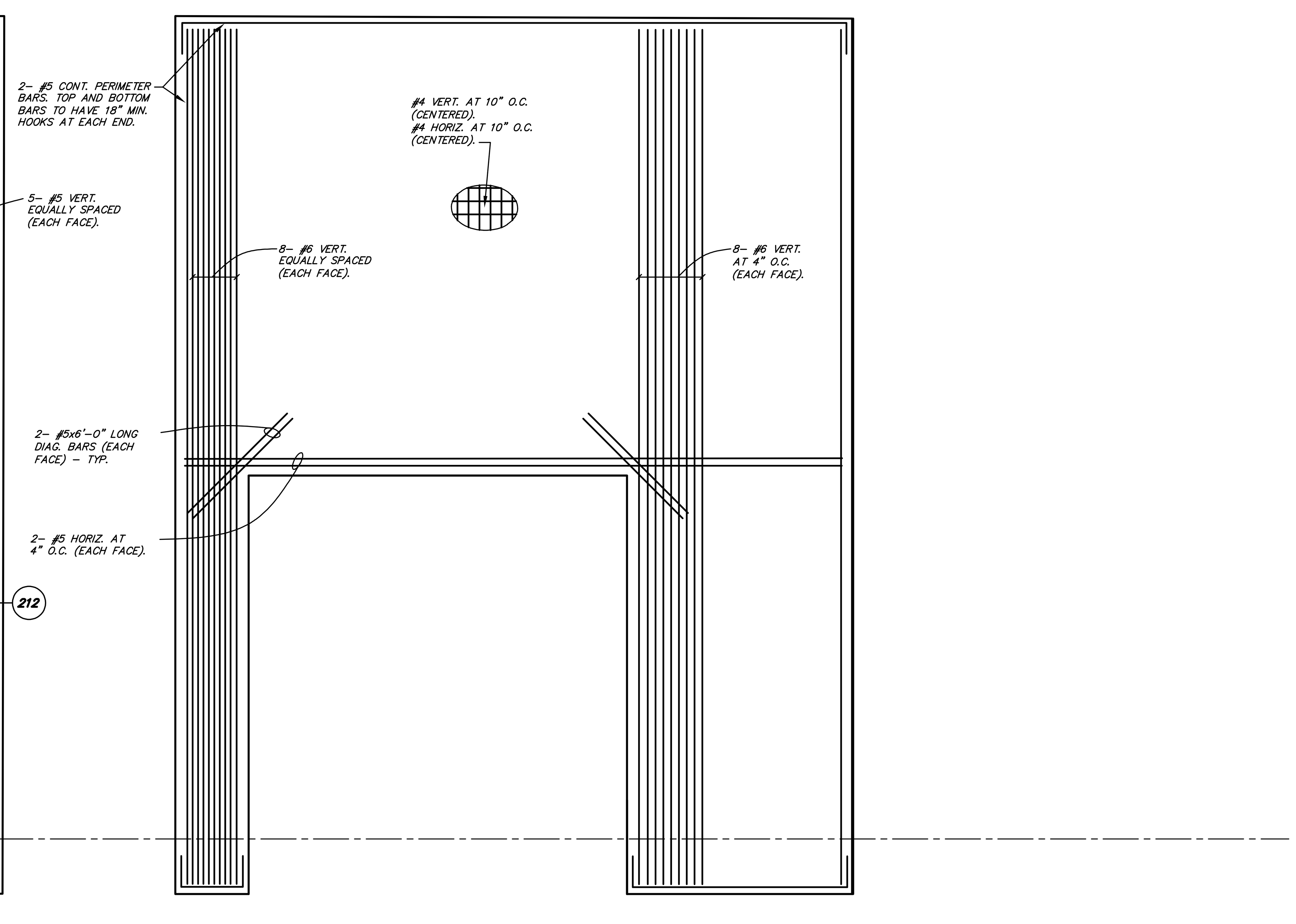

TYPE 14
(f'c = 6000psi) NO SCALE

TILT–UP CONCRETE PANEL NOTES:

NOTE:
SEE SHEETS S601 AND S602 FOR TYPICAL PANEL DETAILS.

1. PANEL ELEVATIONS ARE BY TYPE REFERENCE OR REINFORCING REQUIRED AND SHOWING ONLY PARTIAL LISTING OF EMBEDMENTS AND EXTREME CAUTION SHALL BE EXERCISED BY THE CONTRACTOR TO LAY OUT PANELS TO PROPER DIMENSIONS WITH REQUIRED REINFORCING, OPENINGS AND EMBEDMENTS REQUIRED FOR EACH PANEL.
2. ALL PANEL ELEVATIONS ARE AS VIEWED FROM THE INTERIOR SIDE OF THE BUILDING EXCEPT WHERE NOTED OTHERWISE. SEE ARCHITECTURAL EXTERIOR ELEVATIONS FOR LOCATIONS AND TYPES OF TEXTURES AND REVEALS.
3. DO NOT SCALE ANY PANEL ELEVATIONS SHOWN HEREIN. REFER TO PLANS AND PANEL ELEVATIONS FOR ALL DIMENSIONS. WHERE DIMENSIONS ARE SHOWN, IT IS INTENDED ONLY AS AN AID TO THE CONTRACTOR IN PROVIDING SHOP DRAWINGS. CONTRACTOR SHALL BE RESPONSIBLE FOR VERIFICATION OF ALL DIMENSIONS WITH ARCHITECTURAL DRAWINGS PRIOR TO START OF CONSTRUCTION. RESOLVE ANY DISCREPANCY WITH ARCHITECT.
4. DIMENSIONS FROM BUILDING FINISHED FLOORS TO BOTTOM OF PANEL TO BE GOVERNED BY THE APPROPRIATELY FLAGGED FOUNDATION DETAIL FOR EACH PARTICULAR LOCATION, USED IN CONJUNCTION WITH FINISHED GRADES ADJACENT TO BUILDINGS SHOWN ON CIVIL ENGINEERING DRAWINGS. VERIFY WITH FLAGGED DETAILS ON ARCHITECTURAL DRAWINGS.
5. ALL PANEL OPENINGS MAY NOT BE SHOWN ON THE ELEVATIONS. FOR EXACT SIZE, NUMBER AND LOCATION OF OPENINGS, SEE ARCHITECTURAL, MECHANICAL, PLUMBING AND ELECTRICAL DRAWINGS. RESOLVE ANY DISCREPANCY THRU THE ARCHITECT.
6. SEE PLANS, ELEVATIONS, SECTIONS, NOTES AND/OR DETAILS FOR ALL HEIGHTS, OPENINGS, EMBEDDED ITEMS, ETC.
7. PROVIDE 3/4" X 3/4" CHAMFERS AT ALL EXPOSED PANEL EDGES AND CORNERS, UNLESS NOTED OTHERWISE.
8. REINFORCING SHOWN IS FOR IN–PLACE CONDITION. CONTRACTOR SHALL BE RESPONSIBLE FOR PICK UP POINT INSERTS AND LOCATIONS, SPECIAL PICK UP REINFORCING AND STRONG BACKS, AND ALL PICK UP PLACING OPERATIONS.
9. ALL "TYPICAL REINFORCING" SHALL BE TYPICAL THRU–OUT PANEL WITH OTHER REINFORCING SHOWN IN ADDITION TO TYPICAL REINFORCING, UNLESS OTHERWISE NOTED.
10. ALL REINFORCING TO BE CENTERED IN DESIGN PANEL THICKNESS. ALL PERIMETER REINFORCING AND REINFORCING AT PERIMETERS OF OPENINGS IN PANELS TO BE 1 1/2" IN FROM EDGE.
11. ALL TOP AND BOTTOM PANEL PERIMETER BARS TO HAVE 18" HOOK AT EACH END. ALL OPENINGS SIDE PERIMETER BARS TO HAVE 6" HOOK AT BOTTOM. ALL HORIZONTAL REINFORCING AT TOP OF OPENINGS TO EXTEND 2'–0" BEYOND EACH OPENINGS, UNLESS OTHERWISE SHOWN. SEE TYPICAL OPENING IN PRECAST CONCRETE PANEL DETAIL FOR ADDITIONAL INFORMATION.
12. PANEL CHORD TIES, IF INDICATED SHALL BE LOCATED WITHIN 2'–0" BELOW TOP OF LEDGERS, UNLESS NOTED OTHERWISE.
13. FOR WELDING OF ASTM A706–GRADE 60 REINFORCING BARS, USE E90 SERIES LOW HYDROGEN RODS.
14. ALL PANEL JOINTS TO BE 3/4" AND SEALED WITH BUTYL ROD AND THIOKOL CAULKING ON INTERIOR AND EXTERIOR FACES, U.N.O. IN ARCHITECTURAL SPECIFICATIONS.
15. ALL PANELS REQUIRED TO HAVE A ONE HOUR FIRE RATING SHALL HAVE 1 1/2" MINIMUM CLEAR COVER TO REINFORCING IN LIEU OF 1" CLEAR WHICH IS TYPICALLY DETAILED ON THESE DRAWINGS. NOTIFY ENGINEER IMMEDIATELY IF CONFLICT EXISTS.

TYPICAL REINFORCING U.N.O.

BUILDING 1 OVERALL THICKNESS	9".
BUILDING 1 DESIGN THICKNESS	8 1/4"
VERTICAL BARS	SEE PANEL TYPES
HORIZONTAL BARS	SEE PANEL TYPES
PANEL PERIMETER BARS	2– #5
OPENING PERIMETER BARS	2– #5 U.N.O.

Butler Design Group Inc.
architects & planners
5013 East Washington St. #100
Phoenix, Arizona 85034
Phone 602-957-1800

PROFESSIONAL STRUCTURAL ENGINEER
No. 14160325
ROBERT HALLIDAY
STATE OF UTAH
2/25/26

OWNERSHIP OF INSTRUMENTS OF SERVICE
All reports, plans, specifications, computer files, field data, notes and other documents and instruments prepared by the design professional as instruments of service shall remain the property of the design professional. The design professional shall retain all common law, statutory and other reserved rights, including the copyright thereto.

PROPERTY RESERVE

PK Associates, L.L.C.
6900 E. Belleview Ave. #200
Greenwood Village, CO 80111
Phone: (720) 799-1058
Email: cadd@pkastructural.com
Website: www.pkastructural.com
Proj: 24295A

700 SOUTH
752 SOUTH 6200 WEST
SALT LAKE CITY, UTAH

Current Submittal: 100% CD SUBMITTAL
01/09/26

Revisions:

Project No.:	24295A
Issue Date:	02/25/2026
Drawn By:	PKA
Project Manager:	RH
Title:	PANEL TYPES

S305

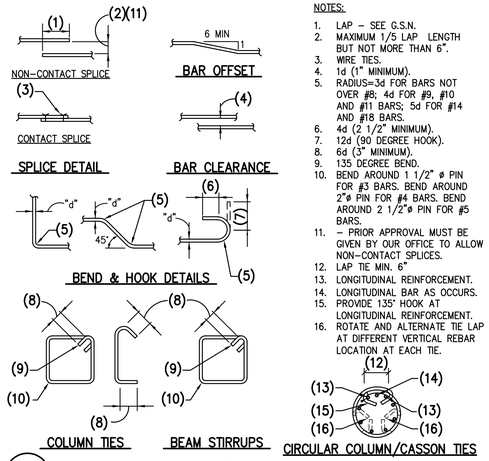

NOTES:

1. LAP – SEE G.S.N.
2. MAXIMUM 1/5 LAP LENGTH BUT NOT MORE THAN 6".
3. WIRE TIES.
4. 1d (1" MINIMUM).
5. RADIUS=3d FOR BARS NOT OVER #8; 4d FOR #9, #10 AND #11 BARS; 5d FOR #14 AND #18 BARS.
6. 4d (2 1/2" MINIMUM).
7. 12d (90 DEGREE HOOK).
8. 6d (3" MINIMUM).
9. 135 DEGREE BEND.
10. BEND AROUND 1 1/2" ø PIN FOR #3 BARS. BEND AROUND 2"ø PIN FOR #4 BARS. BEND AROUND 2 1/2"ø PIN FOR #5 BARS.
11. – PRIOR APPROVAL MUST BE GIVEN BY OUR OFFICE TO ALLOW NON–CONTACT SPLICES.
12. LAP TIE MIN. 6"
13. LONGITUDINAL REINFORCEMENT.
14. LONGITUDINAL BAR AS OCCURS.
15. PROVIDE 135° HOOK AT LONGITUDINAL REINFORCEMENT.
16. ROTATE AND ALTERNATE TIE LAP AT DIFFERENT VERTICAL REBAR LOCATION AT EACH TIE.

10 *TYPICAL CONCRETE REINFORCING BAR DETAILS*

NO SCALE

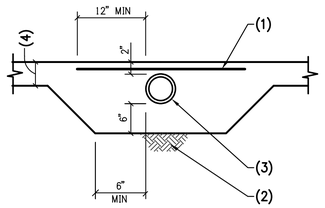

NOTES:

1. 4x4 – W1.4xW1.4 W.W.F. OR #4 AT 12" O.C.
2. FIRM UNDISTURBED SOIL OR COMPACTED BASE.
3. PIPE OR CONDUIT.
4. TYPICAL SLAB THICKNESS.

07 *SLEEVE FOR PIPE AT SLAB*

NO SCALE

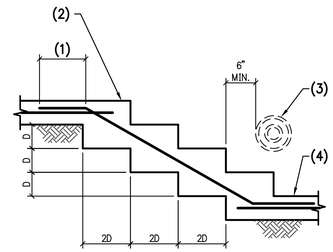

NOTES:

1. LAP PER G.S.N. (24" MIN.) – TYPICAL.
2. TOP OF WALL FOOTING.
3. PIPE THRU STEM WALL AS OCCURS – SEE TYPICAL DETAIL.
4. RETURN TO FOOTING THICKNESS AS SHOWN ON PLAN.

NOTE:

D = 2'–0" MAXIMUM.

04 *TYPICAL STEP IN CONCRETE FOOTING*

NO SCALE

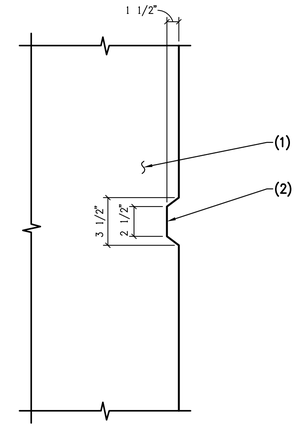

NOTES:

1. CONCRETE.
2. KEYED JOINT - REMOVE FORM MATERIAL PRIOR TO PLACING ADJACENT CONCRETE.

NOTE:

ALL DIMENSIONS ARE ± 1/2".

01 *TYPICAL KEY IN CONCRETE*

NO SCALE

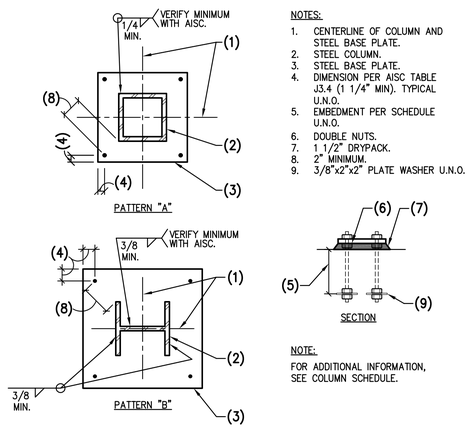

NOTES:

1. CENTERLINE OF COLUMN AND STEEL BASE PLATE.
2. STEEL COLUMN.
3. STEEL BASE PLATE.
4. DIMENSION PER AISC TABLE J3.4 (1 1/4" MIN). TYPICAL U.N.O.
5. EMBEDMENT PER SCHEDULE U.N.O.
6. DOUBLE NUTS.
7. 1 1/2" DRYPACK.
8. 2" MINIMUM.
9. 3/8"x2"x2" PLATE WASHER U.N.O.

NOTE:

FOR ADDITIONAL INFORMATION, SEE COLUMN SCHEDULE.

11 *PLAN VIEW – STEEL COLUMN AT STEEL BASE PLATE*

NO SCALE

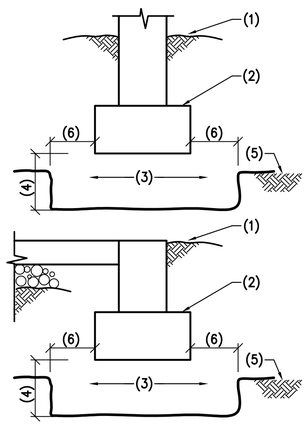

NOTES:

1. FINISHED GRADE.
2. CONCRETE FOOTING – FOR CONSTRUCTION ABOVE, SEE ADDITIONAL DETAILS.
3. ENGINEERED COMPACTED FILL PER SOIL REPORT.
4. 3'–0" MIN., MATCH SOILS REPORT.
5. EXISTING NATURAL GRADE.
6. 5'–0", MATCH SOILS REPORT.

NOTES:

1. FOR DEPTH OF FOOTING, SEE G.S.N.
2. SEE SOILS REPORT AND G.S.N. FOR LOCATIONS WHERE ENGINEERED FILL IS REQUIRED.

08 *TYPICAL SPREAD FOOTING ON ENGINEERED COMPACTED FILL*

NO SCALE

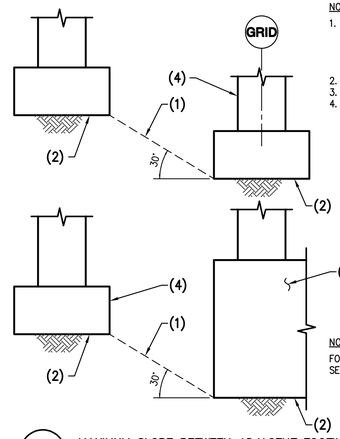

NOTES:

1. MAXIMUM SLOPE BETWEEN BOTTOM OF FOOTINGS SHALL BE 30 DEGREES. STEP FOOTINGS AS REQUIRED – SEE TYPICAL DETAIL.
2. BOTTOM OF FOUNDATION.
3. CONCRETE FOOTING.
4. WALL OR COLUMN AS OCCURS.

NOTE:

FOR ADDITIONAL INFORMATION, SEE PLANS AND DETAILS.

05 *MAXIMUM SLOPE BETWEEN ADJACENT FOOTING – TYP. U.N.O.*

NO SCALE

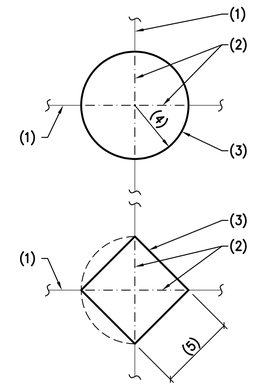

NOTES:

1. "CONC. C.J." WHERE SHOWN ON PLAN.
2. CENTERLINE OF COLUMN.
3. KEYED JOINT – SEE TYPICAL THICKENED SLAB AT CONCRETE CLOSURE POUR DETAIL.
4. RADIUS 1'–6" MIN. / 3'–0" MAX.
5. 2'–0" MIN. / 4'–0" MAX.

NOTE:

FOR CLARITY, COLUMNS OMITTED FOR CONFIGURATION OF SPECIFIC CLOSURE POURS, SEE PLAN.

02 *TYPICAL COLUMN CLOSURE POUR AT CONCRETE SLAB ON GRADE*

NO SCALE

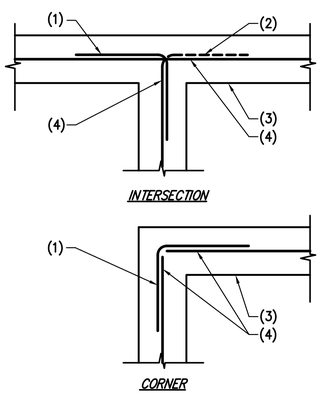

NOTES:

1. CORNER BARS SAME SIZE AND SPACING AS HORIZONTAL REINFORCING. LAP PER G.S.N. (24" MINIMUM).
2. ALTERNATE BEND.
3. CONCRETE STEM WALL OR FOOTING.
4. REINFORCING PER PLANS AND/OR G.S.N.

12 *PLAN – CORNER REINFORCING IN CONCRETE FOOTING AND/OR STEM WALL*

NO SCALE

BOLT DIAMETER	VERT BOLT EMBEDMENT LENGTH	HORIZ BOLT EMBEDMENT LENGTH	HEADED STUD FILLET WELD SIZE, "S".
1/2"	6"	4"	1/4"
5/8"	6"	4"	5/16"
3/4"	7"	5"	5/16"
7/8"	8"	6"	5/16"
1"	9"	7"	3/8"
1 1/8"	10"	8"	-----
1 1/4"	11"	9"	-----

NOTES:

PROVIDE ANCHORS, ANCHOR BOLTS AND EXPANSION BOLTS PER THIS SCHEDULE UNLESS NOTED OTHERWISE ON PLANS OR DETAILS.

THICKNESS OF DRYPACK DOES NOT APPLY TOWARDS EMBEDMENT.

SEE GENERAL STRUCTURAL NOTES FOR SPECIFICATIONS ON EXPANSION BOLTS AND EPOXY ANCHORS.

*WHERE ANCHORS ARE USED FOR TENSION/UPLIFT APPLICATION, EMBEDMENT DEPTH FROM TABLE SHALL BE INCREASED BY 1 1/2" TIMES

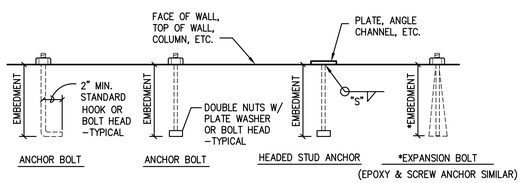

09 *TYPICAL ANCHOR, ANCHOR BOLT, AND EXPANSION BOLT SCHEDULE*

NO SCALE

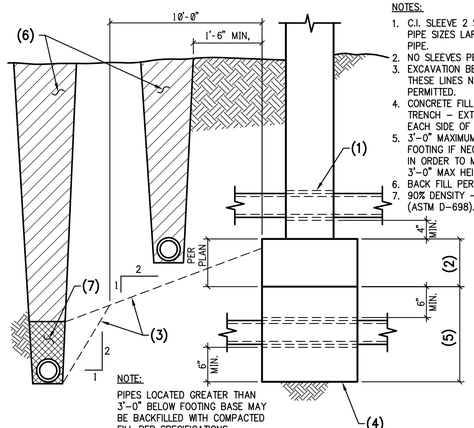

NOTES:

1. C.I. SLEEVE 2 STANDARD PIPE SIZES LARGER THAN PIPE.
2. NO SLEEVES PERMITTED.
3. EXCAVATION BELOW THESE LINES NOT PERMITTED.
4. CONCRETE FILL PIPE TRENCH – EXTEND 2'–0" EACH SIDE OF SLEEVE.
5. 3'–0" MAXIMUM – STEP FOOTING IF NECESSARY IN ORDER TO MAINTAIN 3'–0" MAX HEIGHT.
6. BACK FILL PER SPECS.
7. 90% DENSITY – (ASTM D–698).

NOTE:

PIPES LOCATED GREATER THAN 3'–0" BELOW FOOTING BASE MAY BE BACKFILLED WITH COMPACTED FILL PER SPECIFICATIONS

06 *PIPE THROUGH FOOTING AND TRENCH*

NO SCALE

	CLASS B TENSION SPLICE LENGTHS						COMP. BARS	
CONC. PSI	f'c = 2,500 PSI/ f'c = 3,000 PSI		f'c = 4,000 PSI		f'c = 5,000 PSI AND HIGHER		f'c = ALL	
BAR LOCATION	REGULAR CLASS	TOP CLASS	REGULAR CLASS	TOP CLASS	REGULAR CLASS	TOP CLASS	STD LAP	ENCLOSED W/ SPIRAL TIES
SIZE								
#3	24"	31"	19"	24"	17"	22"	12"	12"
#4	32"	41"	25"	33"	23"	29"	15"	12"
#5	39"	51"	31"	41"	28"	36"	19"	14"
#6	47"	61"	37"	49"	34"	43"	23"	17"
#7	69"	89"	54"	71"	49"	63"	26"	20"
#8	78"	102"	62"	81"	56"	72"	30"	23"
#9	88"	115"	70"	91"	63"	81"	34"	25"
#10	100"	129"	79"	102"	70"	92"	38"	29"
#11	110"	143"	87"	113"	78"	102"	42"	32"

NOTES:

1. TOP BARS ARE ANY HORIZONTAL BARS PLACED SO THAT MORE THAN 12" OF FRESH CONCRETE IS CAST IN THE MEMBER BELOW THE REINFORCEMENT.
2. UNLESS NOTED OTHERWISE, LAP SPLICES IN CONCRETE BEAMS, SLABS, AND WALLS WILL BE CLASS B TENSION SPLICE LENGTHS. COLUMNS SHALL HAVE STANDARD COMPRESSION LAP SPLICE.
3. CONTACT STRUCTURAL ENGINEER IF CENTER TO CENTER SPACING OF REINFORCING IS LESS THAN OR EQUAL TO 3 BAR DIAMETERS <3db OR 2db CLEAR SPACING BETWEEN BARS.
4. ALL SPLICES MUST BE FULL CONTACT.
5. SPLICES WITH #14 OR #18 BARS SHALL USE MECHANICAL COUPLERS. (THIS INCLUDES #14 OR #18 BARS TO SMALLER BARS SHOWN IN SCHEDULE).

03 *LAP SCHEDULE FOR REINFORCING STEEL*

NO SCALE

Butler Design Group Inc.
architects & planners
5013 East Washington St. #100
Phoenix, Arizona 85034
Phone 602-957-1800

PROFESSIONAL STRUCTURAL ENGINEER No. 14160325 ROBERT HALLIDAY STATE OF UTAH

OWNERSHIP OF INSTRUMENTS OF SERVICE
REPORTS, DRAWINGS, SPECIFICATIONS, COMPUTER FILES, FIELD DATA, notes and other documents and instruments prepared by the design professional as instruments of service shall remain the property of the design professional. The design professional shall retain all common law, statutory and other reserved rights, including the copyright thereto.

PROPERTY RESERVE

PK Associates, L.L.C.
6900 E. Belleview Ave. #200
Greenwood Village, CO 80111
Phone: (720) 799-1058
Email: cadd@pkastructural.com
Website: www.pkastructural.com
Proj: 24295A

700 SOUTH

752 SOUTH 6200 WEST
SALT LAKE CITY, UTAH

Current Submittal: 100% CD SUBMITTAL
01/09/26

Revisions:

Project No.:	24295A
Issue Date:	02/25/2026
Drawn By:	PKA
Project Manager:	RH
Title:	TYPICAL DETAILS

S401

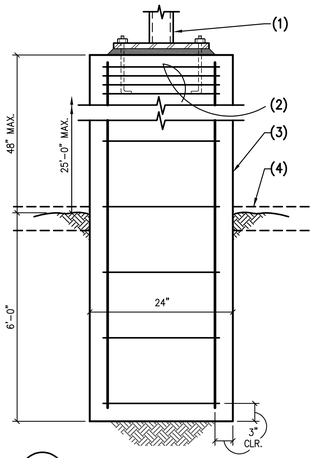

NOTES:
1. LIGHT POLE, BASEPLATE, AND ANCHOR BOLTS BY OTHERS.
2. 4– #3 TIES IN TOP 5".
3. CONCRETE BASE W/ 8– #5 VERTICALS AND #3 TIES AT 12" O.C., VERTICALLY (CONCRETE STRENGTH = 3000 PSI).
4. FINISHED GRADE OR CONCRETE SLAB AS OCCURS.

NOTE:
–REFER TO ARCH'L. FOR ADDITIONAL INFO.
–SOIL BEARING PRESSURE = 2500 PSF.
–COEFFICIENT OF FRICTION (WITH PASSIVE PRESSURE) = 0.35.
–PASSIVE PRESSURE = 300 PCF.

22 TYPICAL LIGHT POLE BASE DETAIL
NO SCALE

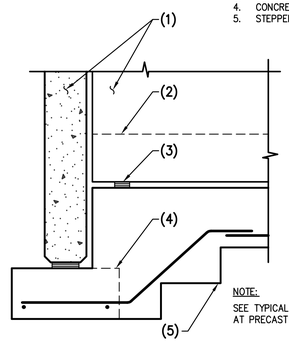

NOTES:
1. PRECAST CONCRETE PANEL.
2. FINISHED FLOOR LINE.
3. SETTING PAD AS REQUIRED.
4. CONCRETE FOOTING BEYOND.
5. STEPPED CONCRETE FOOTING.

NOTE:
SEE TYPICAL STEPPED FOOTING AT PRECAST PANEL DETAIL.

19 STEPPED FOOTING AT CORNER
NO SCALE

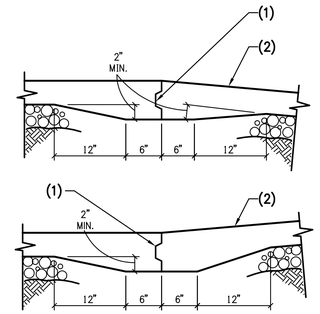

NOTES:
1. CONTINUOUS KEY – SEE TYPICAL KEY IN CONCRETE DETAIL.
2. CONCRETE SLAB ON GRADE.

16 TYPICAL RAMP AT CONCRETE SLAB ON GRADE
NO SCALE

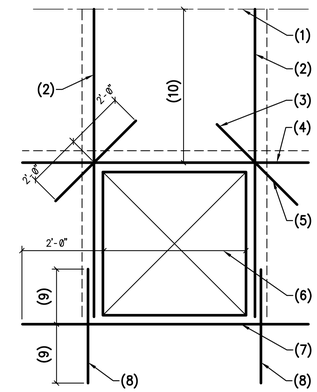

NOTES:
1. FLOOR OR ROOF LINE.
2. 1 VERT. E.F. TO MATCH SIZE OF TYPICAL WALL REINFORCING WHERE OPENING WIDTH IS GREATER THAN 4'–0" USE 2 VERT. E.F. SAME SIZE AS WALL REINFORCING.
3. WHERE 2'–0" CANNOT BE OBTAINED. EXTEND BAR AS FAR AS POSSIBLE AND HOOK OR BEND.
4. 2– #5 FOR OPENINGS 4'–0" WIDE OR LESS; 2– #6 FOR OPENINGS WIDER THAN 4'–0"; 4– #6 (2 ROWS OF 2 AT 4" O.C.) PER OPENINGS WIDER THAN 6'–0".
5. 2– #5 TYPICAL CORNER DIAGONAL BARS.
6. 8'–0" MAX. OPENING WIDTH– WHERE WIDTH OF OPENING EXCEEDS 2 TIMES WALL THICKNESS. JAMB BARS SHALL EXTEND FULL HEIGHT OF WALL.
7. 2– #5 UNLESS LARGER BARS ARE SHOWN ON PLANS OR DETAILS.
8. DOWELS ARE SAME SIZE AS JAMB BARS.
9. EMBED AND LAP PER G.S.N.
10. MINIMUM DIMENSION MUST BE GREATER THAN OPENING WIDTH. NOTIFY ENGINEER IF THIS CRITERIA IS NOT MET.

NOTES:
MAXIMUM OPEN WIDTH IS 8'–0" FOR THIS DETAIL. NOTIFY ENGINEER IF LARGER OPENING IS REQUIRED.

13 TYPICAL OPENING IN CONCRETE WALL
NO SCALE

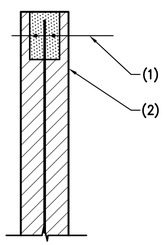

NOTES:
1. CONTINUOUS BOND BEAM PER G.S.N.
2. MASONRY WALL.

23 BOND BEAM IN MASONRY WALL PARAPET
NO SCALE

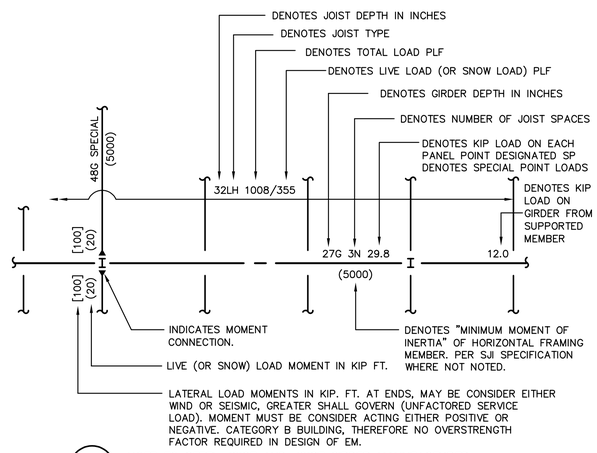

20 NOTE TO STEEL JOIST AND JOIST GIRDER MANUFACTURER
NO SCALE

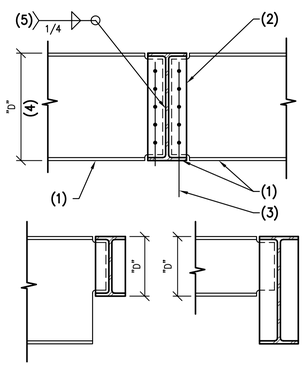

NOTES:
1. STEEL BEAM.
2. 3/8" STEEL SHEAR PLATE –USE 5/8" STEEL SHEAR PLATE WHERE "D" = 27" OR GREATER.
3. FOR SIZE, TYPE & NUMBER OF BOLTS, SEE TYPICAL BOLT SCHEDULE.
4. "D" = LESSER OF BEAM DEPTHS AS OCCURS.
5. WELD 3 SIDES TYPICAL – USE SAME CONNECTION AT STIFFENER PLATES WHEN REQUIRED.

NOTE:
AT ONE SIDED CONNECTIONS, INSTALL 3/8" STIFFENER PLATE OPPOSITE SHEAR PLATE.

17 TYPICAL CONNECTION WIDE FLANGE BEAM TO BEAM
NO SCALE

FRAMING NOTES:
1. THE TYPICAL STEEL BEAM TO STEEL COLUMN OR STEEL BEAM TO STEEL BEAM CONNECTION CONSISTS OF 3/8" SINGLE SHEAR PLATES WITH 3/4"ø, ASTM F3125 BOLTS. USE 5/8" SHEAR PLATES WHERE "D" = 27" OR GREATER.
2. ALL BOLTS SHALL BE INSTALLED USING SHORT SLOTTED HOLES IN EITHER THE BEAM WEB OR THE SHEAR PLATE PER LATEST AISC SPECIFICATIONS.

NOMINAL BEAM DEPTH "D"	NUMBER OF 3/4" DIA. ASTM, F3125 BOLTS
UP TO 7"	2
8" – 11"	2
12" – 14"	3
15" – 17"	4
18" – 20"	5
21" – 23"	6
24" – 29"	7
30" – 32"	8
33" – 35"	9
36"	10

14 BOLT SCHEDULE FOR TYPICAL STEEL CONNECTIONS
NO SCALE

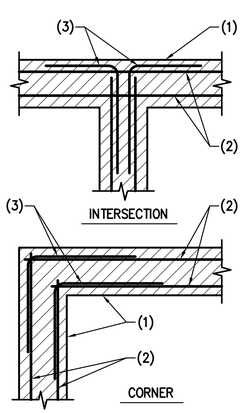

NOTES:
1. MASONRY WALL.
2. BOND BEAM REINFORCING.
3. CORNER BARS SAME SIZE AND SPACING AS HORIZONTAL REINFORCING – LAP PER G.S.N. (24" MINIMUM).

24 MASONRY BOND BEAM AT INTERSECTING WALLS
NO SCALE

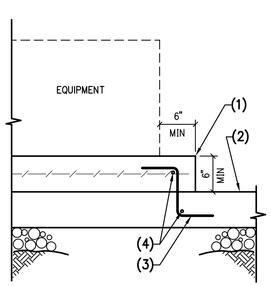

NOTES:
1. 6" CONCRETE PAD MIN. WITH 6x6–W2.1xW2.1 W.W.F. UNDER EQUIPMENT.
2. CONCRETE SLAB ON GRADE PER PLAN.
3. #4 Z–BARS WITH 12" HOOKS AT 18" O.C. MAX AROUND PERIMETER OF PAD – TYP.
4. 1– #4 CONT.

NOTE:
– EQUIPMENT TO WEIGH LESS THAN 100 PSF. IF IT WEIGHS MORE NOTIFY E.O.R.
– SEISMIC ATTACHMENT OF MECH. EQUIPMENT TO BE PROVIDED BY SUPPLIER.

1
21 TYPICAL CONCRETE EQUIPMENT PAD
NO SCALE

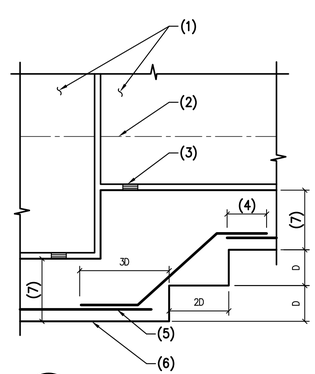

NOTES:
1. PRECAST CONCRETE PANEL.
2. FINISHED FLOOR LINE.
3. PANEL SETTING PADS.
4. LAP PER G.S.N. (24" MIN.) – TYPICAL.
5. FOOTING REINFORCING.
6. CONCRETE FOOTING.
7. RETURN TO FOOTING THICKNESS AS SHOWN ON PLAN.

NOTES:
D = 2'–0" MAXIMUM.

18 STEPPED WALL FOOTING AT PRECAST CONCRETE PANEL
NO SCALE

BAR SIZE	HOOKED EMBEDMENT			EXTENSION		STRAIGHT BAR EMBEDMENT		
	3000 PSI CONCRETE	4000 PSI CONCRETE	5000 PSI CONCRETE	90° HOOK	180° HOOK	5000 PSI	4000 PSI	3000 PSI
#3	6	6	6	4.5	2.5	13	14	16
#4	8	7	6	6.0	2.5	17	19	22
#5	10	8	7	7.5	2.5	21	24	27
#6	12	10	9	9.0	3.0	26	28	33
#7	13	12	10	10.5	3.5	37	42	48
#8	15	13	12	12.0	4.0	43	47	55
#9	17	15	13	13.5	4.5	48	54	62
#10	19	17	15	15.2	5.1	54	60	70
#11	22	19	17	16.9	5.6	60	67	77

NOTES:
1. EMBEDMENT LENGTH IS BASED ON 2 1/2" MINIMUM SIDE COVER AND 2" MINIMUM END COVER.
2. CONTACT STRUCTURAL ENGINEER IF CENTER TO CENTER SPACING OF REINFORCING IS LESS THAN OR EQUAL TO 3 BAR DIAMETERS <3db OR 2db CLEAR SPACING BETWEEN BARS.
3. WHERE CLEAR COVER <db, MULTIPLY EMBEDMENT AND STRAIGHT BAR DEVELOPMENT BY 1.5.

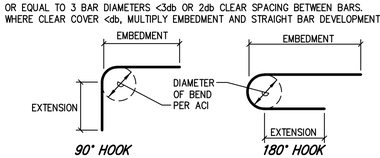

15 DOWEL DEVELOPMENT LENGTH IN TENSION (INCHES)
NO SCALE

Butler Design Group Inc.
architects & planners
5013 East Washington St. #100
Phoenix, Arizona 85034
Phone 602-957-1800

PROFESSIONAL STRUCTURAL ENGINEER No. 14160325 ROBERT HALLIDAY STATE OF UTAH 2/20/26

OWNERSHIP OF INSTRUMENTS OF SERVICE
REPORTS, PLANS, SPECIFICATIONS, COMPUTER FILES, FIELD DATA, notes and other documents and instruments prepared by the design professional as instruments of service shall remain the property of the design professional. The design professional shall retain all common law, statutory and other reserved rights, including the copyright thereto.

PROPERTY RESERVE

PK Associates, L.L.C.
6900 E. Belleview Ave. #200
Greenwood Village, CO 80111
Phone: (720) 799-1058
Email: cadd@pkastructural.com
Website: www.pkastructural.com
Proj: 24295A

700 SOUTH
752 SOUTH 6200 WEST
SALT LAKE CITY, UTAH

Current Submittal: 100% CD SUBMITTAL 01/09/26

Revisions:
1 CITY COMMENTS 05/20/26

Project No.: 24295A
Issue Date: 02/25/2026
Drawn By: PKA
Project Manager: RH
Title: TYPICAL DETAILS

S402

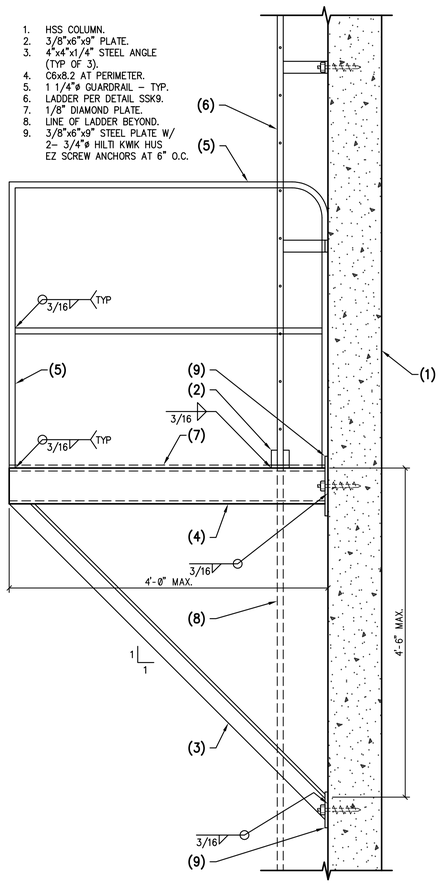

1. HSS COLUMN.
2. 3/8"x6"x9" PLATE.
3. 4"x4"x1/4" STEEL ANGLE (TYP OF 3).
4. C6x8.2 AT PERIMETER.
5. 1 1/4"ø GUARDRAIL – TYP.
6. LADDER PER DETAIL SSK9.
7. 1/8" DIAMOND PLATE.
8. LINE OF LADDER BEYOND.
9. 3/8"x6"x9" STEEL PLATE W/ 2– 3/4"ø HILTI KWIK HUS EZ SCREW ANCHORS AT 6" O.C.

33 STAIR PLATFORM AT CONCRETE TILT PANEL

NO SCALE

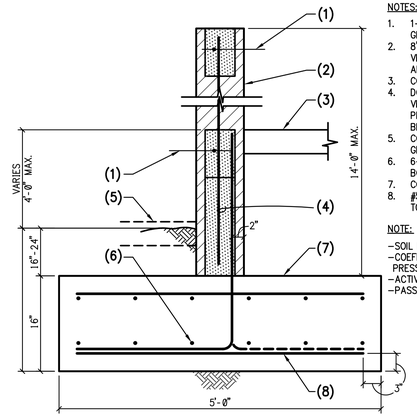

NOTES:
1. 1– #5 IN CONTINUOUS 8" DEEP GROUTED BOND BEAM.
2. 8" MASONRY WALL WITH #5 VERTICALS AT 8" O.C. GROUT ALL CELLS SOLID BELOW GRADE.
3. CONCRETE SLAB.
4. DOWELS TO MATCH AND LAP VERTICAL WALL REINFORCING PER G.S.N. – ALTERNATE BENDS.
5. CONCRETE SLAB OR FINISHED GRADE AS OCCURS.
6. 6– #5 CONTINUOUS TOP AND BOTTOM.
7. CONCRETE FOOTING.
8. #5 AT 12" O.C. TRANSVERSE TOP AND BOTTOM.

NOTE:
–SOIL BEARING PRESSURE = 1500 PSF.
–COEFFICIENT OF FRICTION (WITH PRESSURE) = 0.35.
–ACTIVE PRESSURE = 35 PCF.
–PASSIVE PRESSURE = 300 PCF.

30 MASONRY RETAINING WALL AT RAMP SLAB

NO SCALE

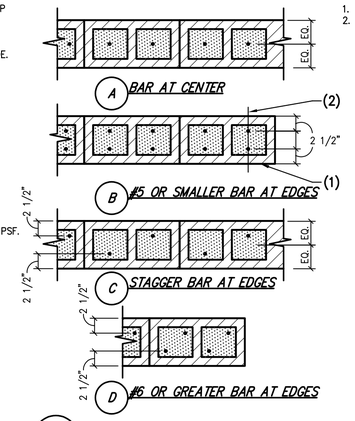

NOTES:
1. MASONRY WALL.
2. VERTICAL REINFORCING AS SHOWN ON PLANS.

28 PLAN VIEW – TYPICAL MASONRY WALL REINFORCING PLACEMENT

NO SCALE

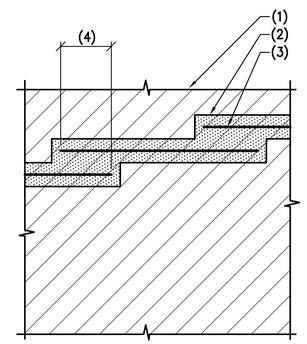

NOTES:
1. MASONRY WALL.
2. SOLID GROUTED BOND BEAM.
3. BOND BEAM REINFORCING.
4. LAP REINFORCING PER G.S.N. (24" MINIMUM).

25 STEPPED MASONRY WALL BOND BEAM

NO SCALE

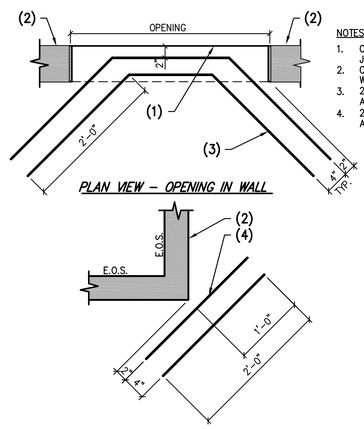

NOTES:
1. CONCRETE CONSTRUCTION JOINT OR EDGE OF SLAB.
2. CONCRETE OR MASONRY WALL.
3. 2– #3 CENTERED IN SLAB AT OPENINGS IN WALLS.
4. 2– #3 CENTERED IN SLAB AT ALL REENTRANT CORNERS.

31 TYPICAL – REQUIRED ADDITIONAL REINFORCEMENT AT CONCRETE SLAB ON GRADE (AT CONCRETE OR MASONRY WALLS)

NO SCALE

Bar size, number	E70 Electrodes
	Weld size, in.
4	1/4
5	5/16
6	3/8
7	7/16
8	1/2
9	9/16
10	5/8
11	11/16

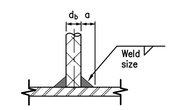

A SIZE OF FILLET WELD REQUIRED TO DEVELOP DESIGN STRENGTH OF BAR; BUTTED TO PLATE

Bar size, number \ Electrode material grade	E80 A706 OR E90 A615
	Minimum Splice Length, in.
4	3½
5	3½
6	4
7	4
8	5
9	6
10	8
11	10

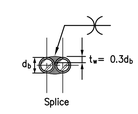

B MINIMUM SPLICE LENGTH OF WELD TO DEVELOP BAR STRENGTHS SHOWN; WELD PARALLEL TO BAR LENGTH

Bar size, number	E70 Electrodes
	Minimum length of weld, in.
4	3
5	4
6	4½
7	5
8	5
9	6
10	8
11	9

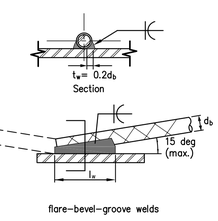

C MINIMUM LENGTH OF WELD TO DEVELOP DESIGN STRENGTH OF BAR; WELD PARALLEL TO BAR LENGTH

29 WELD DEVELOPMENT LENGTHS

NO SCALE

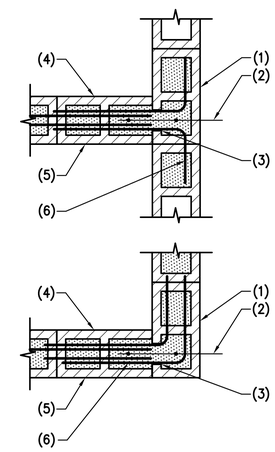

NOTES:
1. MASONRY WALL.
2. VERTICAL REINFORCING FULL HEIGHT.
3. BREAK OUT FACE SHELL AND GROUT SOLID – FULL HEIGHT OF WALLS.
4. OPEN END MASONRY UNIT.
5. MASONRY LINTEL.
6. DOWELS IN GROUTED BOND BEAM TO MATCH AND LAP LINTEL REINFORCING PER G.S.N. – 24" X 24" MIN. BEND AS REQUIRED.

26 PLAN VIEW – MASONRY WALL INTERSECTION AT MASONRY LINTEL

NO SCALE

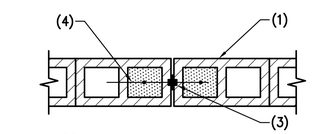

X PLAN

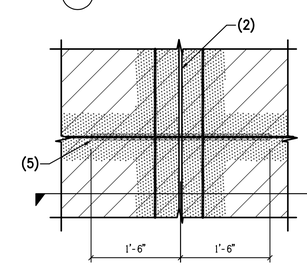

NOTES:
1. MASONRY WALL.
2. CONTROL JOINT.
3. CONTROL JOINT MATERIAL PER ARCHITECTURAL DRAWINGS AND SPECIFICATIONS.
4. 1 VERTICAL BAR EACH SIDE IN SOLID GROUTED CELLS TO MATCH VERTICAL WALL REINFORCING.
5. CONTINUOUS BOND BEAM BARS – WRAP BARS WITH MASTIC FOR BOND BREAK.

NOTE:
–BOND BEAM BARS SHALL NOT BE LAPPED WITHIN 8'–0" OF CONTROL JOINT.
–MAX C.J. SPACING = 24'–0" U.N.O.

27 CONTROL JOINT IN MASONRY WALL

NO SCALE

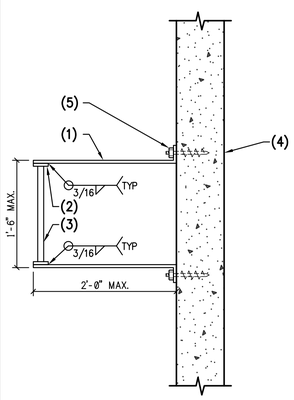

NOTES:
1. 2– 3/8"x3"xLENGTH PLATES. LOCATE AT 48" O.C. MAX.
2. 3/8"x2 1/2" SIDE RAIL.
3. 3/4"ø STEEL ROD RUNG.
4. CONCRETE TILT PANEL.
5. 3/4"ø HILTI KWIK HUS EZ SCREW ANCHOR, OR APPROVED EQUAL.

34 TYPICAL STEEL LADDER AT CONCRETE TILT PANEL

NO SCALE

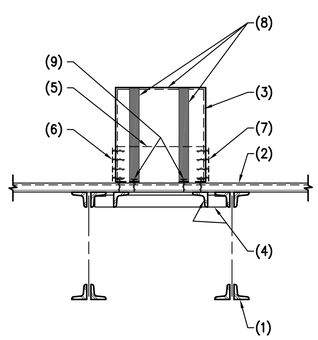

NOTES:
1. STEEL JOIST.
2. ROOF DECK.
3. LINE OF MECH'L UNIT BY OTHERS.
4. STEEL ANGLES FOR MECH'L UNIT SUPPORT PER DET. 103.
5. MECH'L UNIT CURB BY OTHERS.
6. HILTI TYPE DX X–EGN FASTENERS AT 8" O.C. AT CURB PERIMETER (ICC–ESR–1752).
7. 8– HILTI X–EGN FASTENERS AT EACH STRAP.
8. 2– 14 GA x2" WIDE STRAPS AT EACH UNIT IN EACH DIRECTION.
9. 4– HILTI X–EGN FASTENERS AT EACH STRAP.

32 HOLD DOWN STRAP AT MECHANICAL UNIT

NO SCALE

Butler Design Group Inc.
architects & planners
5013 East Washington St. #100
Phoenix, Arizona 85034
Phone 602-957-1800

PROFESSIONAL STRUCTURAL ENGINEER No. 14160325 ROBERT HALLIDAY STATE OF UTAH

OWNERSHIP OF INSTRUMENTS OF SERVICE
REPORTS, PLANS, SPECIFICATIONS, COMPUTER FILES, FIELD DATA, notes and other documents and instruments prepared by the design professional as instruments of service shall remain the property of the design professional. The design professional shall retain all common law, statutory and other reserved rights, including the copyright thereto.

PROPERTY RESERVE

PK Associates, L.L.C.
6900 E. Belleview Ave. #200
Greenwood Village, CO 80111
Phone: (720) 799-1058
Email: cadd@pkastructural.com
Website: www.pkastructural.com
Proj: 24295A

700 SOUTH

752 SOUTH 6200 WEST
SALT LAKE CITY, UTAH

Current Submittal: 100% CD SUBMITTAL
01/09/26

Revisions:

Project No.:	24295A
Issue Date:	02/25/2026
Drawn By:	PKA
Project Manager:	RH
Title:	TYPICAL DETAILS

S403

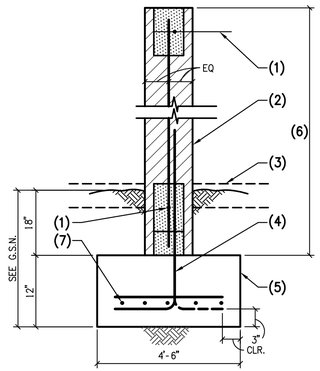

NOTES:

1. 1– #5 CONTINUOUS IN 8" DEEP GROUTED BOND BEAM.
2. 8" MASONRY WALL WITH 1– #4 VERTICALS AT 48" O.C. GROUT SOLID BELOW GRADE.
3. FINISHED GRADE OR CONCRETE SLAB WHERE OCCURS.
4. DOWELS TO MATCH AND LAP VERTICAL WALL REINFORCING PER G.S.N. – ALTERNATE BENDS.
5. CONCRETE FOOTING.
6. FOR TOP OF WALL, SEE ARCHITECTURAL DRAWINGS – 7'-6" MAX.
7. 5– #5 CONTINUOUS.
8. #5 AT 14" O.C.

NOTE:

–AT CONTRACTORS OPTION, USE CONCRETE STEM WALL WITH SAME REINFORCING.
–SOIL BEARING PRESSURE = 1500 PSF.
–COEFFICIENT OF FRICTION (WITH PASSIVE PRESSURE) = 0.3.
–ACTIVE PRESSURE = 35 PCF.
–PASSIVE PRESSURE = 150 PCF.

35 *6'–0" MAXIMUM FREE–STANDING MASONRY WALL AND FOOTING*

NO SCALE

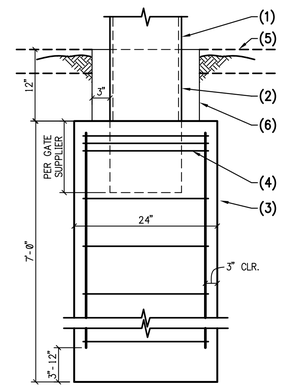

NOTES:

1. STEEL COLUMN PER GATE SUPPLIER.
2. CONCRETE POURBACK.
3. CONCRETE PIER.
4. 3– #3 TIES IN 5". 18"ø CONCRETE PIER W/ 6– #6 VERTICALS AND #4 TIES AT 12" O.C.
5. CONCRETE SLAB OR FINISHED GRADE AS OCCURS.

36 *ROLLING CONCRETE PIER*

NO SCALE

Butler Design Group Inc.
architects & planners

5013 East Washington St. #100
Phoenix, Arizona 85034
Phone 602-957-1800

PROFESSIONAL STRUCTURAL ENGINEER
No. 14160325
ROBERT HALLIDAY
STATE OF UTAH
2/25/26

OWNERSHIP OF INSTRUMENTS OF SERVICE
REPORTS, PLANS, SPECIFICATIONS, COMPUTER FILES, field data, notes and other documents and instruments prepared by the design professional as instruments of service shall remain the property of the design professional. The design professional shall retain all common law, statutory and other reserved rights, including the copyright thereto.

PROPERTY RESERVE

PK Associates, L.L.C.
6900 E. Belleview Ave. #200
Greenwood Village, CO 80111
Phone: (720) 799-1058
Email: cadd@pkastructural.com
Website: www.pkastructural.com
Proj: 24295A

700 SOUTH

752 SOUTH 6200 WEST
SALT LAKE CITY, UTAH

Current Submittal: 100% CD SUBMITTAL
01/09/26

Revisions:
1 CITY COMMENTS 05/20/26

Project No.:	24295A
Issue Date:	02/25/2026
Drawn By:	PKA
Project Manager:	RH
Title:	TYPICAL DETAILS

S404

Bdg
Butler Design Group Inc.
architects & planners
5013 East Washington St. #100
Phoenix, Arizona 85034
Phone 602-957-1800

PROFESSIONAL STRUCTURAL ENGINEER No. 14160325 ROBERT HALLIDAY STATE OF UTAH 2/25/26

OWNERSHIP OF INSTRUMENTS OF SERVICE
All reports, plans, specifications, computer files, field data, notes and other documents and instruments prepared by the design professional as instruments of service shall remain the property of the design professional. The design professional shall retain all common law, statutory and other reserved rights, including the copyright thereto.

PROPERTY RESERVE

PK Associates, L.L.C.
6900 E. Belleview Ave. #200
Greenwood Village, CO 80111
Phone: (720) 799-1058
Email: cadd@pkastructural.com
Website: www.pkastructural.com
Proj: 24295A

700 SOUTH
752 SOUTH 6200 WEST
SALT LAKE CITY, UTAH

Current Submittal: 100% CD SUBMITTAL 01/09/26

Revisions:

Project No.:	24295A
Issue Date:	02/25/2026
Drawn By:	PKA
Project Manager:	RH

Title: FOUNDATION DETAILS

S501

NOTES:
1. HSS COLUMN PER PLAN.
2. CONCRETE SLAB ON GRADE PER PLAN.
3. 5/8" PLATE (4 SIDES) – HOLD DOWN 1/4" FROM FINISHED FLOOR.
4. SEE TYPICAL DETAILS.
5. BASE PLATE AND ANCHOR RODS PER SCHEDULE.
6. ±1 1/2" DRYPACK.
7. 1/2" COMPRESSIBLE MATERIAL. ENSURE MATERIAL LAPS IN THE MIDDLE OF THE COLUMN SLEEVE AND IS NOT SLOPING AT CORNERS.
8. DRILL 1/4"ø DRAIN HOLE (ONE SIDE ONLY).
9. #3x1'-0" LONG AT ALL COLUMNS AT 2" FROM TOP OF SLAB. ENCLOSURE DOWELS DO NOT CROSS CONTROL JOINTS.
10. CONCRETE FOOTING.
11. GC TO PROVIDE 1/4" THICK COAL TAR (MASTIC) TO STEEL BELOW GRADE.
12. CAULK TOP JOINT PER PROJECT SPECIFICATIONS.

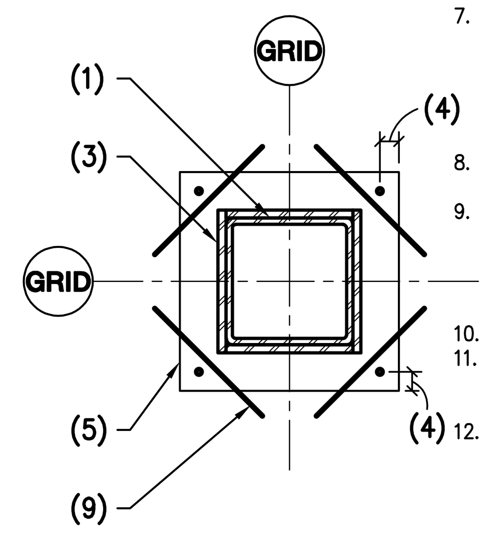

NOTES:
–FOR STANDARD SIZE HOLES, PROVIDE ASTM F844 (USS STANDARD) WASHERS. FOR HOLES THAT ARE MORE THAN 5/16" LARGER THAN ANCHOR ROD DIAMETER, PROVIDE PLATE WASHERS BETWEEN NUT AND PLATE PER TABLE 14–2 IN AISC STANDARD.
–FOR ANCHOR RODS 1" DIAMETER AND LARGER, PROVIDE PLATE WASHERS BETWEEN NUT AND PLATE PER TABLE 14–2 IN AISC STANDARD. WELD WASHER TO TOP OF BASE PLATE WITH 3/16" FILLET WELD.
–REFER TO DETAIL 106 FOR ADDITIONAL INFORMATION TO ISOLATE THE SLAB ON GRADE FROM THE COLUMN AND FOOTING.

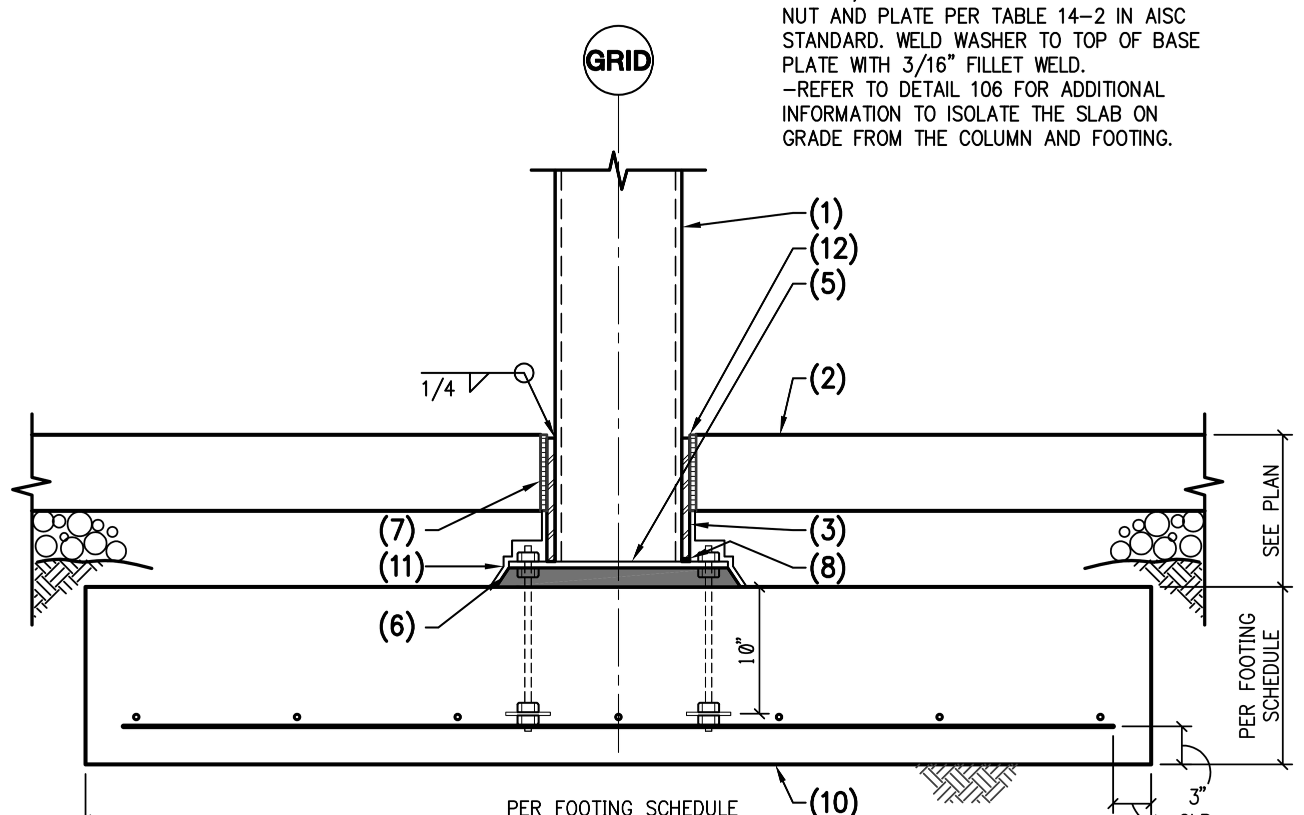

106 TYPICAL ANCHOR ROD AND BASE PLATE DETAIL WITH SLEEVE
NO SCALE

NOTES:
1. PRECAST CONCRETE PANEL.
2. CONCRETE GROUT.
3. STEP SLAB AS SHOWN OVER GROUT.
4. #5 DOWELS AT 24" O.C. MAX. EXCEPT AT DOCK HIGH PANELS USE #5 AT 12" O.C.
5. CONCRETE CLOSURE POUR – PROVIDE CONCRETE C.J. AT NOT MORE THAN (2.5 TIMES THE WIDTH OF THE POUR) O.C.
6. CONCRETE SLAB ON GRADE W/ REINF PER PLAN.
7. CONSTRUCTION JOINT – REFER TO DETAIL 101.
8. PROVIDE SLIP SHEET OVER CONCRETE CLOSURE AT DOWELS.

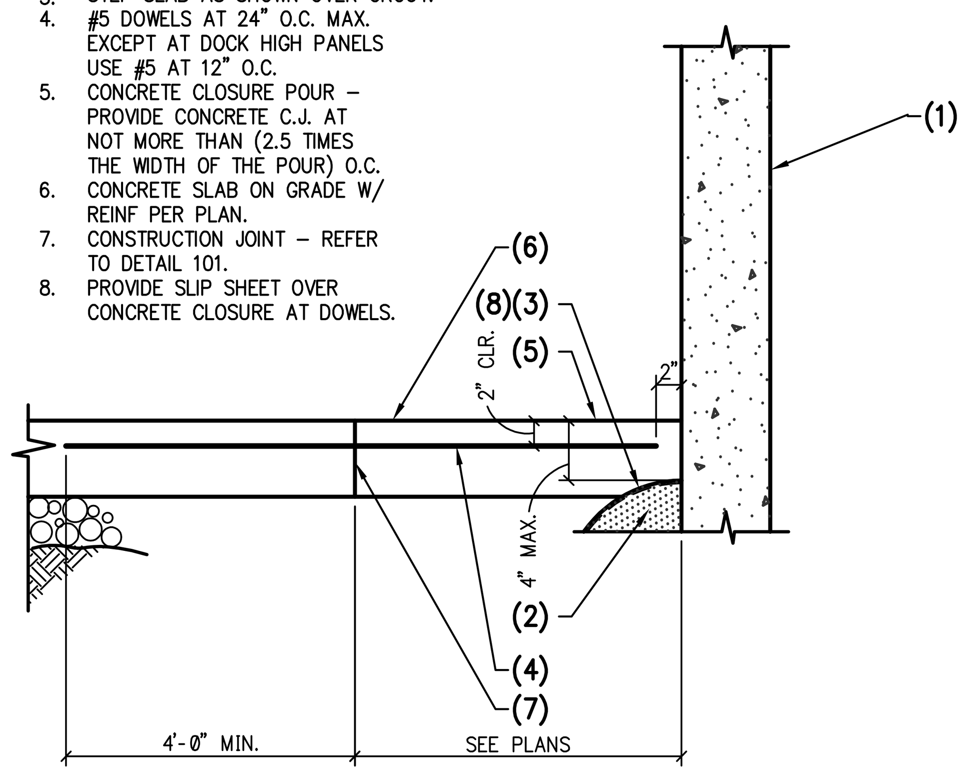

103 TYPICAL CONCRETE CLOSURE POUR AT PRECAST CONCRETE PANEL
NO SCALE

NOTES:
1. PRECAST CONCRETE PANEL.
2. FINISHED GRADE OR CONCRETE SLAB WHERE OCCURS.
3. SEE "TYPICAL PRECAST CONCRETE PANEL AT CONCRETE FOOTING" DETAIL (DETAIL 102).
4. CONCRETE FOOTING AND REINFORCING PER SCHEDULE.
5. CONCRETE CLOSURE POUR PER TYPICAL DETAIL 103.
6. REFER TO PANEL ELEV. FOR DIM – TYP. UNLESS NOTED OTHERWISE.

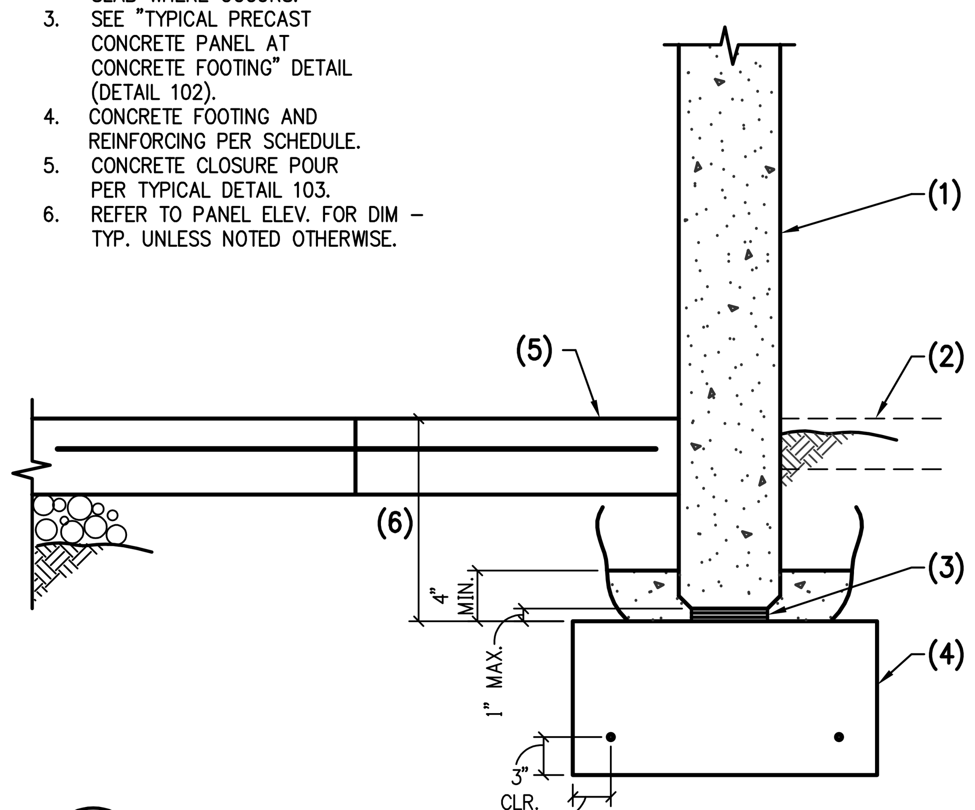

104 EXTERIOR PRECAST CONCRETE PANEL AT CONCRETE FOOTING
NO SCALE

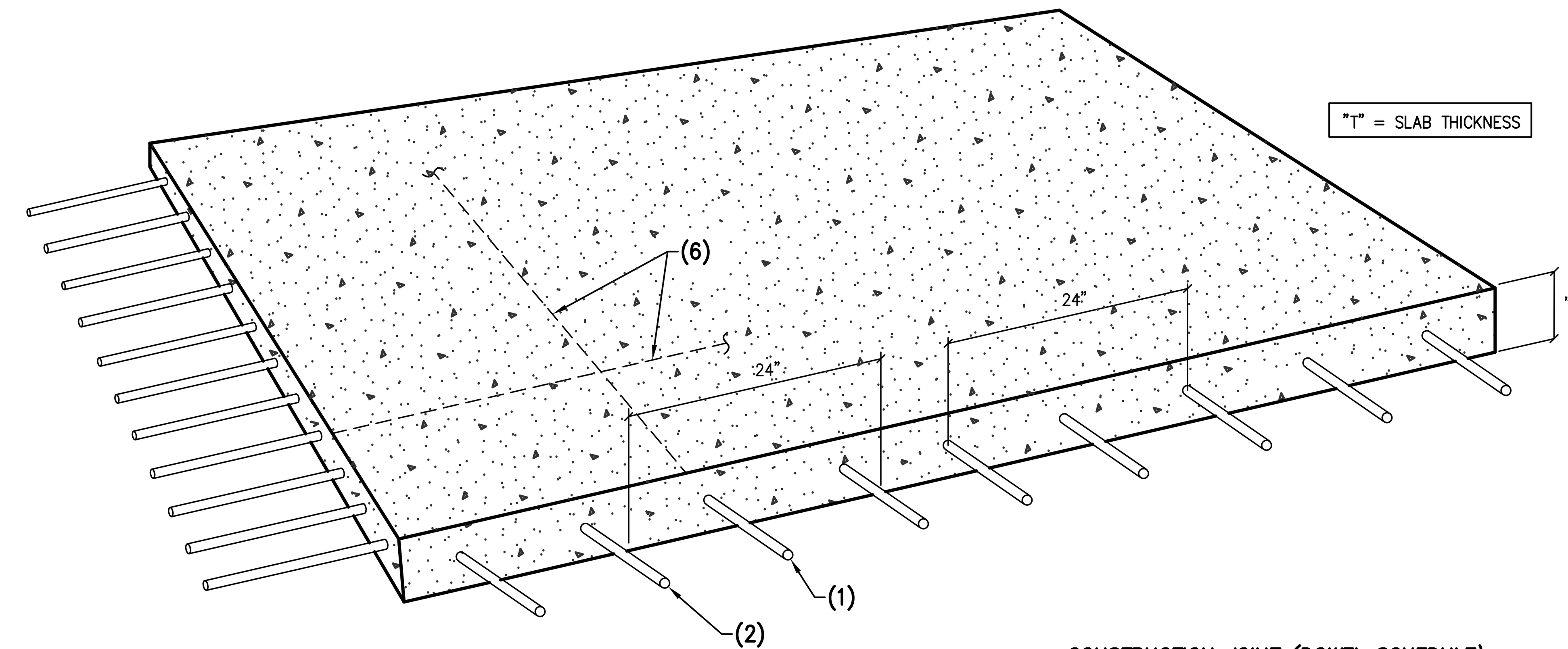

CONSTRUCTION JOINT (DOWEL SCHEDULE)

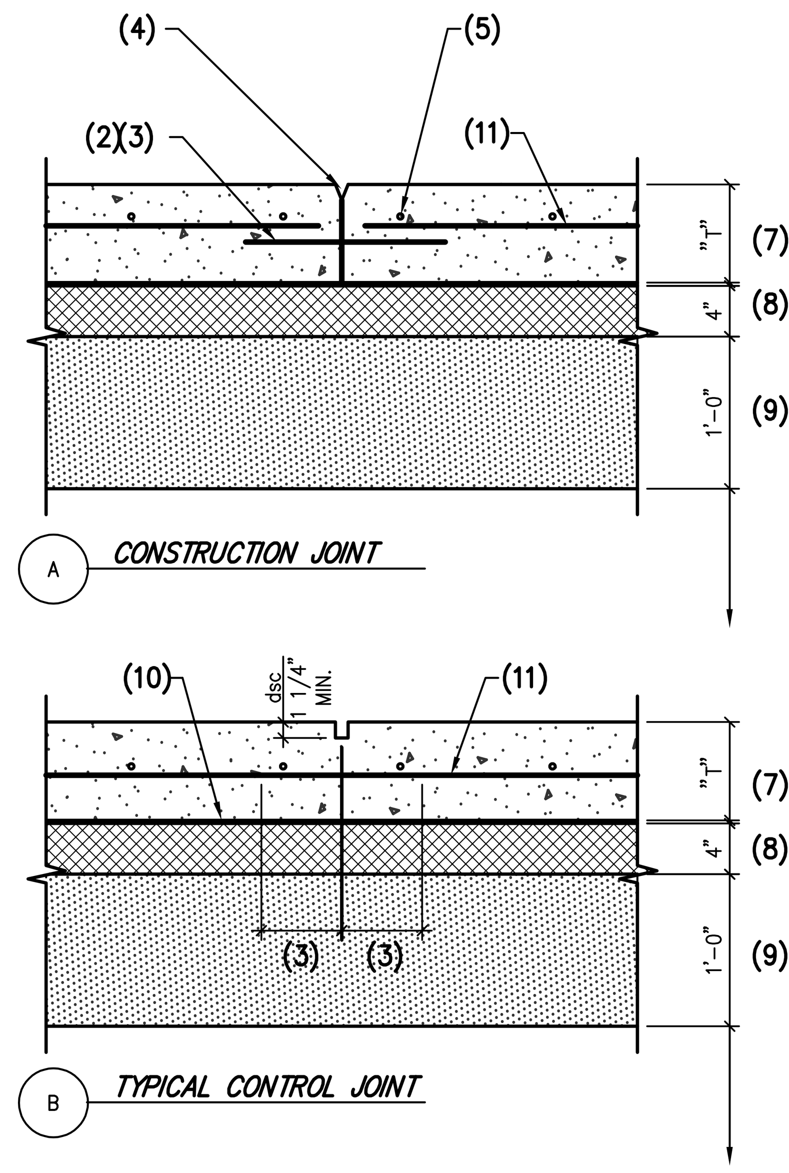

GENERAL DETAIL NOTES:
–CONTROL JOINTS TO BE PERPENDICULAR TO CONSTRUCTION JOINTS AND SPACING IN EACH DIRECTION BETWEEN JOINTS SHALL NOT EXCEED 15 FT. SEE GSN PLAN FOR TYPICAL JOINT SPACING.
–THIS ENGINEER RECOMMENDS FILLING ALL JOINTS WITH AN EPOXY JOINT FILLER IF HARD WHEEL EQUIPMENT IS TO BE USED.
–LAP SPLICE SHOULD BE LOCATED AWAY FROM ALL CONTROL JOINTS.
–WELDED WIRE REINFORCEMENT SHALL BE DEFORMED BARS CONFORMING TO ASTM A1064 (GRADE 80). WIRE SPLICES MINIMUM 13" TYP.
–COVER IS FROM TOP OF SLAB.
–dsc = DENOTES REQUIRED DEPTH OF SAWCUT. CUT SHALL BE MADE SOON ENOUGH TO PREVENT SHRINKAGE CRACKING, BUT NOT SO SOON AS TO CAUSE SPALLING OF THE CONCRETE WHILE SAWING. WORK MUST BE ACCOMPLISHED WITHIN 24 HOURS OF CONCRETE PLACEMENT.
–BACKFILL COMPACTED PER SOIL REPORT. (FILL MATERIAL AND COMPACTION CRITERIA).

SLAB THICKNESS	COVER	dsc
5"	2"	1 1/4"
6"	2 1/2"	1 1/2"
7"	2 3/4"	1 3/4"
8"	3"	2"

NOTES:
1. #3x36" AT 24" O.C.
2. 5/8"øx16" LONG SMOOTH DOWELS AT 24" O.C.
3. MAINTAIN 6" CLEAR FOR REBAR AT SAWCUTS.
4. 1/8" TOOLED EDGES EDGES, EDGES THE 2ND SLAB PLACEMENT EDGE WITH TIGHT RADIUS TOOL (APPROX 1/16" RADIUS). AFTER COMPLETION OF CURING, SAW CUT THE CONSTRUCTION JOINT 1" DEP, REMOVING RADIUS.
5. DOWELS TO BE HORIZONTAL AT CENTER OF SLAB.
6. CONTROL JOINTS AS OCCUR PER PLAN.
7. CONCRETE SLAB SEE FOUNDATION PLAN.
8. 4" PROPERLY COMPACTED CRUSH MISC. BASE(CMB) PER SOIL REPORT.
9. 12" MIN. COMPACTED (95%) PER SOIL REPORT. SEE SOILS REPORT FOR COMPACTION REQUIREMENT.
10. VAPOR BARRIER SEE ARCH'L WHERE OCCURS.
11. REINFORCING PER PLAN.

101 CONSTRUCTION AND CONTROL JOINTS
NO SCALE

NOTES:
1. PRECAST CONCRETE PANEL BEYOND.
2. PRECAST CONCRETE WALL.
3. CONCRETE LOADING DOCK.
4. CONCRETE FOOTING AND REINFORCING PER SCHEDULE.
5. CONCRETE SLAB ON GRADE.
6. SEE TYPICAL PRECAST CONCRETE PANEL AT FOOTING.
7. 1– #4xWIDTH OF OPENING.
8. 4'-0" MAXIMUM – SEE ARCHITECTURAL DRAWINGS.
9. CONT. STEEL CHANNEL C10x15.3 WITH 1/2"ø x4" H.S. AT 16" O.C.
10. 1/2" EXPANSION JOINT MATERIAL AND CAULK.
11. PRY BARS PER CONTRACTOR.
12. T.O. STEEL = -0'-0 1/2" B.F.F.
13. CHANNEL PER DETAIL 208.
14. 2– #4 (6" O.C. VERTICAL)x 6"| 36" EACH END.
15. PER TYP. DETAIL.

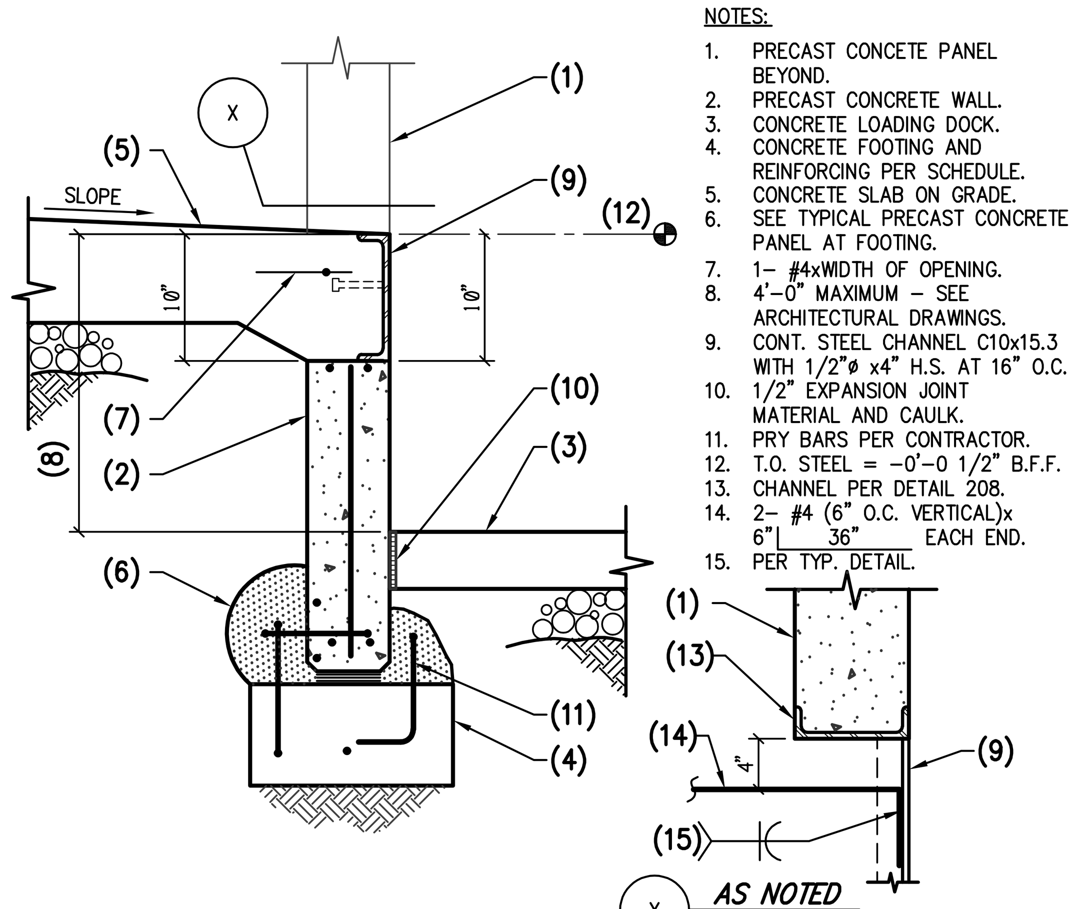

107 CONCRETE DOCK WALL
NO SCALE

NOTES:
1. PRECAST CONC. PANEL BEYOND.
2. TOOLED EDGE.
3. FINISHED GRADE OR CONCRETE SLAB WHERE OCCURS.
4. 1– #4 X WIDTH OF OPENING.
5. SEE "TYPICAL PRECAST CONC. PANEL AT CONC. FOOTING" DET. 102
6. CONCRETE FOOTING AND REINFORCING PER SCHEDULE.
7. DOWELS PER TYP. PRECAST CONCRETE PANEL AT FOOTING DETAIL.
8. 3/4"x16" LONG SMOOTH DOWEL AT 16" O.C. WHERE EXTERIOR CONCRETE SLAB OCCURS.

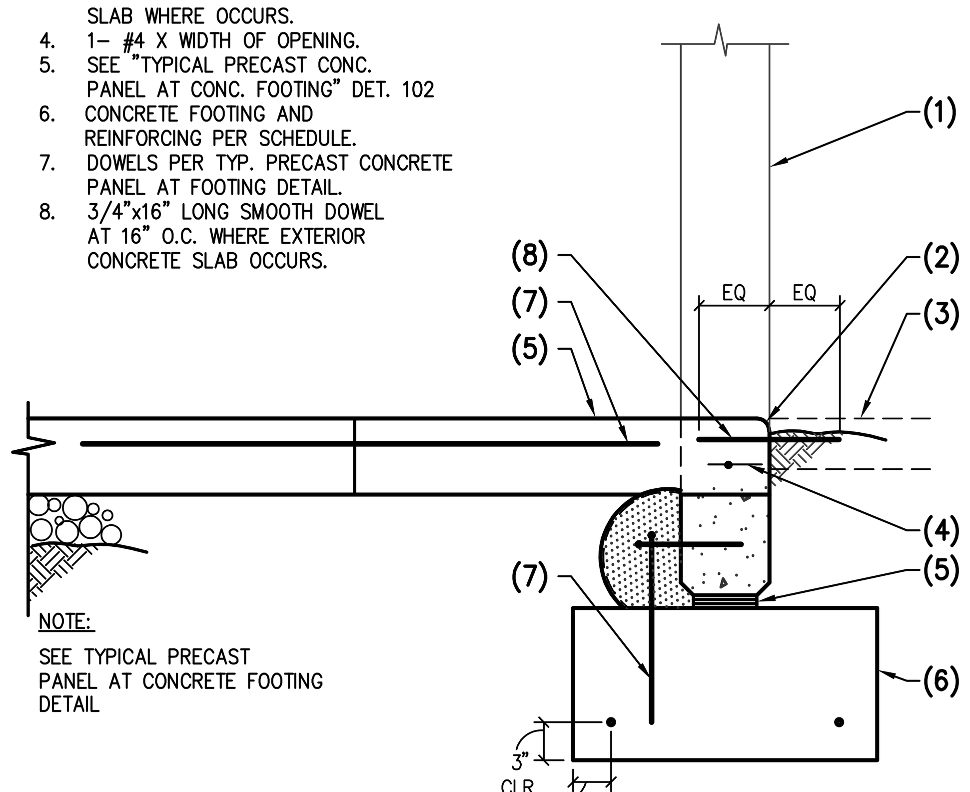

NOTE:
SEE TYPICAL PRECAST PANEL AT CONCRETE FOOTING DETAIL

105 OPENING AT EXTERIOR PRECAST CONCRETE PANEL AT FOOTING
NO SCALE

NOTES:
1. PRECAST CONCRETE PANEL.
2. MINIMUM 5,000 PSI CONCRETE WET GROUT – VIBRATE TO ENSURE FULL GROUTING UNDER PANEL AND AROUND DOWELS AS SHOWN.
3. LINE OF GROUT FLOW AROUND PANEL BEYOND. SEE EXTERIOR PANEL AT CONCRETE FOOTING DET.
4. SHIMS AS REQUIRED AT EACH END OF PANEL– LOCATE 24" FROM PANELS JOINT – INSTALL ADD'L. INTERMEDIATE PLATE (3 PER PANEL) FOR PANELS WEIGHING OVER 90,000#.
5. CONCRETE FOOTING.
6. C.L. OF PANEL AND FOOTING – TYP. U.N.O.
7. REFR TO PANEL ELEV. FOR DIM – TYP. U.N.O.
8. FINISHED FLOOR.
9. #4 DOWELS X [8" / 6" / 6" / 8"] SPACED AT 5'-0" O.C. MAX. (MIN. 2 PER PANEL JAMB).
10. 3" MIN. CONCRETE COVER AROUND ALL STEEL BELOW GRADE.
11. CONCRETE SLAB OR FINISHED GRADE AS OCCURS.
12. #4 DOWELS SPACED PER NOTE 9 DOWELS.
13. PROVIDE SLIP SHEET OVER CONCRETE CLOSURE AT DOWELS.
14. PRY BARS PER CONTRACTOR.

NOTE:
–SHIMS TO BE 12" LONG x PANEL WIDTH MINUS 1".
–DOWELS IN NOTE #9 AND #12 DO NOT HAVE TO ALIGN.

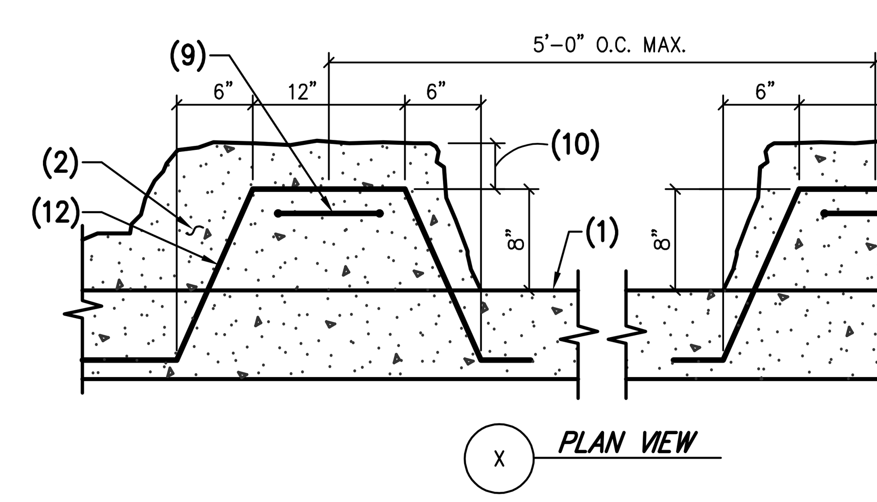

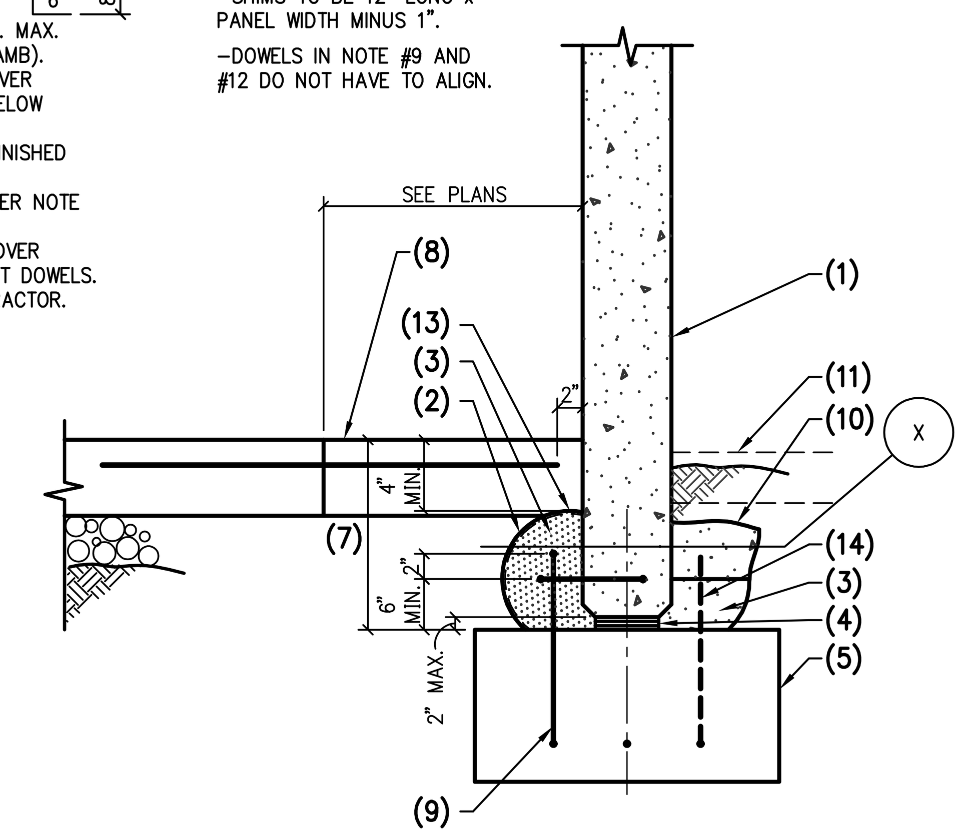

102 TYPICAL PRECAST CONCRETE PANEL AT CONCRETE FOOTING
NO SCALE

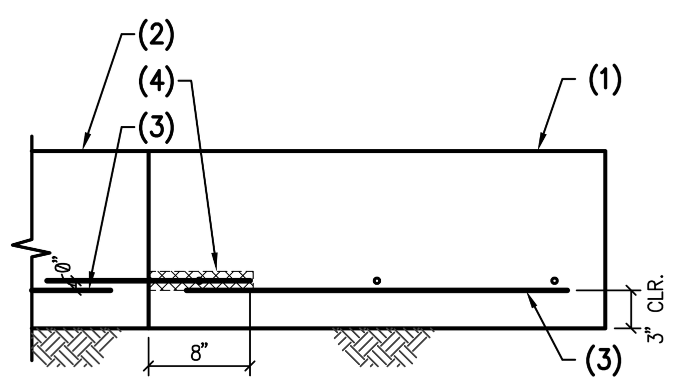

NOTES:

1. BUILDING FOOTING.
2. RAMP FOOTING.
3. REINFORCING PER PLAN.
4. REINFORCING TO MATCH AND LAP WITH RAMP REBAR. EPOXY PER GSN.

NOTE:

WALLS NOT SHOWN FOR CLARITY.

117 RAMP FOOTING AT BUILDING FOOTING

NO SCALE

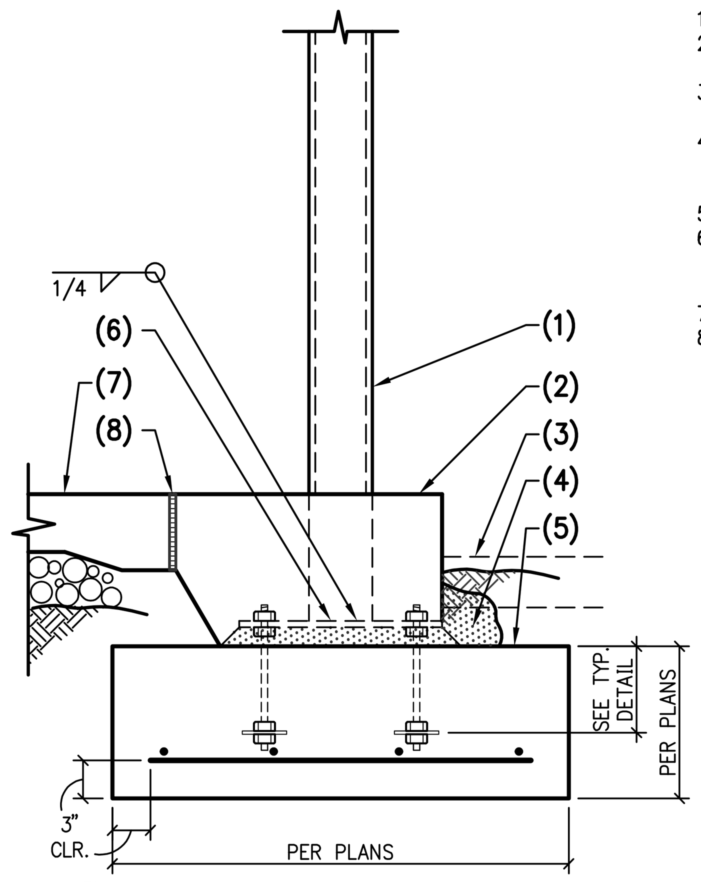

NOTES:

1. STEEL COLUMN.
2. CONCRETE CLOSURE POUR PER TYPICAL DETAIL.
3. FINISHED GRADE OR CONCRETE SLAB AS OCCURS.
4. 3" MINIMUM CONCRETE COVER AROUND ALL STEEL BELOW GRADE.
5. CONCRETE FOOTING.
6. STEEL BASE PLATE WITH DOUBLE NUTS OVER 1 1/2" ± DRYPACK.
7. CONCRETE SLAB ON GRADE.
8. 1/4" CONTINUOUS SHEET FLEX FOAM.

114 EXTERIOR STEEL COLUMN FOOTING

NO SCALE

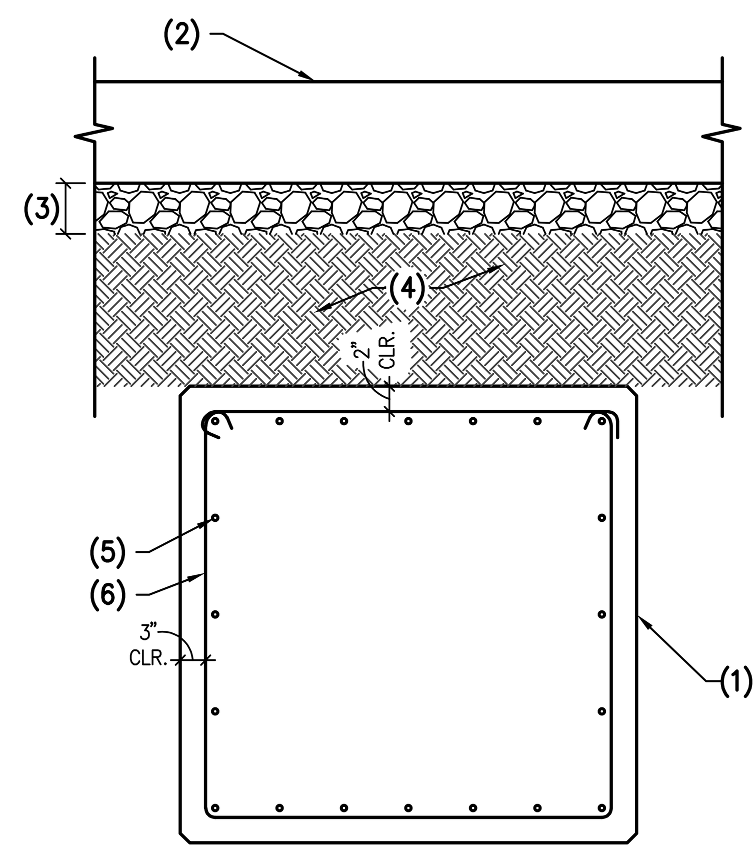

NOTES:

1. CONCRETE GRADE BEAM PER PLAN.
2. CONCRETE SLAB ON GRADE.
3. A.B.C. PER PLANS.
4. SUBGRADE PER GEOTECH REPORT.
5. REINFORCEMENTS PER SCHEDULE.
6. TIES PER SCHEDULE.

111 CONCRETE GRADE BEAM CROSS SECTION

NO SCALE

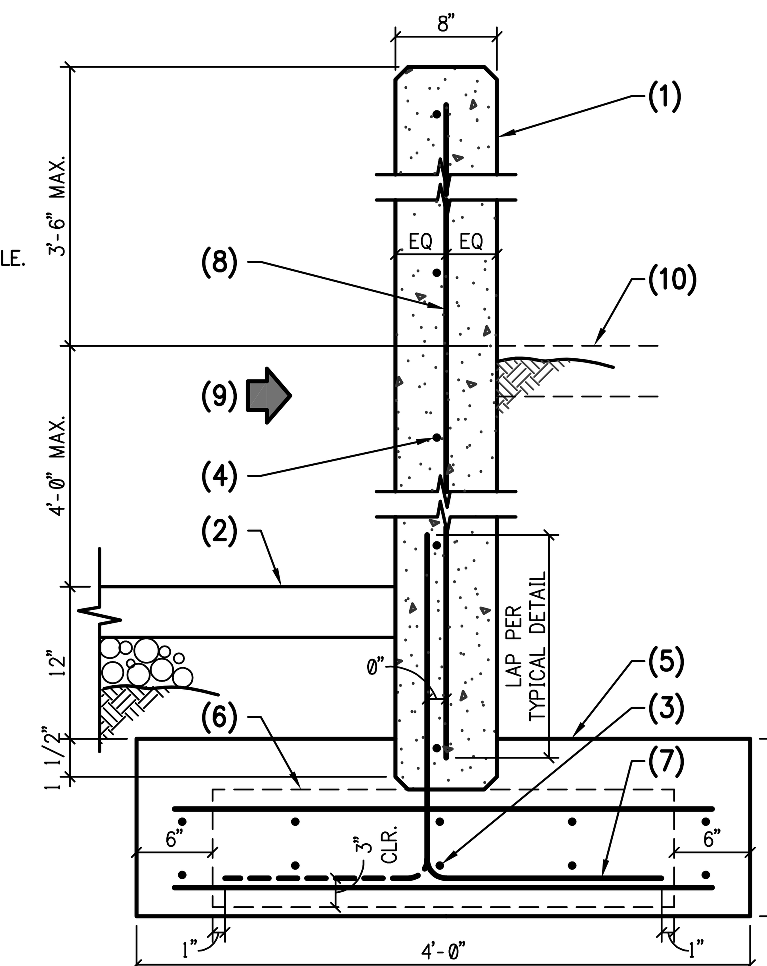

NOTES:

1. PRECAST CONCRETE PANEL.
2. CONCRETE SLAB ON GRADE.
3. PROVIDE 1- #5 AT HOOK.
4. #5 HORIZONTAL AT 12" O.C.
5. CONT. CONCRETE FOOTING. 5- #5 CONT. AND #5 AT 10" O.C. TRANSVERSE. TOP AND BOTTOM.
6. CONCRETE SETTING PAD BEYOND. PAD SHALL BE SET BETWEEN FOOTING TRANSVERSE BARS.
7. DOWELS TO MATCH AND LAP VERTICAL WALL REINFORCING PER G.S.N.
8. #5 AT 12" O.C. VERTICALS.
9. PROVIDE SUPPORT UNTIL SLAB REACHES DESIGN STRENGTH.
10. FINISHED GRADE OR CONCRETE SLAB WHERE OCCURS.

108 CIP CONCRETE PANEL AT RAMP

NO SCALE

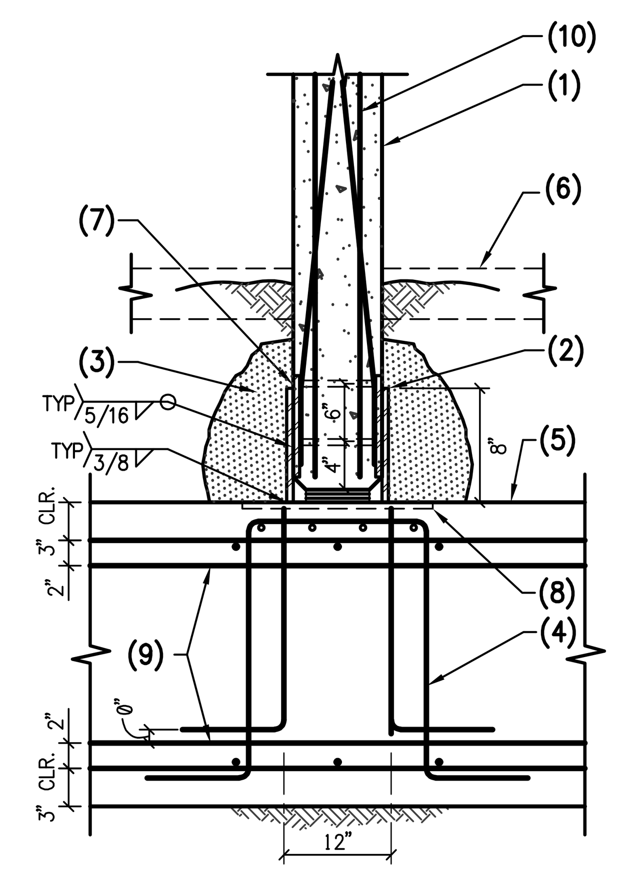

NOTES:

1. CONCRETE TILT PANEL.
2. STEEL PLATE 1/2"x8"x10".
3. MAINTAIN 3" MIN. COVERAGE AROUND ALL STEEL BELOW GRADE.
4. 4- #4 HOOKED BARS AROUND ANCHORS EACH WAY.
5. CONCRETE FOOTING.
6. CONCRETE SLAB ON GRADE OR FINISHED GRADE AS OCCURS.
7. STEEL PLATES 1"x16"x16" W/ 4-3/4"ø RODS AT 6" O.C. AND 2- #7 VERTICALS AT 7" O.C. DOWEL TO PLATE 1/4 5 6" 42" 3"
8. STEEL PLATE 1"x16"x16" WITH 6- #8 A706 WELDABLE REBAR W/ S+D HOOK.
9. 20- #8x20'-0" TOP AND BOTTOM.
10. PROVIDE ADD'L #6 VERTICALS EACH FACE AT 6" O.C.

118 HOLD DOWNS AT CONCRETE TILT PANEL

NO SCALE

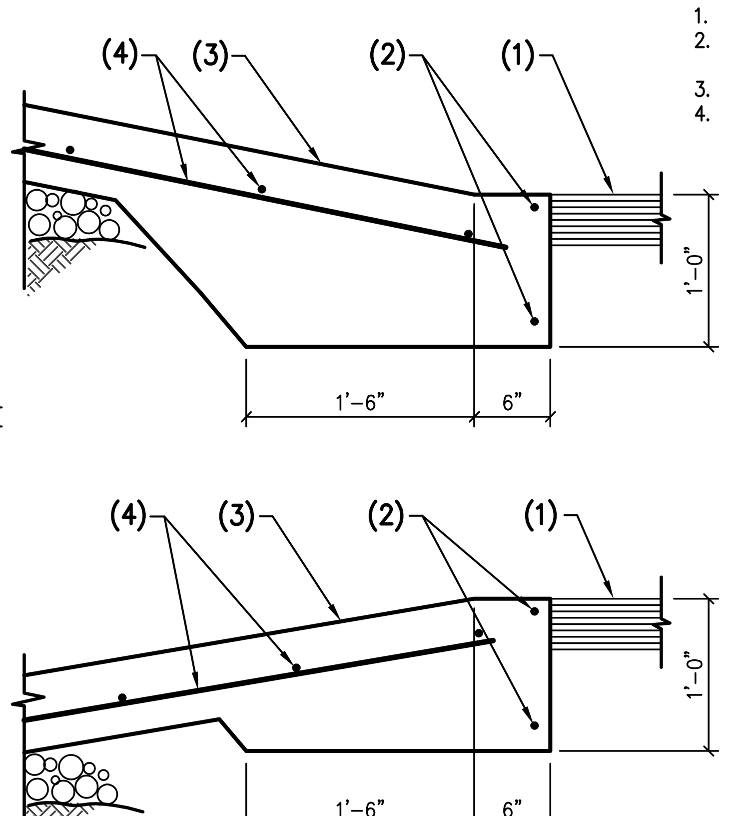

NOTES:

1. PAVEMENT - SEE CIVIL.
2. 1- #4 CONTINUOUS TOP AND BOTTOM.
3. CONCRETE SLAB.
4. REINFORCING PER PLAN.

115 SLAB EDGE AT RAMP

NO SCALE

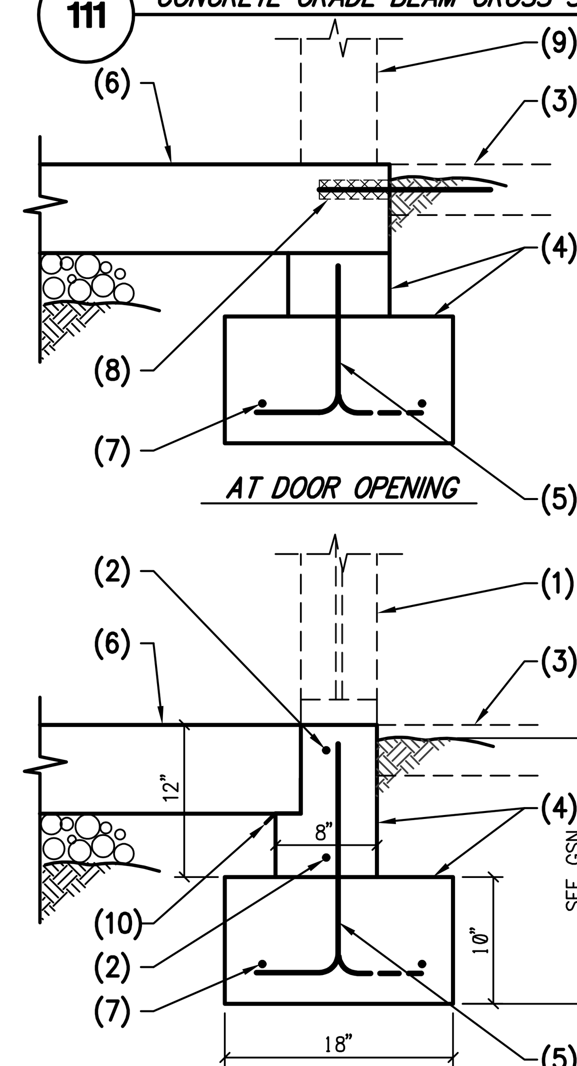

NOTES:

1. WINDOW WALL.
2. 1- #4 CONTINUOUS AT 12" O.C. MAX. VERTICALLY. (MIN. 1 AT TOP AND 1 BOTTOM).
3. FINISHED GRADE OR CONCRETE SLAB WHERE OCCURS.
4. CONCRETE STEM WALL AND FOOTING.
5. #4 HOOKED DOWELS AT 24" O.C. USE #5 AT 18" O.C. WHERE WALL HEIGHT EXCEEDS 18" - ALTERNATE BENDS.
6. CONCRETE SLAB ON GRADE.
7. 2- #4 CONTINUOUS BOTTOM.
8. PROVIDE 3/4"øx18" LONG SMOOTH DOWELS AT 24" O.C. -DOWELS MUST BE CAREFULLY ALIGNED AND SUPPORTED DURING OPERATIONS. MISALIGNED DOWELS CAUSE CRACKING.
9. LINE OF WALL BEYOND.
10. PROVIDE 2 LAYERS OF 30 MIL SLIP SHEET.

112 EXTERIOR WINDOW WALL FOOTING

NO SCALE

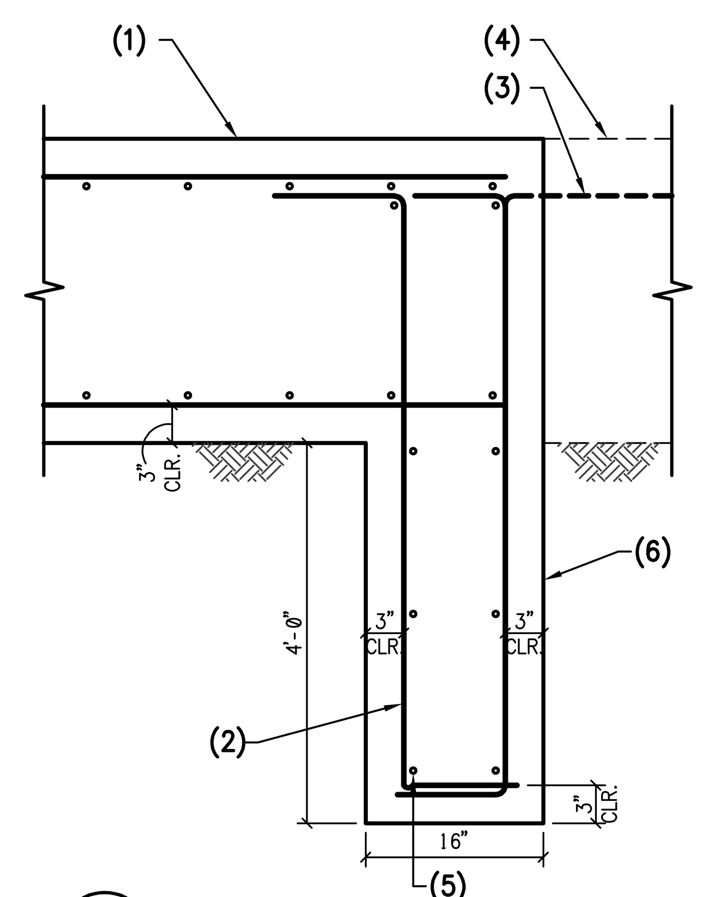

NOTES:

1. CONCRETE FOOTING.
2. #5 AT 12" O.C. E.F.
3. ALTERNATE BEND AS OCCURS.
4. CONCRETE FOOTING CONT. AS OCCURS.
5. #5 AT 8" O.C. (3 MIN. IN KEY) (EACH FACE AT 12" WIDE KEY).
6. 4'-0" DEEP x 1'-4" x CONT. CONCRETE KEY.

109 SHEAR KEY AT FOOTING

NO SCALE

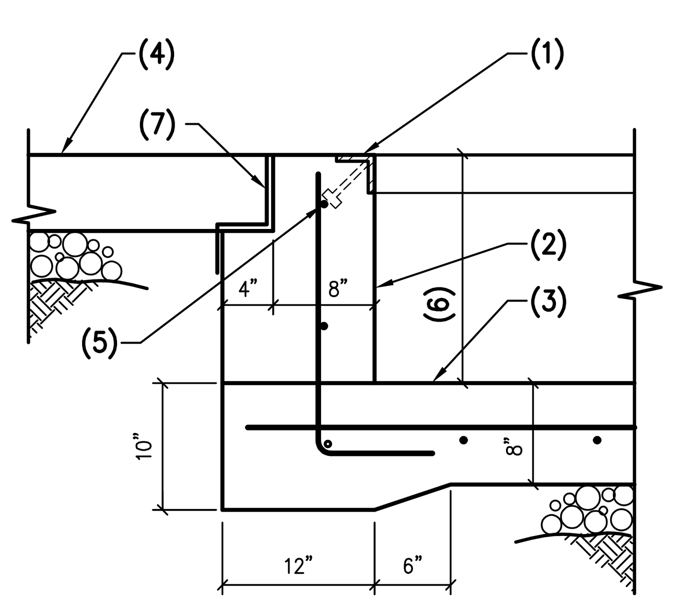

NOTES:

1. ANGLE FACING - 3"x3"x1/4" CONTINUOUS WITH 1/2"ø ANCHORS AT 9" O.C.
2. CONCRETE WALL WITH #4 VERTICAL WITH 16" HOOK AT 12" O.C.
3. CONCRETE SLAB ON GRADE WITH #4 AT 12" O.C. EACH WAY - SEE NOTE BELOW.
4. CONCRETE SLAB ON GRADE.
5. 1- #4 CONT WHERE SHOWN.
6. SEE ARCH'L.
7. 2 LAYERS OF 30 MIL SLIP SHEET.

NOTE:

PROVIDE 1/8":12" SLOPE TO WALL OPENING.

119 DOCK LEVELER PIT

NO SCALE

NOTES:

1. HANDRAIL TUBE PER ARCH'L.
2. METAL BAR GRATE PER ARCH'L.
3. 3/4"ø EXPANSION BOLTS AT 48" O.C. (3 MIN.) VERIFY WITH PRECASTER PRIOR TO DRILLING.
4. PRECAST CONCRETE WALL.
5. HSS3x3x1/4 WITH 4"x4"x3/8" CAP PLATE (OFFSET), LOCATE AT EACH CORNER. BOTH STRINGERS.
6. STEEL PLATE 3/4"x7"x12" WITH 2- 3/4"ø EXP. BOLTS AT 9" O.C.
7. STEEL CLIP ANGLE 4"x4"x3/8"x4" LONG WITH 1-3/4"ø EXPANSION BOLT.
8. MC12x10.6.
9. CHANNEL TO CHANNEL AT CORNERS.
10. 1/4" STEEL CLOSURE PLATE. WELD ALL AROUND.
11. STEEL CHANNEL C10x15.3 - 4 SIDES.
12. STEEL ANGLE 3x3x1/4 AT 24" O.C.

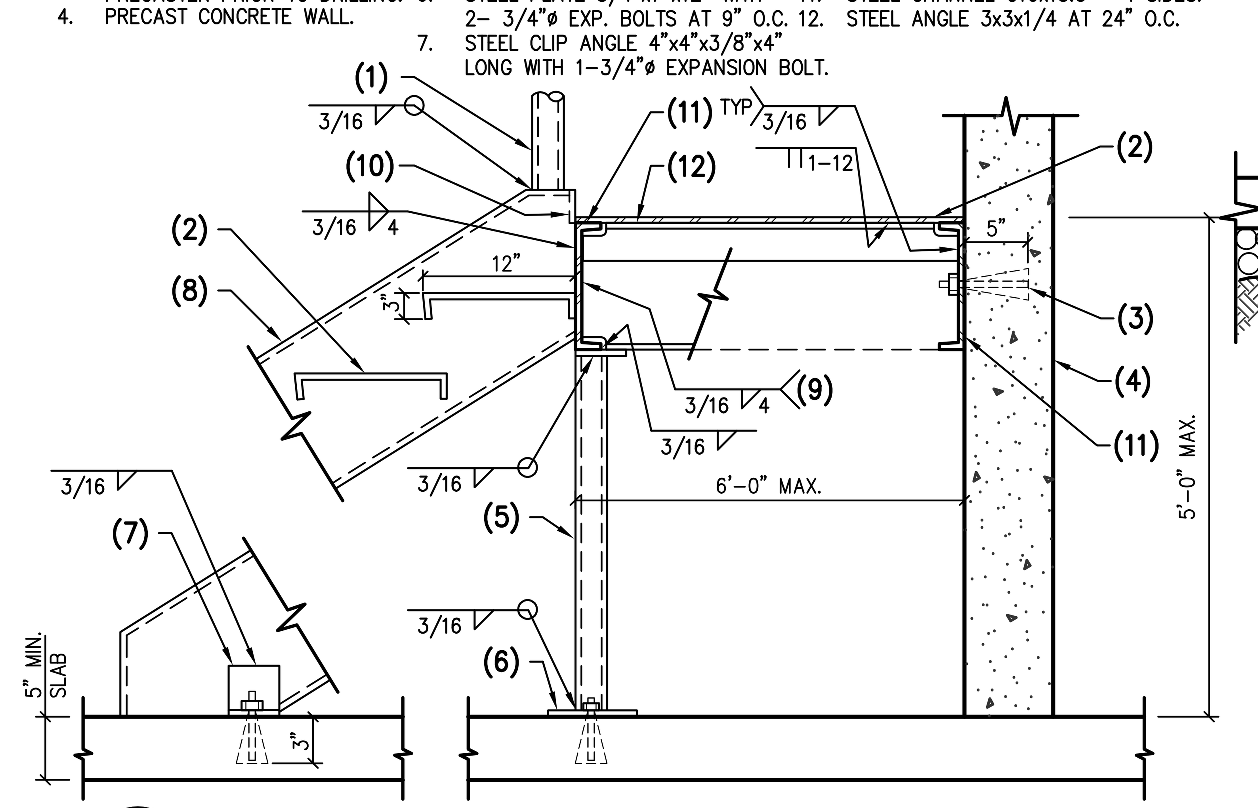

116 STEEL STAIR AT PRECAST CONCRETE WALL

NO SCALE

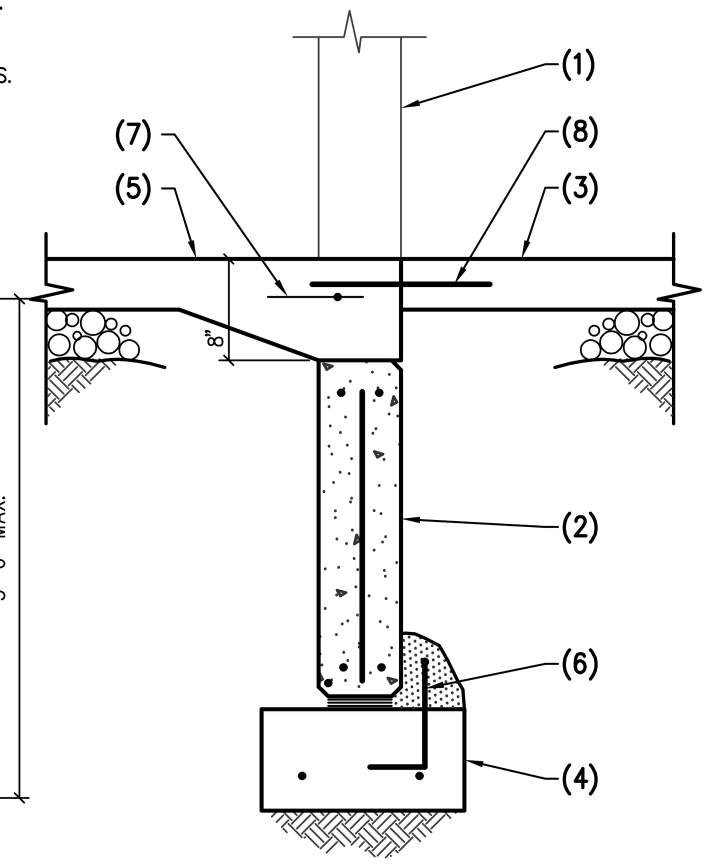

NOTES:

1. PRECAST CONCETE PANEL BEYOND.
2. PRECAST CONCRETE WALL.
3. CONCRETE RAMP SLAB.
4. CONCRETE FOOTING.
5. CONCRETE SLAB ON GRADE.
6. PRY BARS PER CONTRACTOR.
7. 1- #4x WIDTH OF OPENING.
8. 3/4"ø x14" SMOOTH DOWELS AT 18" O.C.

113 CONCRETE DOCK WALL

NO SCALE

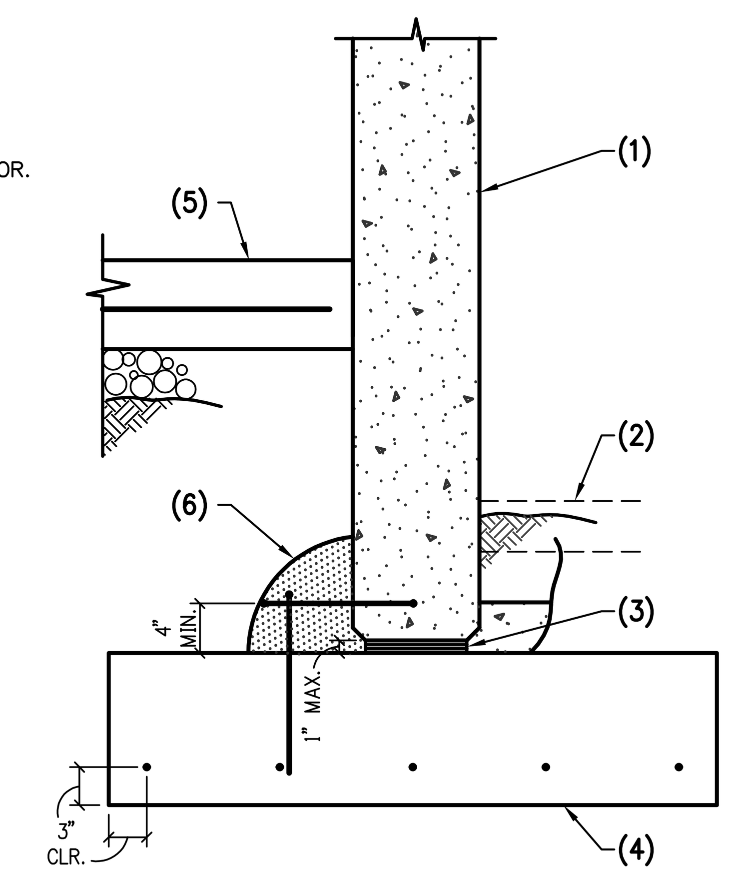

NOTES:

1. TILT-UP CONCRETE PANEL.
2. FINISHED GRADE OR CONCRETE SLAB WHERE OCCURS.
3. SEE "TYPICAL PRECAST CONCRETE PANEL AT CONCRETE FOOTING" DETAIL (DETAIL 102).
4. CONCRETE FOOTING.
5. CONCRETE CLOSURE POUR PER TYPICAL DETAIL 103.
6. SEE TYPICAL PRECAST CONCRETE PANEL AT FOOTING.

110 EXTERIOR TILT-UP CONCRETE DOCK WALL CONCRETE FOOTING

NO SCALE

Butler Design Group Inc.
architects & planners
5013 East Washington St. #100
Phoenix, Arizona 85034
Phone 602-957-1800

PROFESSIONAL STRUCTURAL ENGINEER No. 14160325 ROBERT HALLIDAY STATE OF UTAH 2/25/26

OWNERSHIP OF INSTRUMENTS OF SERVICE

PROPERTY RESERVE

PK Associates, L.L.C.
6900 E. Belleview Ave. #200
Greenwood Village, CO 80111
Phone: (720) 799-1058
Email: cadd@pkastructural.com
Website: www.pkastructural.com
Proj: 24295A

700 SOUTH
752 SOUTH 6200 WEST
SALT LAKE CITY, UTAH

Current Submittal: 100% CD SUBMITTAL 01/09/26

Revisions:

Project No.:	24295A
Issue Date:	02/25/2026
Drawn By:	PKA
Project Manager:	RH
Title:	FOUNDATION DETAILS

S502

NOTES:

1. STEEL ANGLE 3"x3"x1/4" x4'-0" W/ 1/2"ø HEADED STUDS AT 24" O.C.
2. REINFORCING TO MATCH SLAB REINFORCING PER DETAIL 119. LAP PER GSN.

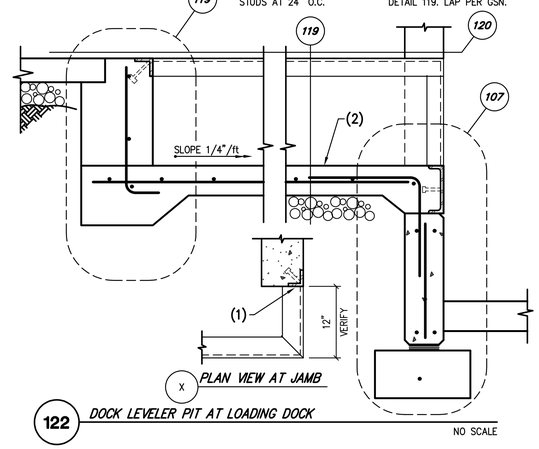

122 DOCK LEVELER PIT AT LOADING DOCK

NO SCALE

NOTES:

1. LINE OF WALL BELOW.
2. LINE OF CLOSURE POUR JOINT.

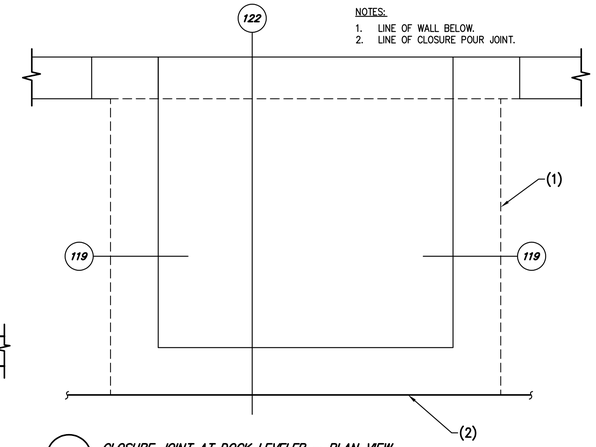

120 CLOSURE JOINT AT DOCK LEVELER – PLAN VIEW

NO SCALE

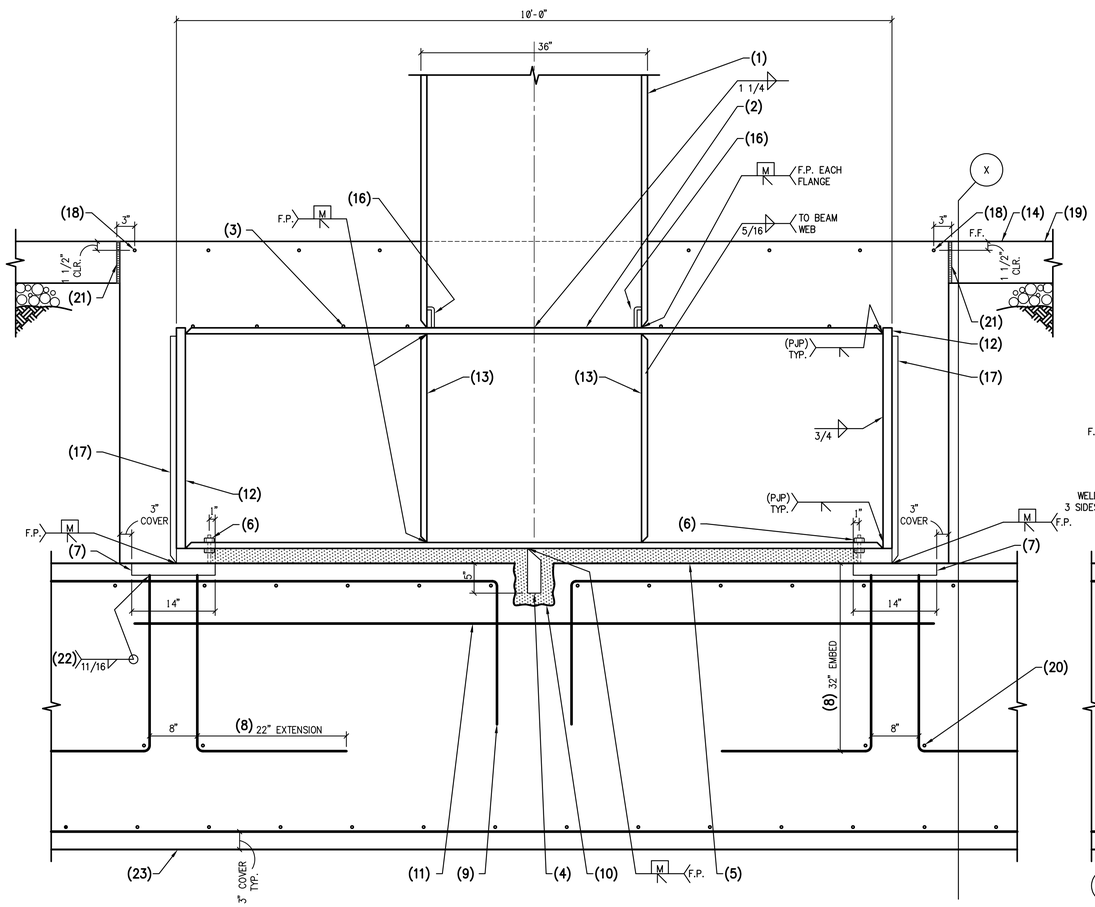

121 STEEL MOMENT FRAME AT CONCRETE FOOTING

NO SCALE

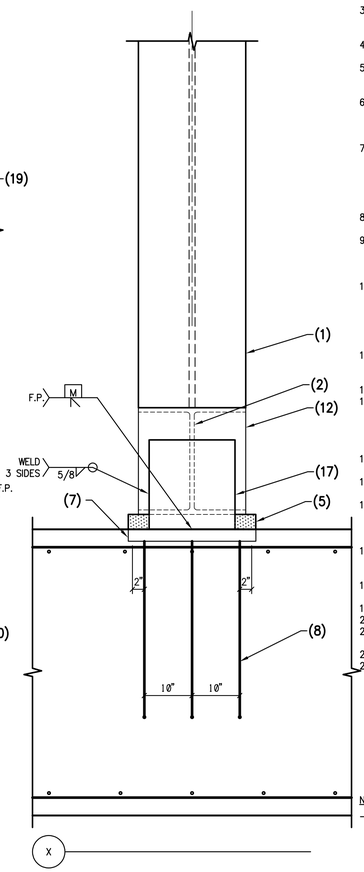

NOTES:

1. STEEL COLUMN.
2. BASE PLATE BEAM TO MATCH COLUMN SIZE.
3. 4– #4, 2 SIDES OF COLUMN. EXTEND TO END OF CLOSURE POUR.
4. SHEAR LUG 3 1/4"x7"x17 1/2" CENTERED UNDER COLUMN.
5. 2 1/2" THICK 10,000 PSI (MIN) HIGH STRENGTH NON–SHRINK FLOWABLE GROUT.
6. 1 1/4"ø AUTOMATIC WELDED THREADED STUDS AND LEVELER NUTS AS REQUIRED. TO BE UTILIZED FOR LEVELING ONLY.
7. 2"x14"x24" STEEL EMBED PLATE W/ 6– #11 WELDABLE (A706) BENT REBAR. LOCATE EMBED EACH END OF BEAM (2 TOTAL). CENTER PLATE TO ALIGN WITH VERTICAL PLATE.
8. HOOK EMBEDMENT AND EXTENSION AS SPECIFIED.
9. PROVIDE STD. HOOKS AS SHOWN AT THE END OF THE REINFORCEMENT INTERRUPTED BY SHEAR LUG.
10. BLOCKOUT FOR SHEAR KEY. FILL W/ MIN. 10,000 PSI HIGH STRENGTH NON–SHRINK FLOWABLE GROUT. BLOCK SIZE TO BE 2" CLEARANCE AROUND SHEAR KEY.
11. REBAR TO MATCH AND LAP (NON CONTACT LAP) BARS INTERRUPTED BY SHEAR LUG.
12. 1 1/2" THICK END PLATE.
13. STEEL CONTINUITY PLATES ALIGNED WITH EACH COLUMN FLANGE, BOTH SIDES. THICKNESS TO MATCH THAT OF COLUMN FLANGES.
14. CLOSURE POUR PER TYPICAL DETAIL.
15. CORNER BAR PER TYPICAL DETAIL.
16. STEEL BACKER PLATES AS REQUIRED. REMOVE AND BACK–WELD WITH 5/16" FILLET TO REMOVE SLAG.
17. 1"x13"x15" (LSV) STEEL SIDE PLATE AT 2 ENDS OF BEAM.
18. 4– #4 PERIMETER BAR, TYP. 4 SIDES OF CLOSURE POUR.
19. CONCRETE SLAB ON GRADE.
20. 8– #5 x 6'–0" AT HOOK.
21. 1/4" CONTINUOUS SHEET FLEX FORM.
22. E80 ELECTRODE.
23. CONCRETE FOOTING.

NOTE:

– ALL WELDS ARE DEMAND CRITICAL.

Butler Design Group Inc.
architects & planners

5013 East Washington St. #100
Phoenix, Arizona 85034
Phone 602-957-1800

PROFESSIONAL STRUCTURAL ENGINEER
No. 14160325
ROBERT HALLIDAY
STATE OF UTAH
REVISED

OWNERSHIP OF INSTRUMENTS OF SERVICE
REPORTS, DRAWINGS, SPECIFICATIONS, COMPUTER FILES, FIELD DATA, notes and other documents and instruments prepared by the design professional as instruments of service shall remain the property of the design professional. The design professional shall retain all common law, statutory and other reserved rights, including the copyright thereto.

PROPERTY RESERVE

PK Associates, L.L.C.
6900 E. Belleview Ave. #200
Greenwood Village, CO 80111
Phone: (720) 799-1058
Email: cadd@pkastructural.com
Website: www.pkastructural.com
Proj: 24295A

700 SOUTH

752 SOUTH 6200 WEST
SALT LAKE CITY, UTAH

Current Submittal: 100% CD SUBMITTAL
01/09/26

Revisions:

Project No.:	24295A
Issue Date:	02/25/2026
Drawn By:	PKA
Project Manager:	RH
Title:	FOUNDATION DETAILS

S503

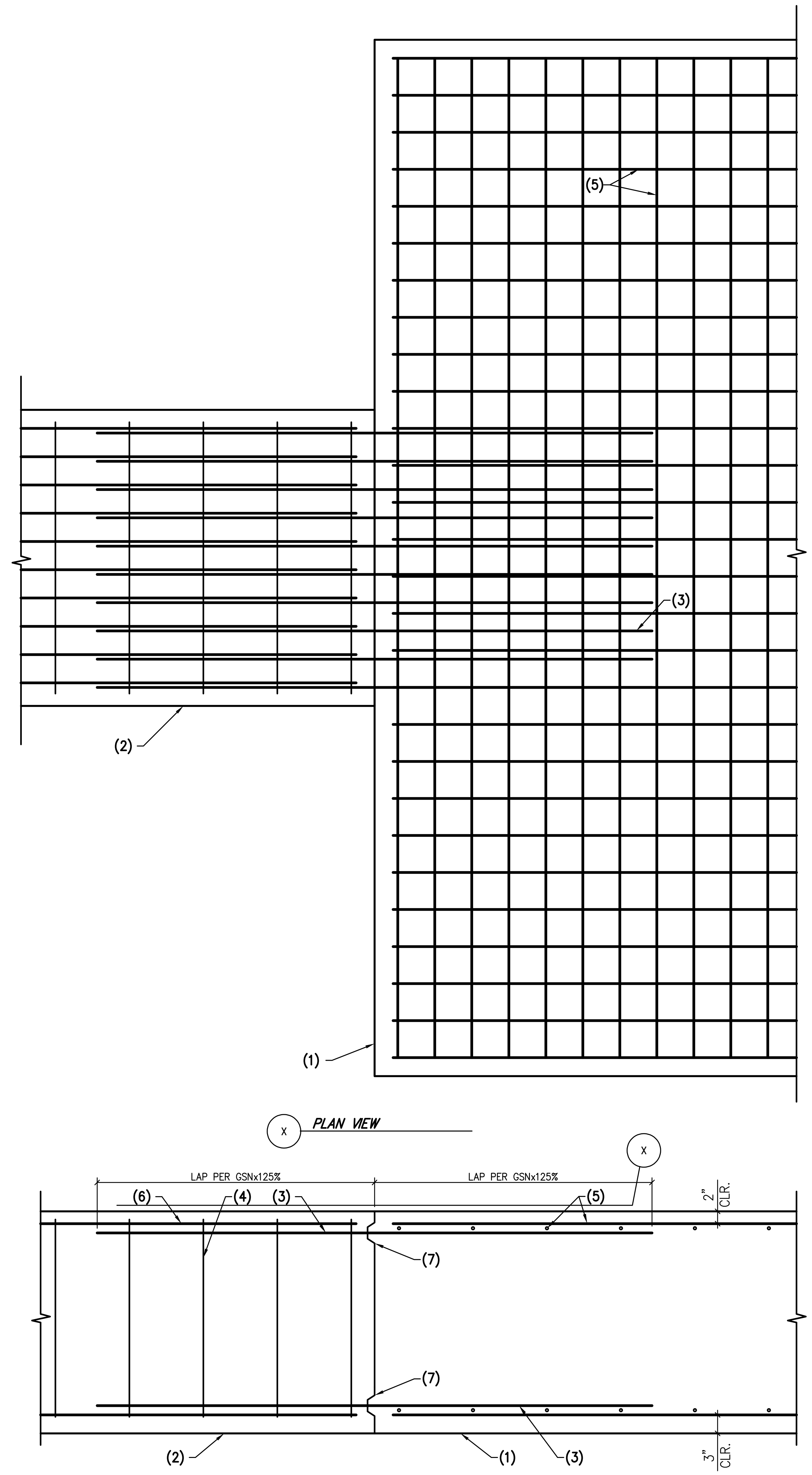

123 CONCRETE GRADE BEAM AT CONCRETE FOOTING

NO SCALE

NOTES:

1. CONCRETE FOOTING.
2. CONCRETE GRADE BEAM.
3. DOWELS TO MATCH GRADE BEAM REINFORCEMENT.
4. TIES PER GRADE BEAM SCHEDULE.
5. CONCRETE FOOTING REINFORCEMENT PER SCHEDULE.
6. GRADE BEAM REINFORCEMENT PER SCHEDULE.
7. KEYED JOINT.

NOTES:

SEE DETAIL 109 AND 111 FOR ADDITIONAL REINFORCEMENT REQUIREMENTS.

Butler Design Group Inc.
architects & planners
5013 East Washington St. #100
Phoenix, Arizona 85034
Phone 602-957-1800

PROFESSIONAL STRUCTURAL ENGINEER
No. 14160325
ROBERT HALLIDAY
STATE OF UTAH
2/25/26

OWNERSHIP OF INSTRUMENTS OF SERVICE
All reports, plans, specifications, computer files, field data, notes and other documents and instruments prepared by the design professional as instruments of service shall remain the property of the design professional. The design professional shall retain all common law, statutory and other reserved rights, including the copyright thereto.

PROPERTY RESERVE

PK Associates, L.L.C.
6900 E. Belleview Ave. #200
Greenwood Village, CO 80111
Phone: (720) 799-1058
Email: cadd@pkastructural.com
Website: www.pkastructural.com
Proj: 24295A

700 SOUTH
752 SOUTH 6200 WEST
SALT LAKE CITY, UTAH

Current Submittal: 100% CD SUBMITTAL
01/09/26

Revisions:

Project No.:	24295A
Issue Date:	02/25/2026
Drawn By:	PKA
Project Manager:	RH
Title:	FOUNDATION DETAILS

S504

NOTES:
1. CONCRETE WALL PANEL AT RETURN.
2. HOOK HORIZONTAL WALL REINFORCING AT RETURN LOCATIONS.
3. PANEL REINFORCING PER ELEVATIONS AND TYPES.
4. #5 VERTS EACH FACE AT 6" O.C. MAX.
5. #4 HORIZ. TIES AT 8" O.C. WITH STANDARD 135° HOOK – ALTERNATE BENDS.

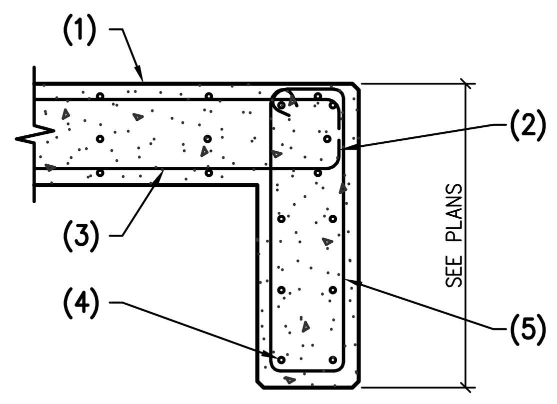

209 CONCRETE WALL PANEL RETURN
NO SCALE

NOTES:
1. PRECAST CONCRETE PANEL.
2. PANEL JOINT.
3. 1– #4x4'–0" LONG.
4. 1– #4x2'–0" LONG CORNER BAR.
5. PERIMETER BAR BENT TO EXTEND 1'–6" BEYOND OPENING (OR 2" SHORT OF ADJACENT OPENING AS OCCURS).
6. 1– #4 EXTEND 1'–6" MIN. BEYOND OPENING.

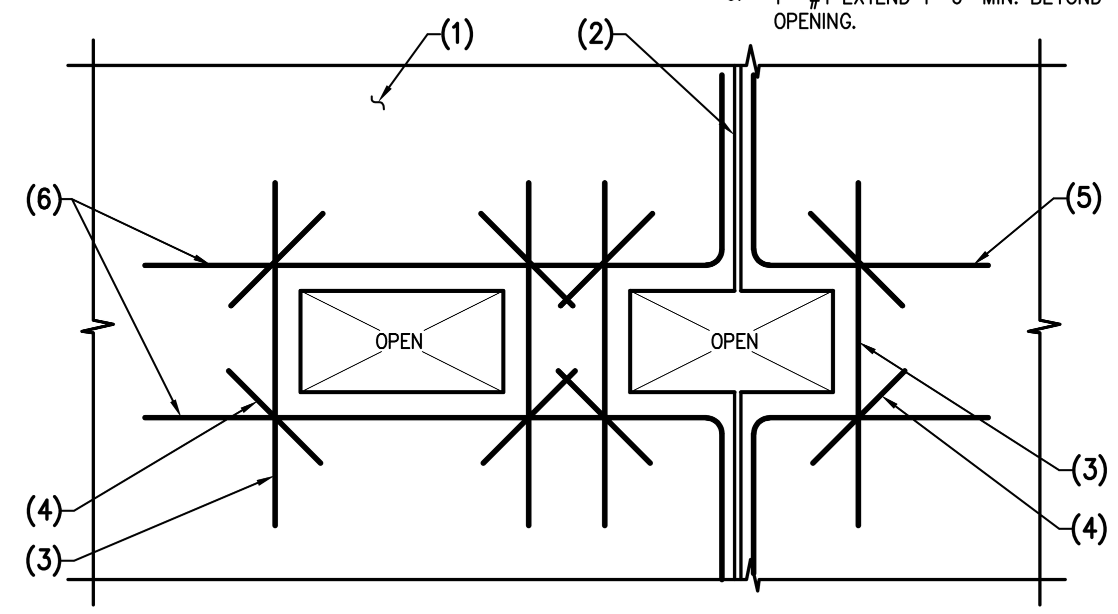

206 TYPICAL REINFORCING AT SCUPPER OPENING AT PANEL JOINT
NO SCALE

NOTE:
LOCATE PLATES 24" MAX. FROM TOP OF PARAPET, 12" BELOW ROOF LINE, AND AT MID–HEIGHT OF PANEL – TYP. U.N.O.

NOTES:
1. PRECAST CONCRETE PANEL.
2. STEEL EMBED 3/8"x6"x12" W/ 2– 3/4"ø HEADED STUDS AT 7" O.C.
3. STEEL ANGLE 4"x4"x5/16"x8" LONG.
4. STEEL PLATE 3/8"x7"x10" (LLH).
5. NOT REQ'D ABOVE ROOF LINE.
6. 2– #5x24" LONG DRAG BARS AT 9" O.C.
7. 2– #5x [4" | 24" | 3"] DRAG BARS AT 9" O.C.
8. MITERED CORNER WHERE SHOWN ON PANEL ELEV.

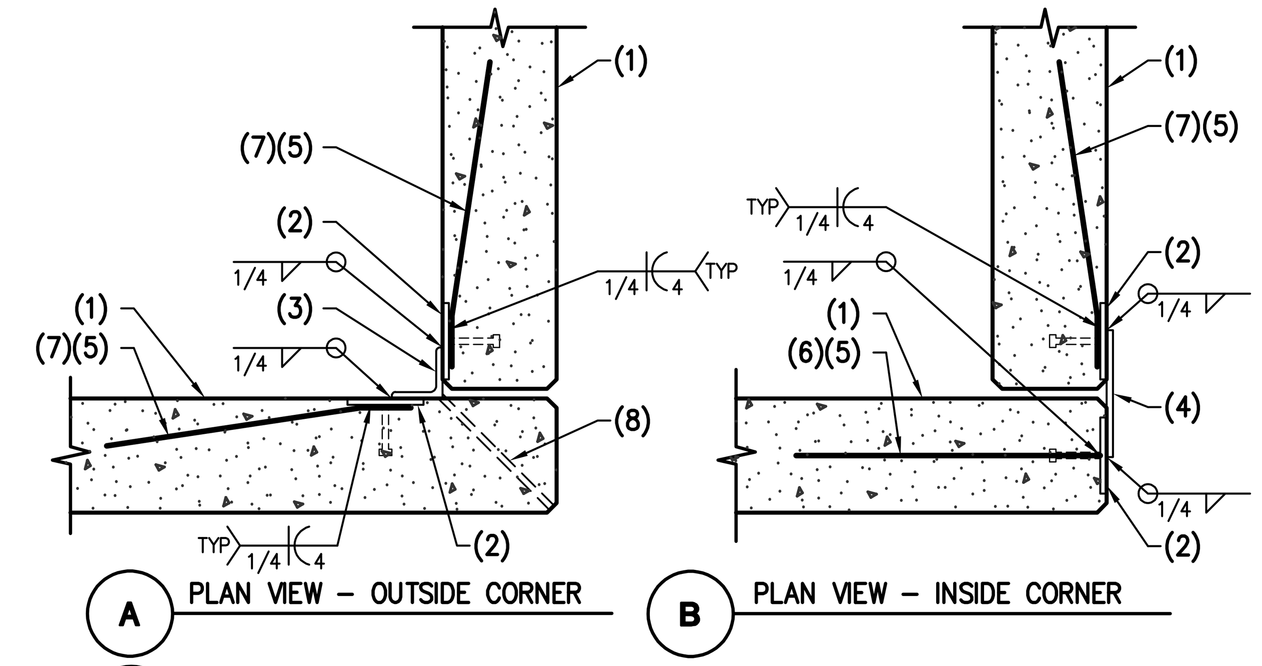

203 TYPICAL – PRECAST PANEL TO PANEL CONNECTION AT CORNER
NO SCALE

NOTES:
1. TYPICAL MAT SPACING OR LESS.
2. TYPICAL MAT REINF. SEE PANEL ELEVATION – MAY BE OMITTED WHERE SPECIAL REINF. IS SPECIFIED ON PANEL TYPE.
3. ADDITIONAL VERT. REINF. – SEE PANEL ELEVATIONS.
4. SEE PANEL TYPES FOR SPACING.
5. 1– #5x4'–0" LONG CORNER BAR – INSTALL IN CENTER OF PANEL. (USE 2– #4x6'–0" WHERE OPENING WIDTH IS GREATER THAN 10'–0" AND 2– #5x8'–0" AT OPENINGS GREATER THAN 16'–0").
6. SLAB DOWELS PER DETAIL 103. 2" MIN FROM EDGE TO OPENING. FIRST DOWEL 6" FROM JAMB OR EDGE.
7. WHERE 2'–0" CANNOT BE ATTAINED, EXTEND BARS AS FAR AS POSSIBLE AND HOOK OR BEND.
8. TYPICAL OPENING PERIMETER BARS 2– #5 (1 EACH FACE).
9. 6" HOOK AT OPENING PERIMETER BARS.
10. EQ. SPACES UNLESS NOTED OTHERWISE ON PANEL TYPES.

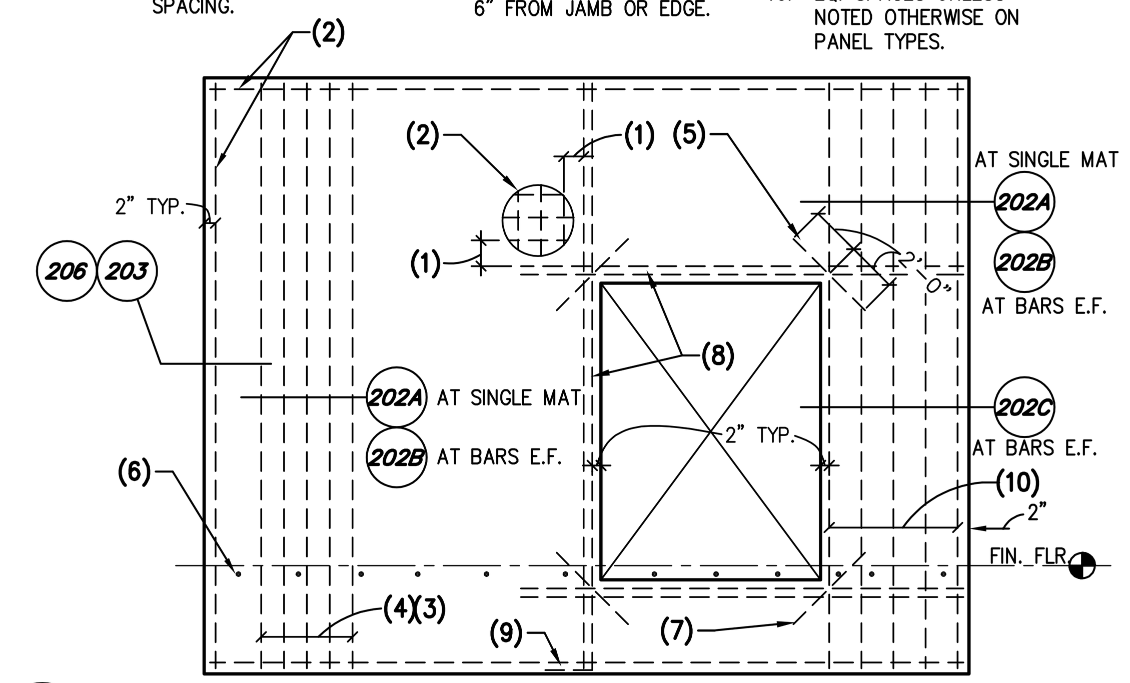

201 TYPICAL TILT PANEL REINFORCING PLACEMENT
NO SCALE

NOTES:
1. CONCRETE TILT PANEL.
2. EMBEDS AND ANGLE PER DETAIL 203.

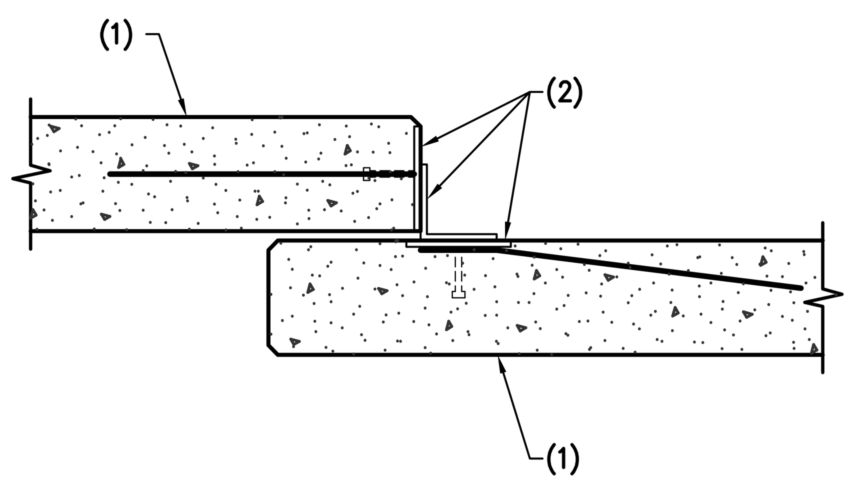

210 TYPICAL PANEL OVERLAP CONNECTION
NO SCALE

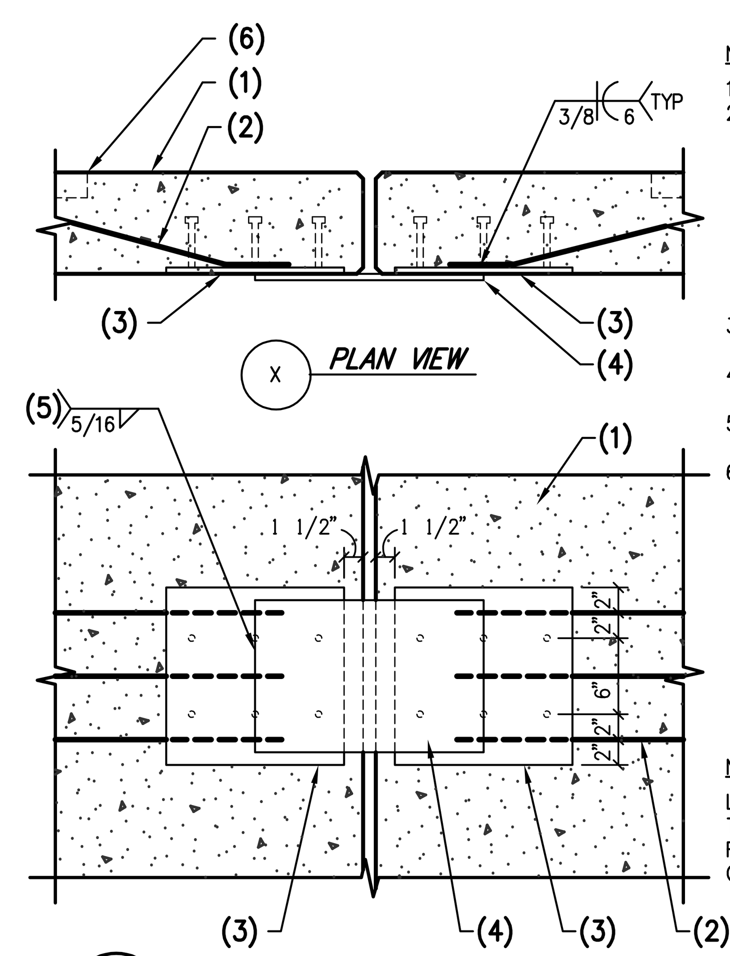

NOTES:
1. PRECAST CONCRETE WALL.
2. 3– #6x [6" | 30" | 3"] AT 6" O.C. EACH SIDE OF PLATE. (ASTM A706 WELDABLE REBAR). PROVIDE STD. HOOK WHERE LENGTH CAN'T BE ACHIEVED.
3. 1/2"x14"x14" STEEL EMBED PLATE W/ 6– 3/4"øx6" H.S.
4. 1/2"x12"x18" (SLV) STEEL PLATE.
5. 3 SIDES TO EACH EMBED PLATE.
6. LINE OF RECESSED WALL, WHERE OCCURS.

NOTE:
LOCATE PLATES 24" MAX. FROM TOP OF PARAPET, 12" BELOW ROOF LINE, AND AT MID–HEIGHT OF PANEL – TYP. U.N.O.

207 ELEVATION VIEW – SPECIAL PANEL TO PANEL CONNECTION
NO SCALE

NOTES:
1. PRECAST CONCRETE PANEL.
2. 4– #4x2'–0" DIAGONAL BARS – CENTERED.
3. OPENING FOR ROOF DRAIN – VERIFY EXACT SIZE AND LOCATION REQ'D W/ PLUMBING AND ARCH'L DRAWINGS.
4. PANEL JOINT.

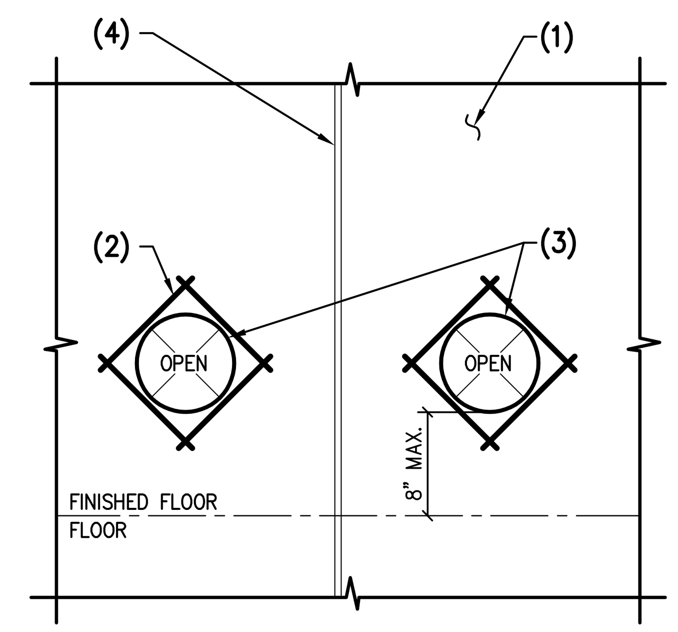

204 TYPICAL REINFORCING AROUND SMALL OPENING IN PANEL
NO SCALE

NOTES:
1. VERTICAL REINFORCING PER PANEL ELEVATION.
2. 3/4" REVEAL – SEE ARCH'L.
3. TYPICAL MAT REINFORCING.

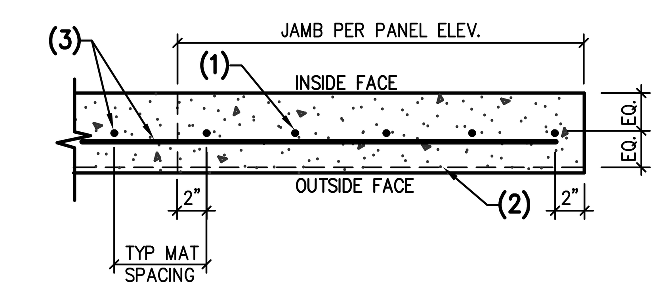

A SINGLE MAT REINFORCING PLACEMENT DIAGRAM
JAMB CONDITION SHOWN – INTERIOR SIMILAR
NO SCALE

NOTES:
1. 1" CLEAR FOR #8 BARS AND SMALLER 1 1/2" CLEAR FOR #9 BARS.
2. 3/4" REVEAL – SEE ARCH'L.
3. TYPICAL MAT REINFORCING.
4. STAGGER LOCATIONS OF ALL HORIZONTAL REINFORCING.
5. #4 BOLSTER BARS AT 4'–0" O.C. EACH LAYER.
6. VERTICAL REINFORCING EACH FACE PER PANEL ELEVATION.

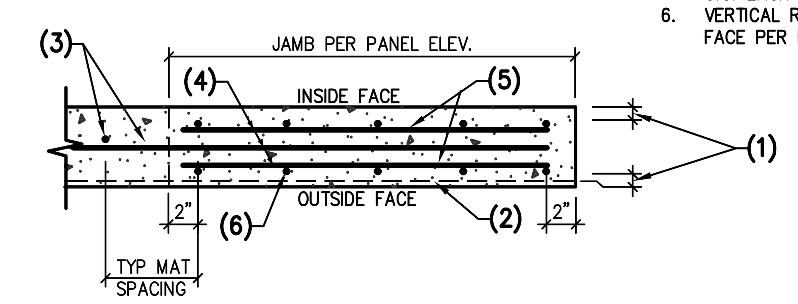

B DOUBLE MAT REINFORCING PLACEMENT DIAGRAM
JAMB CONDITION SHOWN – INTERIOR CONDITION SIMILAR
NO SCALE

NOTES:
1. CONCRETE TILT PANEL.
2. C9x15x4'–0" LONG WITH 1/2"øx4" HEADED STUDS AT 16" O.C. MAX. ACCEPTABLE TO USE A 1/4" THICK BENT PLATE WITH 2 1/2" LONG RETURN LEGS.

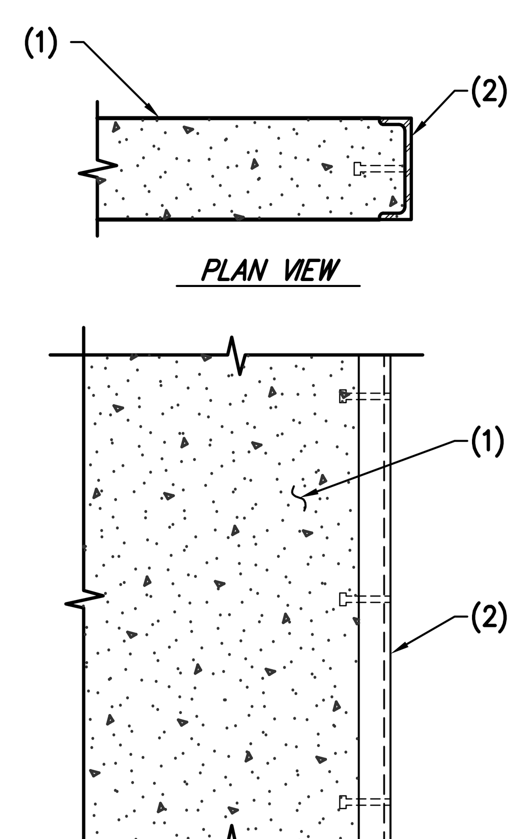

208 TYPICAL STEEL CHANNEL AT DOCK DOOR OPENINGS
NO SCALE

NOTES:
1. PRECAST CONCRETE PANEL.
2. PERIMETER BAR PER PANEL ELEVATION.
3. 2– #4x2'–0" LONG.
4. 4" RADIUS.

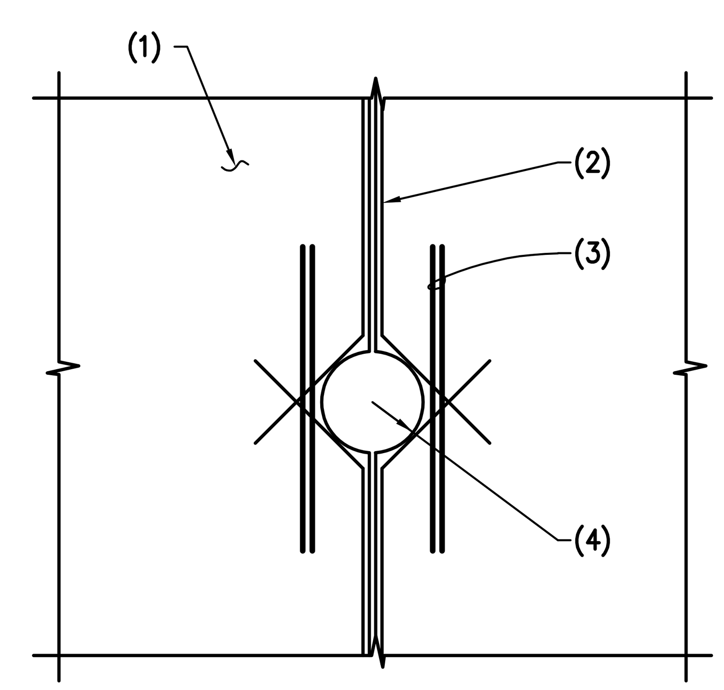

205 TYPICAL REINFORCING AROUND SMALL OPENING IN PANEL
NO SCALE

NOTES:
1. DOUBLE ROW OF TYPICAL HORIZONTAL REINFORCING STAGGERED EACH FACE – TYP.
2. 3/4" REVEAL – SEE ARCH'L.
3. VERTICAL REINFORCING EACH FACE PER PANEL ELEVATION.
4. 1" CLEAR FOR #8 BARS AND SMALLER 1 1/2" CLEAR FOR #9 BARS.

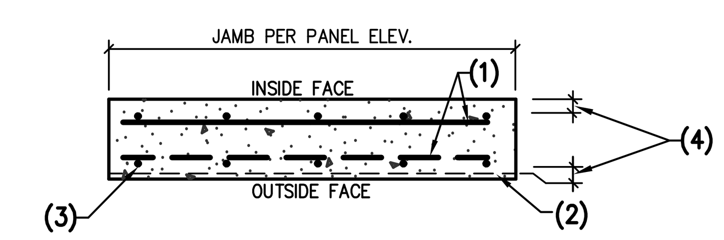

C DOUBLE MAT REINFORCING PLACEMENT DIAGRAM
JAMB CONDITION SHOWN INTERIOR CONDITION SIMILAR
NO SCALE

202 TYPICAL MAT REINFORCING DETAILS
JAMB CONDITION SHOWN – INTERIOR CONDITION SIMILAR
NO SCALE

Butler Design Group Inc.
architects & planners
5013 East Washington St. #100
Phoenix, Arizona 85034
Phone 602-957-1800

PROFESSIONAL STRUCTURAL ENGINEER
No. 14160325
ROBERT HALLIDAY
STATE OF UTAH
2/25/26

OWNERSHIP OF INSTRUMENTS OF SERVICE
All reports, plans, specifications, computer files, field data, notes and other documents and instruments prepared by the design professional as instruments of service shall remain the property of the design professional. The design professional shall retain all common law, statutory and other reserved rights, including the copyright thereto.

PROPERTY RESERVE

PK Associates, L.L.C.
6900 E. Belleview Ave. #200
Greenwood Village, CO 80111
Phone: (720) 799-1058
Email: cadd@pkastructural.com
Website: www.pkastructural.com
Proj: 24295A

700 SOUTH
752 SOUTH 6200 WEST
SALT LAKE CITY, UTAH

Current Submittal: 100% CD SUBMITTAL
01/09/26

Revisions:

Project No.:	24295A
Issue Date:	02/25/2026
Drawn By:	PKA
Project Manager:	RH
Title:	TILT PANEL DETAILS

S601

NOTES:

1. STEEL BEAM.
2. CONCRETE TILT PANEL.
3. 1/2"x21"x PANEL WIDTH STEEL PLATE WITH 6– 1/2"ø H.S. AT 3" O.C.
4. HSS 16x4x3/8.
5. STEEL PLATE x 4" LONG.
6. INSIDE HSS TO EMBED.
7. PLATE TO INSIDE HSS.

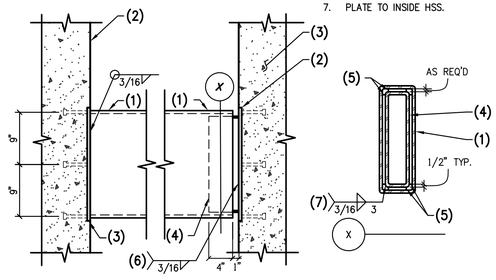

A ON OPPOSITE SIDE WHEN AT CONCRETE PANEL

214 STEEL BEAM AT CONCRETE TILT PANEL.

NO SCALE

NOTES:

1. CONCRETE TILT PANEL.
2. REINFORCING PER PLANS.
3. PROVIDE 2– #5 EACH FACE AT 3" O.C. TOP AND BOTTOM. (HOOK EACH END AT CONNECTION 3).
4. DRAIN PENETRATION PER ARCH'L AND PLUMBING PLANS.
5. HOOK BAR AT PANEL EDGE.
6. #3 HAIRPINSx 24" AT 2 1/2" O.C.
7. #3 TIES AT 2 1/2" O.C.

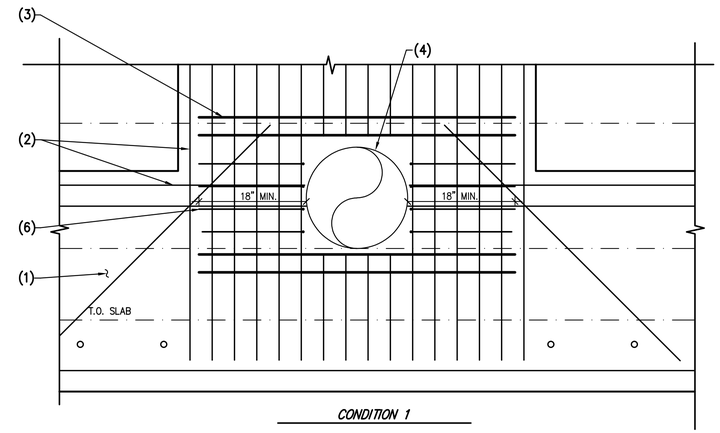

CONDITION 1

NOTES:

1. CONCRETE TILT PANEL.
2. 8 1/2"x12"x3/4" EMBED PLATE WITH 4– #6 WELDABLE BARS x30" LONG – PROVIDE #3 TIES AT 3" O.C. AS SHOWN.
3. STEEL COLUMN PER PLANS.

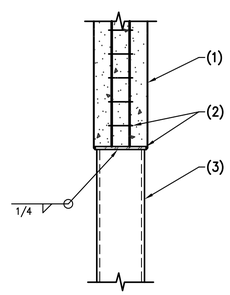

215 STEEL COLUMN AT CONCRETE WALL

NO SCALE

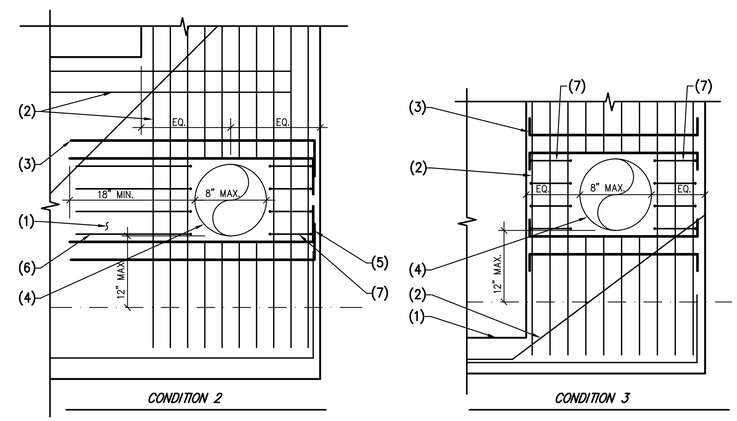

211 ROOF DRAIN PENETRATIONS AT TILT PANELS

NO SCALE

NOTES:

1. CONCRETE TILT PANEL.
2. TYPICAL PANEL REINFORCING.
2. JAMB REINFORCING.

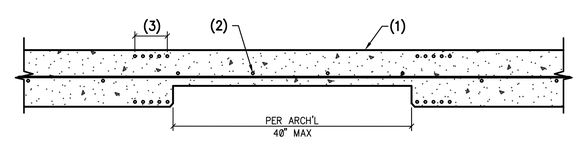

213 PLAN–LARGE RECESS AT CONCRETE PANEL

NO SCALE

NOTES:

1. CONCRETE TILT PANEL.
2. #4 TIES AT 6" O.C. VERTICALLY.
3. MAXIMUM HORIZONTAL TIE SPACING = 12".
4. REINFORCING PER PANEL TYPES.
5. ALTERNATE HOOK SIDE OF TIES.

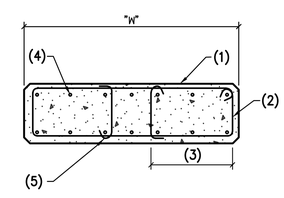

NOTE:

– TIES TO EXTEND "W" ABOVE AND BELOW ADJACENT OPENING.

212 PLAN – TIES AT WALL PIERS

NO SCALE

Butler Design Group Inc.
architects & planners
5013 East Washington St. #100
Phoenix, Arizona 85034
Phone 602-957-1800

PROFESSIONAL STRUCTURAL ENGINEER
No. 14160325
ROBERT HALLIDAY
STATE OF UTAH
REVISED

OWNERSHIP OF INSTRUMENTS OF SERVICE
REPORTS, PLANS, SPECIFICATIONS, COMPUTER FILES, FIELD data, notes and other documents and instruments prepared by the design professional as instruments of service shall remain the property of the design professional. The design professional shall retain all common law, statutory and other reserved rights, including the copyright thereto.

PROPERTY RESERVE

PK Associates, L.L.C.
6900 E. Belleview Ave. #200
Greenwood Village, CO 80111
Phone: (720) 799-1058
Email: cadd@pkastructural.com
Website: www.pkastructural.com
Proj: 24295A

700 SOUTH

752 SOUTH 6200 WEST
SALT LAKE CITY, UTAH

Current Submittal: 100% CD SUBMITTAL
01/09/26

Revisions:

Project No.:	24295A
Issue Date:	02/25/2026
Drawn By:	PKA
Project Manager:	RH

Title: TILT PANEL DETAILS

S602

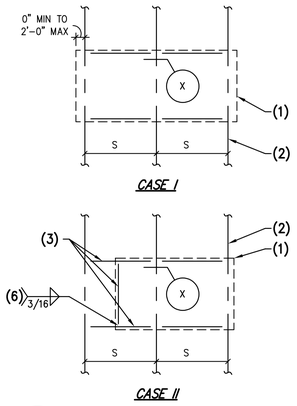

NOTES:
1. LINE OF MECH'L. UNIT AND CURB AS OCCURS.
2. STRUCTURAL ROOF MEMBER.
3. ADD'L. SUPPORTING ANGLES:
   S ≤ 6'-3" (4x4x3/8")
   6'-3" < S ≤ 8'-0" (5x5x3/8")
4. MAX COPING OF TOP FLANGE = THICKNESS OF VERT. LEG (i.e. MIN. HORIZ. FLANGE = 4"-3/8" FOR <4x4.
5. CONT. WHERE OCCURS EACH SIDE.
6. ANGLE TO ANGLE.

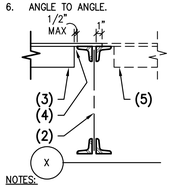

NOTES:
-IF MECH'L CURB PROVIDED BY CONTRACTOR STRUCTURALLY SPANS BETWEEN ROOF MEMBER, NO SUPPORTING ANGLES ARE REQ'D. AT CASE I.
-IF NO STRUCTURAL CURB IS PROVIDED, SUPPORTING ANGLES REQ'D. BOTH CASES.
-MAX. MECH'L. WEIGHT ≤200LB/FT/CURB.
-SEE TYP. DET. 202 FOR DUCT OPENING FRAMING AS REQ'D.

308 TYPICAL FRAMING AT MECHANICAL UNIT ≤750 LBS.

NO SCALE

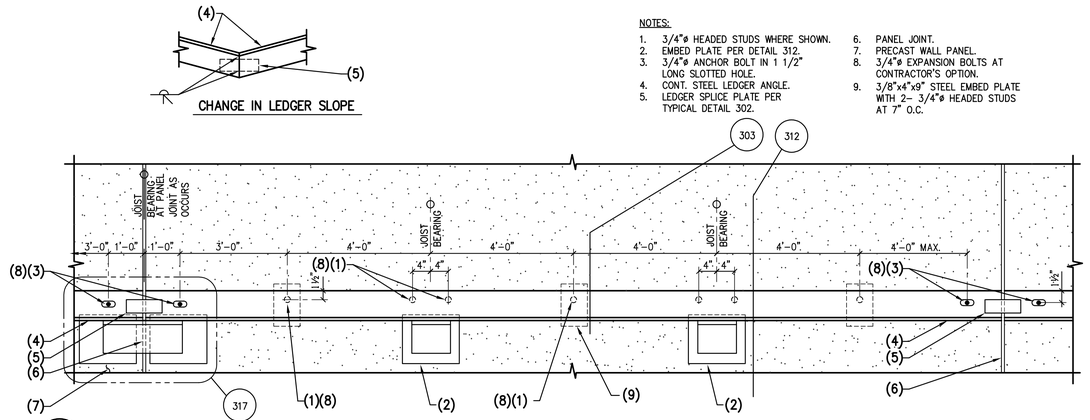

NOTES:
1. 3/4"ø HEADED STUDS WHERE SHOWN.
2. EMBED PLATE PER DETAIL 312.
3. 3/4"ø ANCHOR BOLT IN 1 1/2" LONG SLOTTED HOLE.
4. CONT. STEEL LEDGER ANGLE.
5. LEDGER SPLICE PLATE PER TYPICAL DETAIL 302.
6. PANEL JOINT.
7. PRECAST WALL PANEL.
8. 3/4"ø EXPANSION BOLTS AT CONTRACTOR'S OPTION.
9. 3/8"x4"x9" STEEL EMBED PLATE WITH 2- 3/4"ø HEADED STUDS AT 7" O.C.

304 ELEVATION – STEEL BEARING LEDGER

NO SCALE

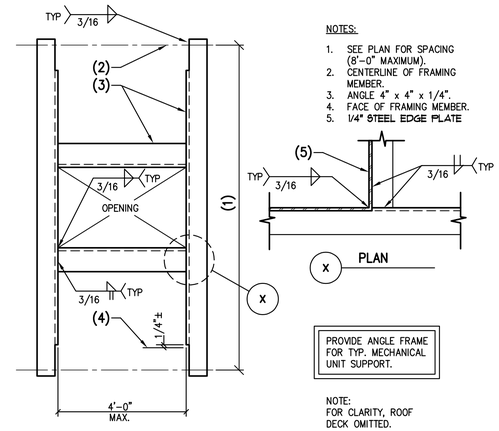

NOTES:
1. SEE PLAN FOR SPACING (8'-0" MAXIMUM).
2. CENTERLINE OF FRAMING MEMBER.
3. ANGLE 4" x 4" x 1/4".
4. FACE OF FRAMING MEMBER.
5. 1/4" STEEL EDGE PLATE

NOTE:
FOR CLARITY, ROOF DECK OMITTED.

301 PLAN – TYPICAL OPENING IN FRAMING

NO SCALE

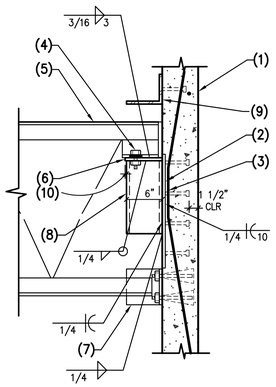

NOTES:
1. PRECAST CONCRETE WALL.
2. STEEL PLATE 3/4"x27"x36" WITH 8- 3/4"ø x 6 1/4" HEADED STUDS AT 24" O.C. HORIZONTAL, 11" O.C. VERTICAL.
3. 5- #7x 54" 10" 54" 4" AT 4" O.C.
4. 3/4"ø THRU BOLT IN 1 1/2" LONG SLOTTED HOLES.
5. STEEL JOIST GIRDER.
6. 1/2" CAP PLATE.
7. STEEL ANGLE 6"x6"x3/4"x 0'-8" LONG WITH 2- 1/2"ø EXPANSION BOLTS AT 6" O.C.
8. TS 10"x6"x3/8"x 1'-6" LONG.
9. CONT. STEEL LEDGER.
10. 1/4" TYP. 3 SIDES.

NOTE:
- GIRDER SHALL BE WELDED AT WALL END ONLY. DO NOT WELD WHEN AT COLUMN.
- REF DETAIL 316 WHERE GIRDER BEARING OCCURS AT PANEL JOINT.

309 STEEL JOIST GIRDER TO PRECAST CONCRETE WALL

NO SCALE

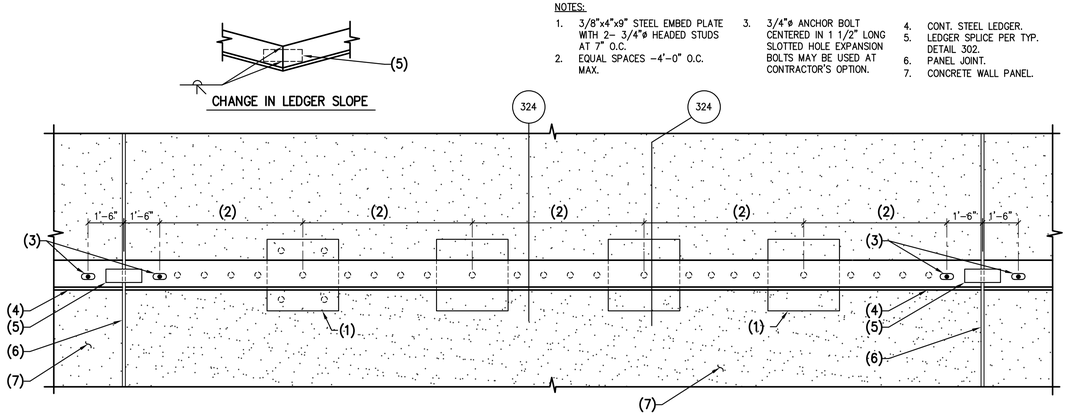

NOTES:
1. 3/8"x4"x9" STEEL EMBED PLATE WITH 2- 3/4"ø HEADED STUDS AT 7" O.C.
2. EQUAL SPACES -4'-0" O.C. MAX.
3. 3/4"ø ANCHOR BOLT CENTERED IN 1 1/2" LONG SLOTTED HOLE EXPANSION BOLTS MAY BE USED AT CONTRACTOR'S OPTION.
4. CONT. STEEL LEDGER.
5. LEDGER SPLICE PER TYP. DETAIL 302.
6. PANEL JOINT.
7. CONCRETE WALL PANEL.

305 ELEVATION –NON BEARING STEEL ANGLE LEDGER

NO SCALE

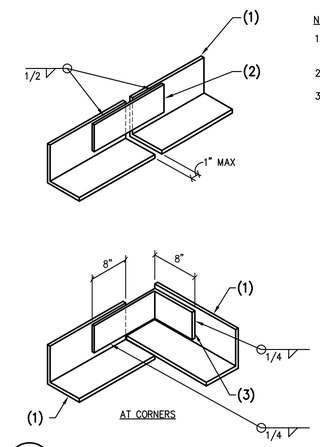

NOTES:
1. STEEL LEDGER ANGLE – FOR SIZE AND LOCATION, SEE PLAN.
2. STEEL PLATE 3/4"x3 3/4"x16" LONG GRADE 50 U.N.O.
3. STEEL PLATE 3/4"x3 3/4"x LENGTH SHOWN. GRADE 50, U.N.O.

302 TYPICAL SPLICE IN CONTINUOUS STEEL LEDGER ANGLE

NO SCALE

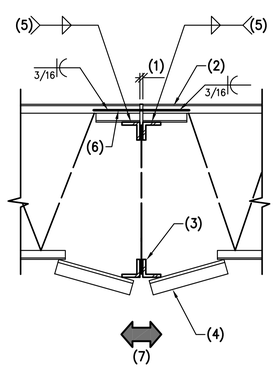

NOTES:
1. 1/2" MAXIMUM.
2. STEEL JOIST.
3. STEEL JOIST GIRDER OR STEEL BEAM GIRDER AS OCCURS.
4. STEEL ANGLE BRACE AS REQUIRED BY GIRDER MANUFACTURER. SEE ERECTION DRAWINGS FOR SIZE, LOCATION, QUANTITY, AND ATTACHMENT.
5. 1/8"x3" EACH SIDE AT K JOISTS, 1/4"x3" EACH SIDE AT LH JOISTS.
6. 1"øx16" (Fy = 50 ksi) LONG WELDABLE STEEL BAR EACH SIDE OF JOIST.
7. AXIAL LOAD = 6.3k AT BLDG 2, 7.1k AT BLDG 3 (SERVICE)

310 STEEL JOIST AT STEEL JOIST GIRDER

NO SCALE

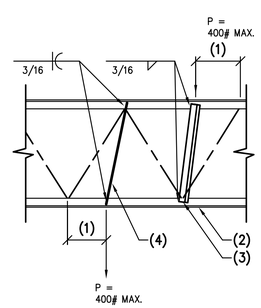

NOTES:
1. ADDITIONAL MEMBER WHEN LOAD IS MORE THAN 4" FROM PANEL POINT.
2. STEEL JOIST.
3. STEEL ANGLE 2 1/2"x 2 1/2"x1/4" FROM TOP CHORD TO NEAREST BOTTOM CHORD PANEL POINT.
4. 1/2"ø ROD FROM BOTTOM CHORD TO NEAREST TOP CHORD PANEL POINT – FOR CONCENTRATED LOAD AT BOTTOM CHORD.

NOTE:
PROVIDE THIS DETAIL WHEN CONCENTRATED LOAD EXCEEDS 100 LBS. – NOTIFY ENGINEER WHEN LOAD EXCEEDS 400 LBS.

307 ADDITIONAL WEB MEMBERS FOR CONCENTRATED LOAD OCCURING AWAY FROM JOIST PANEL POINT – TYPICAL

NO SCALE

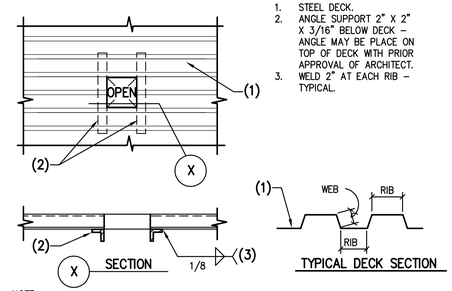

NOTES:
1. STEEL DECK.
2. ANGLE SUPPORT 2" X 2" X 3/16" BELOW DECK – ANGLE MAY BE PLACE ON TOP OF DECK WITH PRIOR APPROVAL OF ARCHITECT.
3. WELD 2" AT EACH RIB – TYPICAL.

NOTE:
AN OPENING WHICH CUTS ONE WEB (4" MAX DIMENSION PERPENDICULAR TO RIBS), MAY BE CUT IN DECK WITHOUT ANY SPECIAL REINFORCING.

AN OPENING WHICH CUTS TWO WEBS (8" MAX DIMENSION PERPENDICULAR TO RIBS), WILL REQUIRE ANGLE SUPPORT SHOWN ABOVE.

ANY OPENING WHICH CUTS MORE THAN TWO WEBS, FRAME OPENING WITH TYPICAL ANGLE SUPPORT FRAME, SEE TYPICAL OPENING IN STEEL DECK DETAIL.

306 TYPICAL SMALL OPENING IN STEEL DECK

NO SCALE

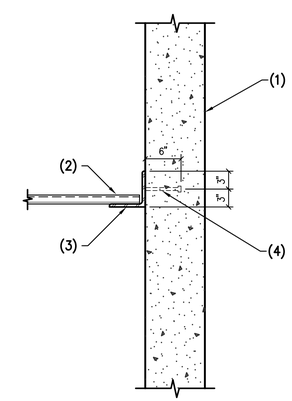

NOTES:
1. PRECAST CONCRETE WALL.
2. STEEL DECK.
3. STEEL ANGLE LEDGER PER PLAN.
4. 3/4"ø HEADED STUDS AT 12" O.C.

303 STEEL DECK AT PRECAST CONCRETE WALL

NO SCALE

Butler Design Group Inc.
architects & planners
5013 East Washington St. #100
Phoenix, Arizona 85034
Phone 602-957-1800

PROFESSIONAL STRUCTURAL ENGINEER
No. 14160325
ROBERT HALLIDAY
STATE OF UTAH

OWNERSHIP OF INSTRUMENTS OF SERVICE
REPORTS, DRAWINGS, SPECIFICATIONS, COMPUTER FILES, field data, notes and other documents and instruments prepared by the design professional as instruments of service shall remain the property of the design professional. The design professional shall retain all common law, statutory and other reserved rights, including the copyright thereto.

PROPERTY RESERVE

PK Associates, L.L.C.
6900 E. Belleview Ave. #200
Greenwood Village, CO 80111
Phone: (720) 799-1058
Email: cadd@pkastructural.com
Website: www.pkastructural.com
Proj: 24295A

700 SOUTH

752 SOUTH 6200 WEST
SALT LAKE CITY, UTAH

Current Submittal: 100% CD SUBMITTAL
01/09/26

Revisions:

Project No.:	24295A
Issue Date:	02/25/2026
Drawn By:	PKA
Project Manager:	RH

Title: FRAMING DETAILS

S701

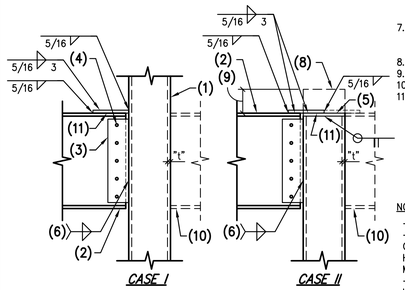

B SHEAR PLATE TO COLUMN AS OCCURS

NOTES:
1. HSS SQUARE OR RECTANGULAR COLUMN.
2. STEEL BEAM.
3. STEEL SHEAR PLATE. SEE TYP. BOLT SCHEDULE.
4. FOR SIZE, TYPE, AND NUMBER OF BOLTS, REFER TO TYP. BOLT SCHEDULE.
5. 1/2" STEEL CAP PLATE.
6. AT t ≤ 1/4" USE FILLET WELD SIZE TO MATCH "t". AT t > 1/4" USE 5/16" FILLET.
7. 1/2" STEEL BACKER PLATE x BEAM DEPTH x WIDTH OF COLUMN LESS 1".
8. TOP OF COLUMN AS OCCURS.
9. DEPTH TO MATCH JOIST SHOE.
10. BEAM BOTH SIDES WHERE OCCURS.
11. 3/8"x3" STEEL PLATE AT 318C.

NOTES:
-DETAIL A MAY BE USED TYP. U.N.O.
-DETAIL B MAY BE USED AT CONTRACTOR'S OPTION WHERE HSS MIN. FLANGE THICKNESSES ARE MET PER SCHEDULE.
-WHERE COLUMNS ARE RECTANGULAR IN LIEU OF SQUARE, THE GREATER FLANGE LENGTH (I.E. WORST CASE) APPLIES PER SCHEDULE.
-CONTRACTOR MAY INCREASE PLAN COLUMN THICKNESS AT THEIR OPTION.

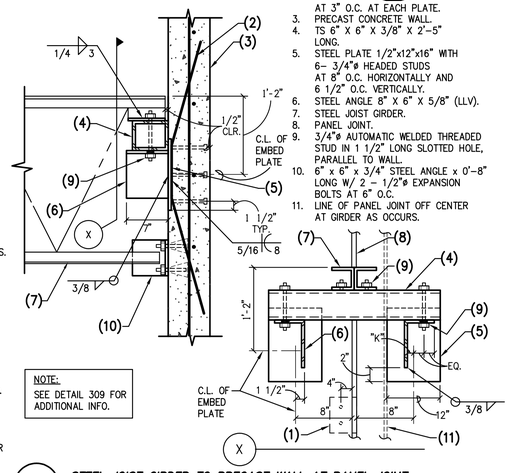

NOTE:
SEE DETAIL 309 FOR ADDITIONAL INFO.

316 STEEL JOIST GIRDER TO PRECAST WALL AT PANEL JOINT
NO SCALE

NOTES:
1. LINE OF STEEL ANGLE.
2. 3- #5 x 36" 8" 36" AT 3" O.C. AT EACH PLATE.
3. PRECAST CONCRETE WALL.
4. TS 6" X 6" X 3/8" X 2'-5" LONG.
5. STEEL PLATE 1/2"x12"x16" WITH 6- 3/4"ø HEADED STUDS AT 8" O.C. HORIZONTALLY AND 6 1/2" O.C. VERTICALLY.
6. STEEL ANGLE 8" X 6" X 5/8" (LLV).
7. STEEL JOIST GIRDER.
8. PANEL JOINT.
9. 3/4"ø AUTOMATIC WELDED THREADED STUD IN 1 1/2" LONG SLOTTED HOLE, PARALLEL TO WALL.
10. 6" x 6" x 3/4" STEEL ANGLE x 0'-8" LONG W/ 2 - 1/2"ø EXPANSION BOLTS AT 6" O.C.
11. LINE OF PANEL JOINT OFF CENTER AT GIRDER AS OCCURS.

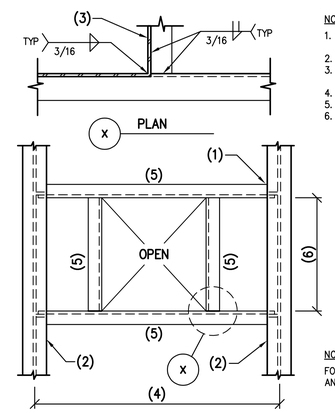

314 PLAN VIEW – TYPICAL FRAME OPENING AT LARGE OPENING OR MECHANICAL UNIT
NO SCALE

NOTES:
1. CONNECTION PER TYPICAL STEEL BEAM TO BEAM DETAIL.
2. STEEL BEAM OR JOIST SUPPORT.
3. 1/4" STEEL EDGE PLATE AROUND OPENING – TYPICAL.
4. 12'-6" MAXIMUM.
5. C8 X 11.5 STEEL BEAM.
6. 6'-0" MAXIMUM.

NOTE:
FOR CLARITY, STEEL DECK AND CONCRETE NOT SHOWN.

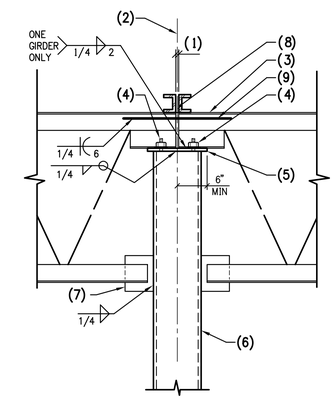

311 JOIST GIRDER AT STEEL COLUMN
NO SCALE

NOTES:
1. 1/2" CLEAR.
2. CENTERLINE OF STEEL COLUMN.
3. STEEL JOIST GIRDER.
4. 2- 3/4" 37/64 WELDED THREADED STUDS IN 1 1/2" LONG HORIZONTALLY SLOTTED HOLES - TIGHTEN NUTS FINGERTIGHT.
5. PLATE 1" THICK x GIRDER SEAT WIDTH PLUS 1".
6. STEEL COLUMN.
7. STABILIZER PLATE AS REQ'D BY GIRDER MFR.
8. STEEL JOIST BEARING ON JOIST GIRDER WHERE OCCURS.
9. 2- #7 WELDABLE REBARx18" LONG. ONE EACH SIDE.

NOTE:
EACH JOIST GIRDER SHALL BE WELDED AT ONE END ONLY AND BOLTED WITH SLOTTED HOLES AT THE OPPOSITE END.

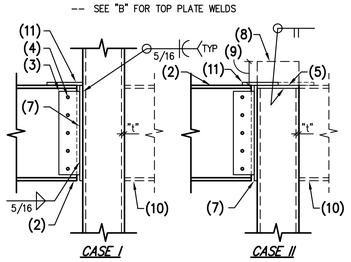

A SHEAR PLATE TO BACKER PLATE TO COLUMN AS OCCURS

MINIMUM COLUMN FLANGE THICKNESS FOR DETAIL B	
HSS MEMBER	THICKNESS ("t")
4x4	1/4"
5x5	1/4"
6x6	1/4"
7x7	1/4"
8x8	5/16"
9x9	5/16"
10x10	3/8"
12x12	3/8"
14x14	1/2"
16x16	1/2"

318 TYPICAL BEAM TO HSS STEEL COLUMN AS NOTED
318A 318B 318C
NO SCALE

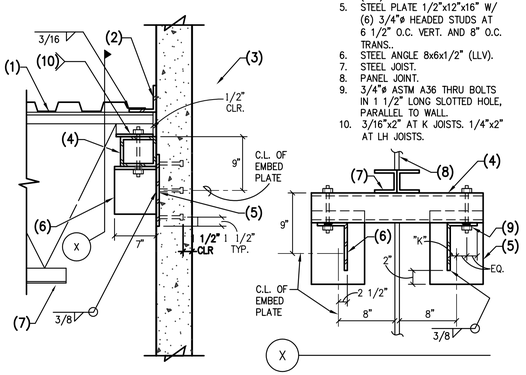

317 STEEL JOIST TO CONCRETE WALL AT PANEL JOINT
NO SCALE

NOTES:
1. STEEL DECK.
2. CONT. STEEL LEDGER.
3. CONCRETE WALL.
4. TS 6x5x 5/16"x2'-5" LONG (LLH).
5. STEEL PLATE 1/2"x12"x16" W/ (6) 3/4"ø HEADED STUDS AT 6 1/2" O.C. VERT. AND 8" O.C. TRANS..
6. STEEL ANGLE 8x6x1/2" (LLV).
7. STEEL JOIST.
8. PANEL JOINT.
9. 3/4"ø ASTM A36 THRU BOLTS IN 1 1/2" LONG SLOTTED HOLE, PARALLEL TO WALL.
10. 3/16"x2" AT K JOISTS. 1/4"x2" AT LH JOISTS.

NOTES:
1. 3/4"øx6" (NOM.) HEADED STUDS (TYPICAL U.N.O.).
2. SHEAR PLATE AND BOLTS PER TYP. BOLT SCHEDULE. PLATE ON INSIDE FACE OF BEAM.
3. 2 #6 x 4'-0" 6" 4'-0" 6" WELDABLE BARS.
4. #4x2'-6" AT EACH PLATE.
5. LINE OF TOP OF WALL – AS OCCURS.
6. EMBED PLATE PER SCHEDULE.
7. STEEL BEAM.
8. CONCRETE WALL PER PLAN.

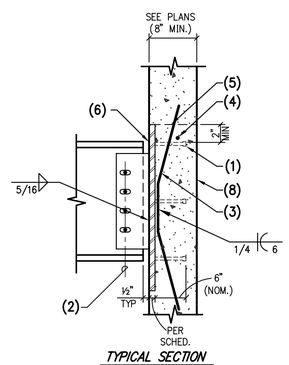

TYPICAL SECTION

BEAM SIZE	PLATE
W8x	P1
W10x	P1
W12x	P1
W14x	P2
W16x	P2
W18x	P2
W24x	P3

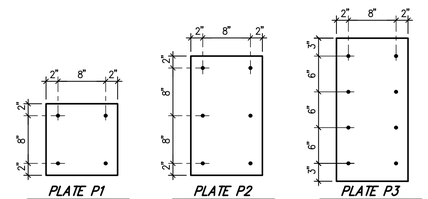

PLATE P1
1/2" x12"x1'-0" WITH 4-HEADED STUDS.

PLATE P2
1/2" x12"x1'-8" WITH 6-HEADED STUDS.

PLATE P3
3/4" x12"x24" WITH 8-HEADED STUDS.

315 TYPICAL EMBED PLATE DETAIL AT CONCRETE WALL
NO SCALE

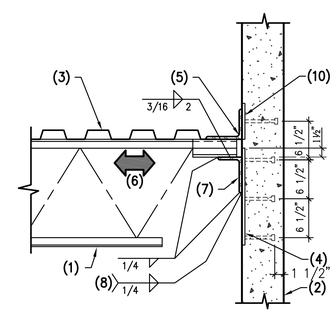

SEE DETAIL 317 WHEN JOIST OCCURS AT PANEL JOINT.

NOTES:
1. STEEL JOIST.
2. CONCRETE WALL.
3. STEEL DECK. ATTACH PER GSN.
4. 3/4"x16"x12" (LSV) STEEL EMBED PLATE W/ 6- 3/4"x6 1/2" EMBEDMENT H.S. AT 9" O.C. EACH WAY.
5. CONT. STEEL LEDGER.
6. AXIAL LOAD = 6.4K TRANSFERRED THRU JOIST SHOE.
7. STEEL ANGLE 6x6x3/4"x10" LONG (LLV).
8. WELD EACH SIDE WITH 2" RETURNS TOP AND BOTTOM.
9. 2" RETURNS – TYPICAL.
10. STEEL EMBED PLATE PER DETAIL 304.

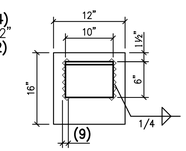

EMBED DETAIL

312 STEEL JOIST AT TILT UP CONCRETE WALL
NO SCALE

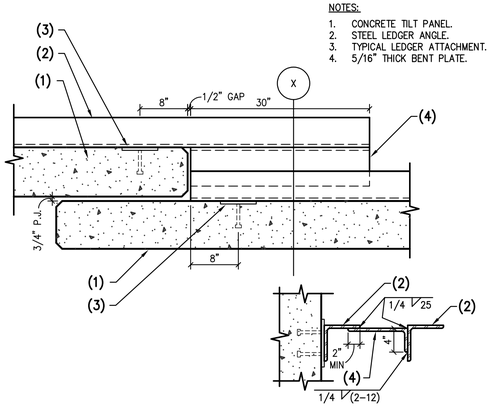

NOTES:
1. CONCRETE TILT PANEL.
2. STEEL LEDGER ANGLE.
3. TYPICAL LEDGER ATTACHMENT.
4. 5/16" THICK BENT PLATE.

SECTION

319 DOUBLE WALL LEDGER SPLICE
NO SCALE

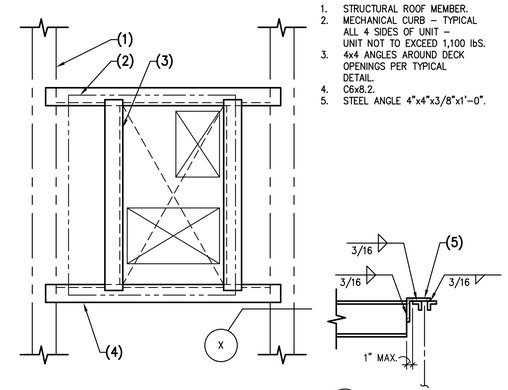

NOTES:
1. STRUCTURAL ROOF MEMBER.
2. MECHANICAL CURB – TYPICAL ALL 4 SIDES OF UNIT – UNIT NOT TO EXCEED 1,100 lbS.
3. 4x4 ANGLES AROUND DECK OPENINGS PER TYPICAL DETAIL.
4. C6x8.2.
5. STEEL ANGLE 4"x4"x3/8"x1'-0".

313 TYPICAL FRAMING AT MECHANICAL UNIT >750 LBS.
NO SCALE

Butler Design Group Inc.
architects & planners
5013 East Washington St. #100
Phoenix, Arizona 85034
Phone 602-957-1800

PROFESSIONAL STRUCTURAL ENGINEER No. 14160325 ROBERT HALLIDAY STATE OF UTAH

PROPERTY RESERVE

PK Associates, L.L.C.
6900 E. Belleview Ave. #200
Greenwood Village, CO 80111
Phone: (720) 799-1058
Email: cadd@pkastructural.com
Website: www.pkastructural.com
Proj: 24295A

OWNERSHIP OF INSTRUMENTS OF SERVICE
REPORTS, DRAWINGS, SPECIFICATIONS, COMPUTER FILES, FIELD data, notes and other documents and instruments prepared by the design professional as instruments of service shall remain the property of the design professional. The design professional shall retain all common law, statutory and other reserved rights, including the copyright thereto.

700 SOUTH
752 SOUTH 6200 WEST
SALT LAKE CITY, UTAH

Current Submittal: 100% CD SUBMITTAL
01/09/26

Revisions:

Project No.:	24295A
Issue Date:	02/25/2026
Drawn By:	PKA
Project Manager:	RH
Title:	FRAMING DETAILS

S702

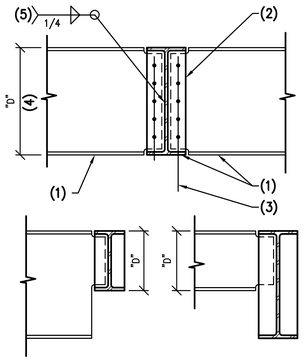

NOTES:
1. STEEL BEAM.
2. 3/8" STEEL SHEAR PLATE –USE 5/8" STEEL SHEAR PLATE WHERE "D" = 27" OR GREATER.
3. FOR SIZE, TYPE & NUMBER OF BOLTS, SEE TYPICAL BOLT SCHEDULE.
4. "D" = LESSER OF BEAM DEPTHS AS OCCURS.
5. WELD 3 SIDES TYPICAL – USE SAME CONNECTION AT STIFFENER PLATES WHEN REQUIRED.

NOTE:
AT ONE SIDED CONNECTIONS, INSTALL 3/8" STIFFENER PLATE OPPOSITE SHEAR PLATE.

329 TYPICAL CONNECTION WIDE FLANGE BEAM TO BEAM
NO SCALE

NOTES:
1. STEEL DECK.
2 STEEL PLATE 1/4"x4"x4".
3. STEEL JOIST.
4. STEEL ANGLE BRACE 3 1/2"x3 1/2"x1/4" AT 8'–0" O.C.
5. STEEL BEAM.
6. CONTINUOUS 12 GA. PLATE

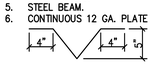

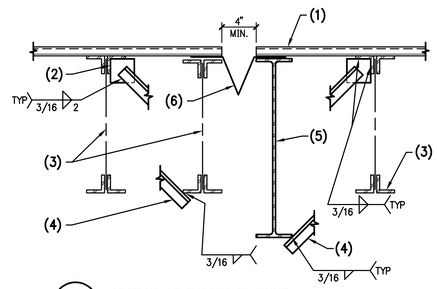

326 SECTION AT EXPANSION JOINT
NO SCALE

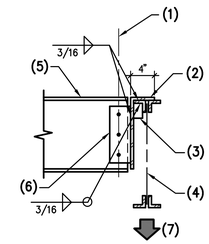

NOTES:
1. BOLT SIZE AND NUMBER PER BOLT SCHEDULE.
2. 1/4" BENT STEEL PLATE.
3. 1/4" STEEL STIFFENER.
4. STEEL JOIST.
5. STEEL BEAM.
6. SHEAR PLATE PER BOLT SCHEDULE.
7. DESIGN JOIST FOR ADDITIONAL 250# LOAD (ASD).

323 STEEL BEAM AT STEEL JOIST
NO SCALE

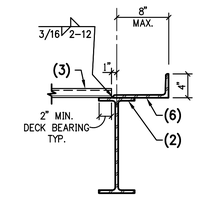

NOTES:
1. CONT. 1/4" STEEL BENT PLATE.
2. TOP FLANGE OF STEEL BEAM
3. STEEL DECK – FOR DIRECTION OF DECK, SEE PLANS.

320 TYPICAL DECK EDGE AT ROOF
NO SCALE

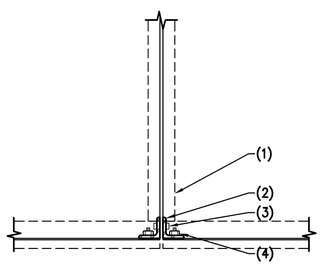

NOTES:
1. STEEL BEAM.
2. L4x4x1/2x6" LONG.
3. BOLT SIZE, TYPE, AND QUANTITY PER TYPICAL DETAIL.
4. 2– 1"ø AUTOMATICALLY WELDED THREADED HEADED STUD.

330 PLAN – STEEL BEAM AT STEEL BEAM
NO SCALE

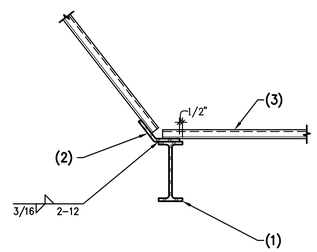

NOTES:
1. STEEL BEAM.
2. 1/4"x4"x4" CONT. BENT PLATE.
3. STEEL DECK.

327 STEEL DECK AT STEEL BEAM
NO SCALE

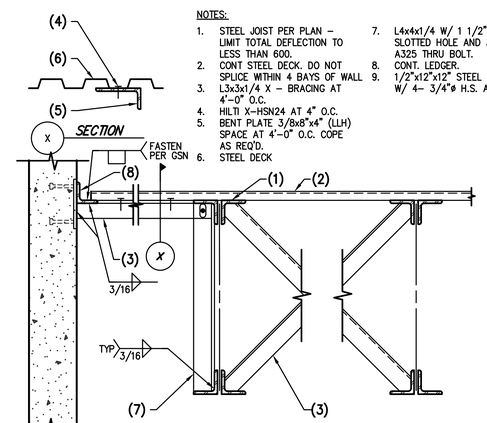

NOTES:
1. STEEL JOIST PER PLAN – LIMIT TOTAL DEFLECTION TO LESS THAN 600.
2. CONT STEEL DECK. DO NOT SPLICE WITHIN 4 BAYS OF WALL
3. L3x3x1/4 X – BRACING AT 4'–0" O.C.
4. HILTI X–HSN24 AT 4" O.C.
5. BENT PLATE 3/8x8"x4" (LLH) SPACE AT 4'–0" O.C. COPE AS REQ'D.
6. STEEL DECK
7. L4x4x1/4 W/ 1 1/2" VERT. SLOTTED HOLE AND 3/4"ø A325 THRU BOLT.
8. CONT. LEDGER.
9. 1/2"x12"x12" STEEL PLATE W/ 4– 3/4"ø H.S. AT 9" O.C.

324 STEEL DECK AT NON–BEARING PRECAST CONCRETE WALL
NO SCALE

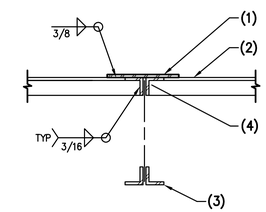

NOTES:
1. STEEL PLATE 1"x4"x16" CENTERED OVER JOIST.
2. 6"x4"x3/8" (LSH) STEEL ANGLE. WHERE SHOWN ON PLAN.
3. STEEL JOIST.
4. COPE STEEL ANGLE AS REQ'D.

NOTE:
STEEL DECK NOT SHOWN FOR CLARITY.

321 CHORD TIE AT STEEL JOIST
NO SCALE

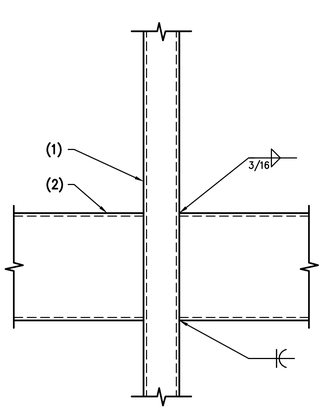

NOTES:
1. STEEL COLUMN.
2. STEEL BEAM.

331 STEEL BEAM AT STEEL COLUMN
NO SCALE

FRAMING NOTES:
1. THE TYPICAL STEEL BEAM TO STEEL COLUMN OR STEEL BEAM TO STEEL BEAM CONNECTION CONSISTS OF 3/8" SINGLE SHEAR PLATES WITH 1"ø. ASTM F3125 BOLTS. USE 5/8" SHEAR PLATES WHERE "D" = 27" OR GREATER.
2. ALL BOLTS SHALL BE INSTALLED USING SHORT SLOTTED HOLES IN EITHER THE BEAM WEB OR THE SHEAR PLATE PER LATEST AISC SPECIFICATIONS.

NOMINAL BEAM DEPTH "D"	NUMBER OF 1" DIA. ASTM, F3125 BOLTS
UP TO 7"	2
8" – 11"	2
12" – 14"	3
15" – 17"	4
18" – 20"	5
21" – 23"	6
24" – 29"	7
30" – 32"	8
33" – 35"	9
36"	10

328 BOLT SCHEDULE FOR TYPICAL STEEL CONNECTIONS
NO SCALE

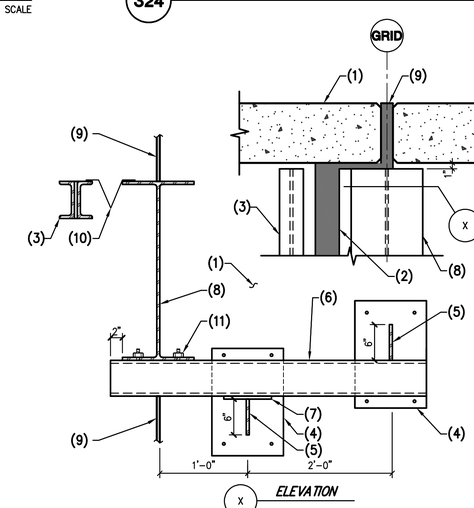

NOTES:
1. CONCRETE TILT PANEL WALL.
2. 4" EXPANSION JOINT.
3. STEEL JOIST.
4. STEEL EMBED PLATE 1/2"x12"x18" WITH 4– 3/4"ø HEADED STUDS. 15" VERTICAL AND 9" HORIZONTAL.
5. 3/8" STEEL STIFFENER PLATE.
6. HSS6"x6"x3/8"
7. 3/8"x8"x8".
8. STEEL BEAM.
9. 2" EXPANSION JOINT AT WALL PER ELEVATIONS.
10. CONTINUOUS BENT PLATE PER DETAIL 326.
11. 2– 3/4"ø AUTOMATIC WELDED THREADED STUDS IN 1 1/2" LONG HORIZONTAL SLOTTED HOLE.

325 PLAN VIEW AT EXPANSION JOINT
NO SCALE

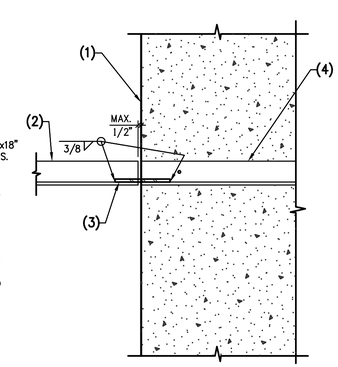

NOTES:
1. CONCRETE WALL.
2. STEEL ANGLE PER PLAN.
3. 1"x3 1/2"x12" (Fy = 50ksi) STEEL PLATE.
4. CONT. STEEL LEDGER ANGLE PER PLAN.

NOTE:
DECK NOT SHOWN FOR CLARITY.

322 STEEL ANGLE AT STEEL ANGLE CONNECTION (DRAG TIE)
NO SCALE

Butler Design Group Inc.
architects & planners
5013 East Washington St. #100
Phoenix, Arizona 85034
Phone 602-957-1800

PROFESSIONAL STRUCTURAL ENGINEER
No. 14160325
ROBERT HALLIDAY
STATE OF UTAH
REVISED

OWNERSHIP OF INSTRUMENTS OF SERVICE
REPORTS, DRAWINGS, SPECIFICATIONS, COMPUTER FILES, FIELD data, notes and other documents and instruments prepared by the design professional as instruments of service shall remain the property of the design professional. The design professional shall retain all common law, statutory and other reserved rights, including the copyright thereto.

PROPERTY RESERVE

PK Associates, L.L.C.
6900 E. Belleview Ave. #200
Greenwood Village, CO 80111
Phone: (720) 799-1058
Email: cadd@pkastructural.com
Website: www.pkastructural.com
Proj: 24295A

700 SOUTH
752 SOUTH 6200 WEST
SALT LAKE CITY, UTAH

Current Submittal: 100% CD SUBMITTAL
01/09/26

Revisions:

Project No.:	24295A
Issue Date:	02/25/2026
Drawn By:	PKA
Project Manager:	RH
Title:	FRAMING DETAILS

S703

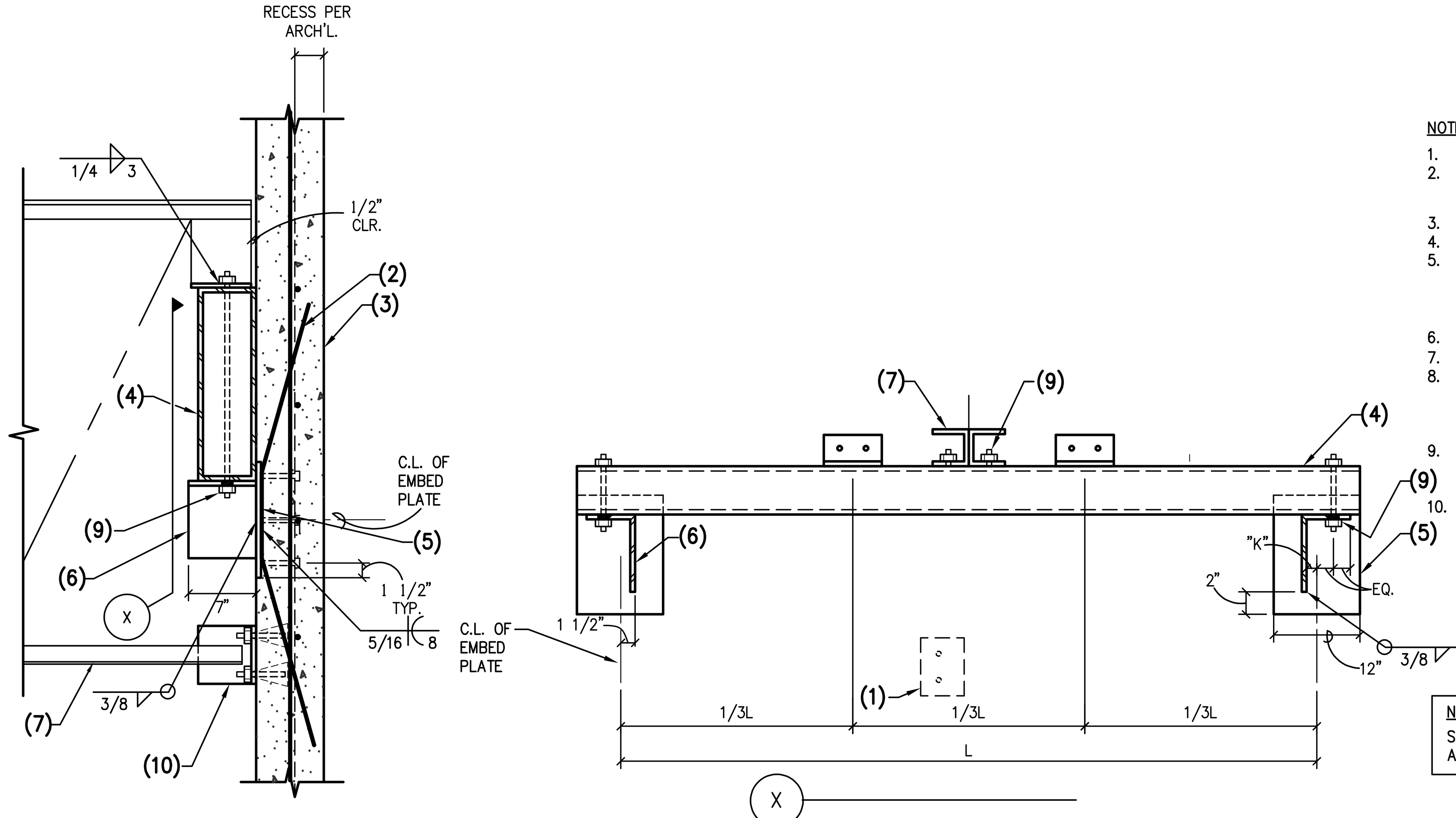

NOTES:

1. LINE OF STEEL ANGLE.
2. 2 #5 x 24" 8" 24" AT 6" O.C. AT EACH PLATE.
3. PRECAST CONCRETE WALL.
4. STEEL BEAM.
5. STEEL PLATE 1/2"x12"x16" WITH 6- 3/4"ø HEADED STUDS AT 8" O.C. HORIZONTALLY AND 6 1/2" O.C. VERTICALLY.
6. STEEL ANGLE 8" X 6" X 5/8" (LLV).
7. STEEL JOIST GIRDER.
8. L4x4x3/8x12" LONG W/ 2- 3/4"ø HILTI KWIK HUS EZ SCREW ANCHORS AT 8" O.C. W/ 4" EMBEDMENT CENTERED IN 2" VERTICALLY SLOTTED HOLES.
9. 3/4"ø AUTOMATIC WELDED THREADED STUD IN 1 1/2" LONG SLOTTED HOLE, PARALLEL TO WALL.
10. 6" x 6" x 3/4" STEEL ANGLE x 0'-8" LONG W/ 2 - 1/2"ø EXPANSION BOLTS AT 6" O.C.

NOTE: SEE DETAIL 309 FOR ADDITIONAL INFO.

335 STEEL JOIST GIRDER AT STEEL TRANSFER BEAM AT CONC. TILT PANEL

NO SCALE

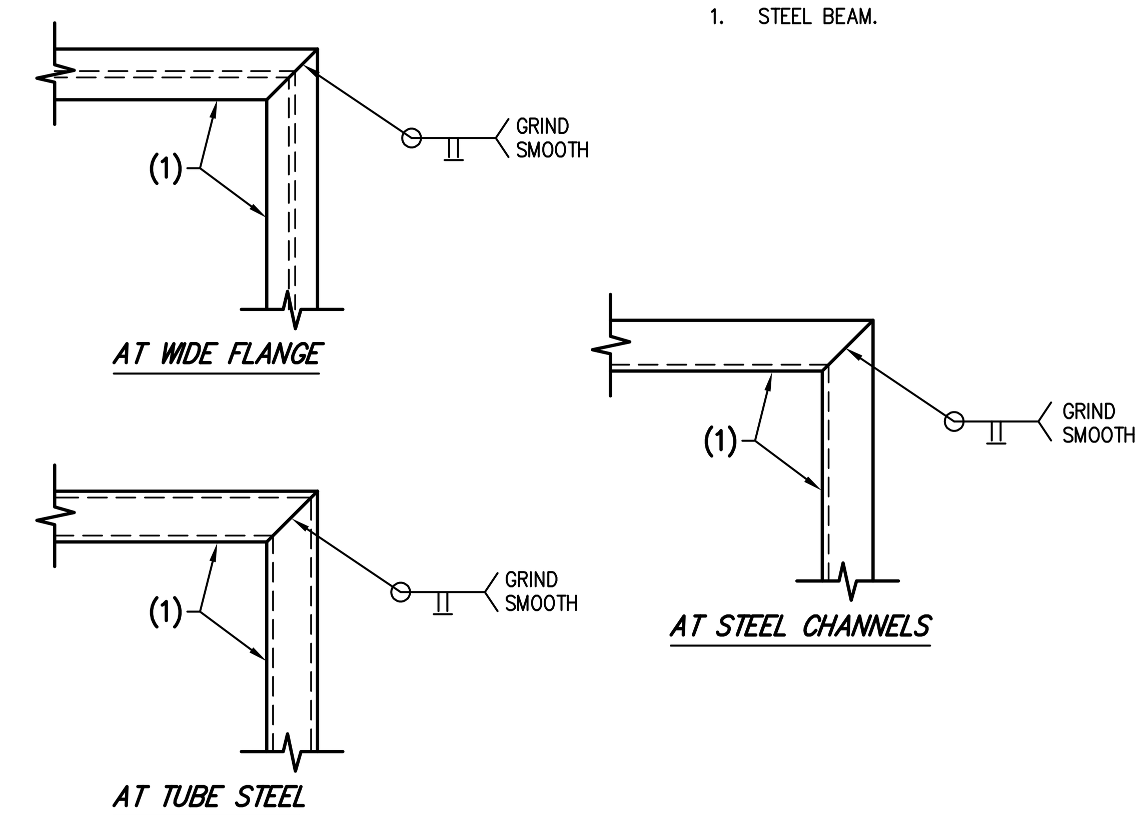

NOTES:

1. STEEL BEAM.

332 PLAN - STEEL BEAM AT STEEL BEAM

NO SCALE

NOTES:

1. STEEL BEAM.
2. CONCRETE TILT PANEL.
3. HSS 4x4x1/4.
4. STEEL DECK.
5. L6x4x4x1/4 BETWEEN BEAMS.
6. L4x4x4x1/4 BETWEEN BEAMS.
7. 1/2"x15"x15" STEEL PLATE WITH 4- 3/4ø H.S. AT 12"O.C.
8. 3- #7 A706 WELDABLE REBAR AT 3" O.C. WITH DAYTON SUPERIOR END ANCHOR THAT DEVELOPS 125% CAPACITY OF BAR.

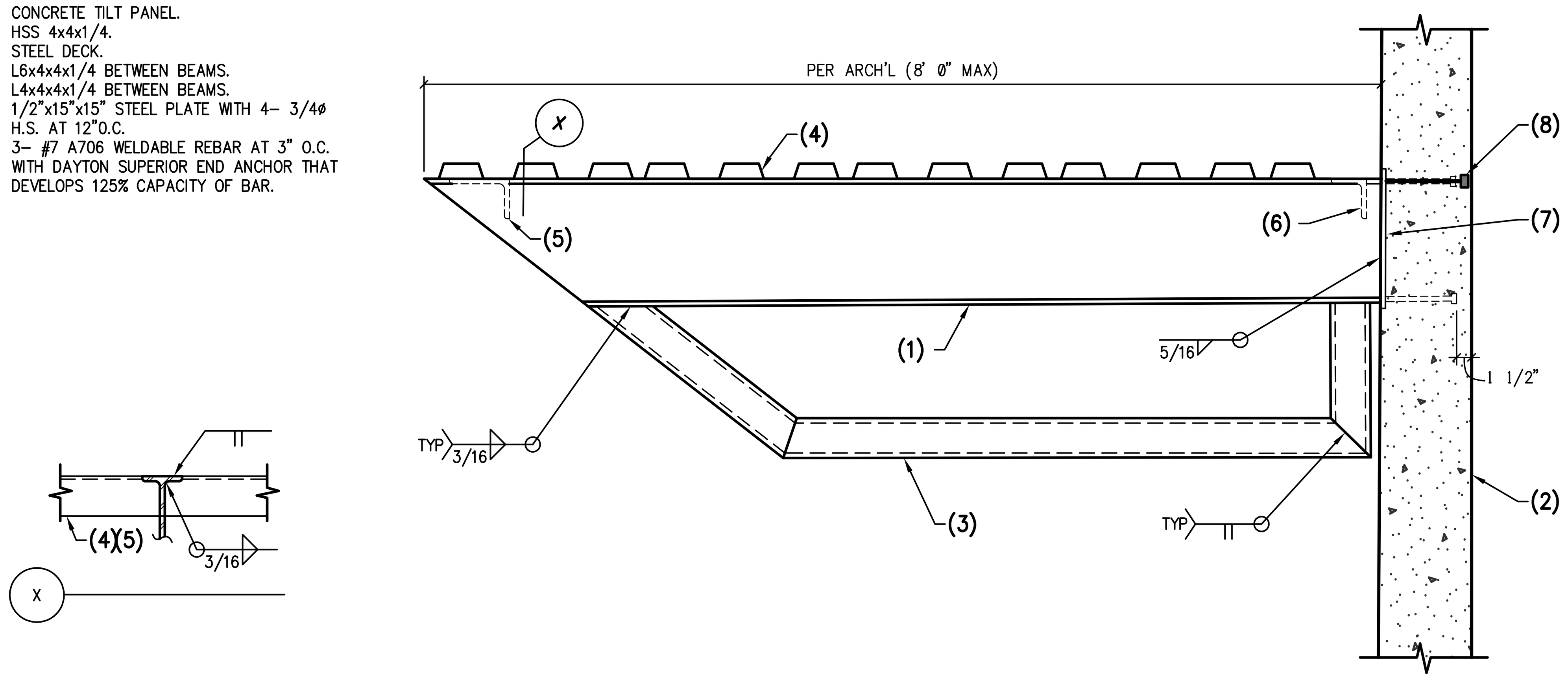

336 STEEL CANOPY BEAM AT CONCRETE TILT PANEL

NO SCALE

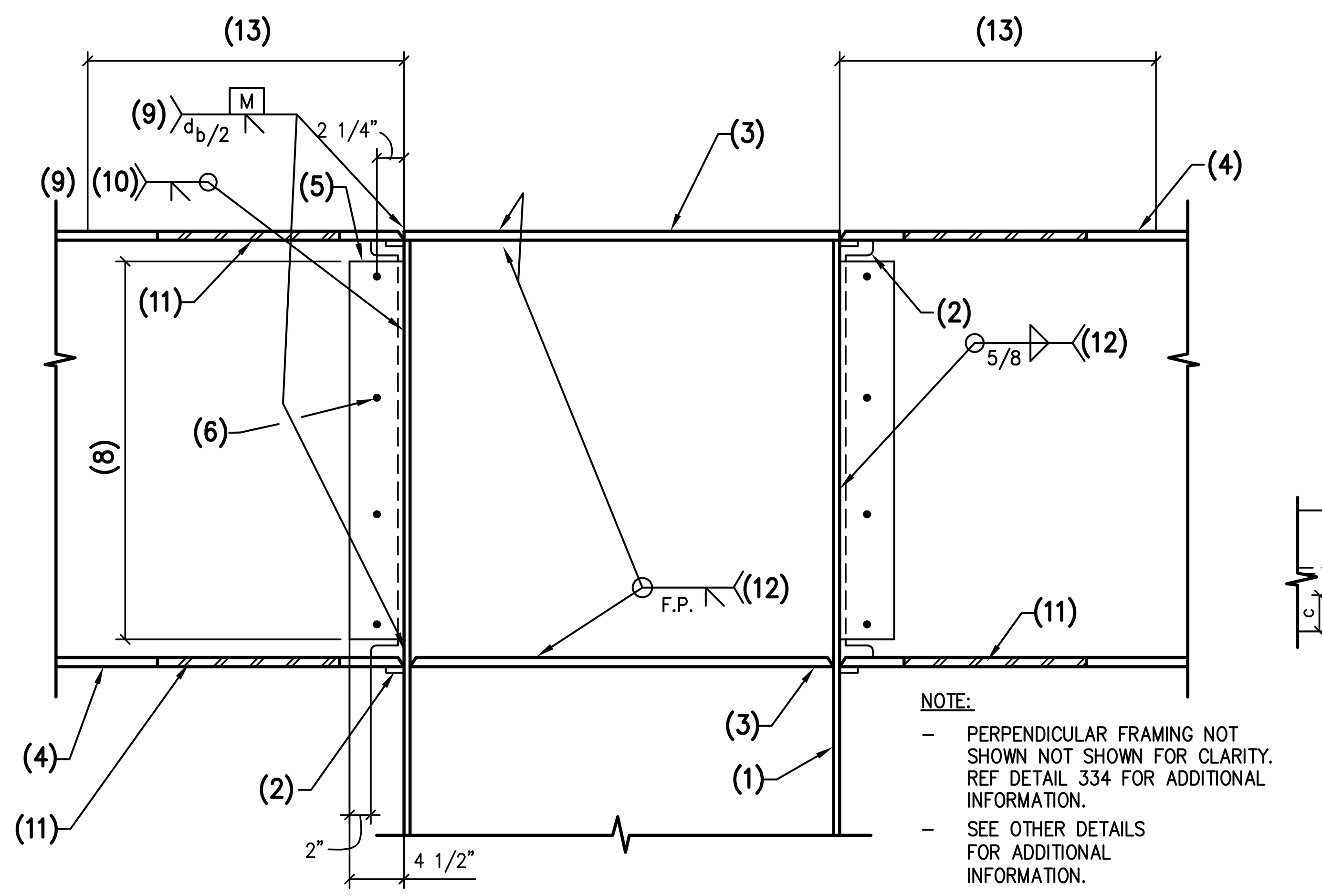

NOTES:

1. STEEL COLUMN.
2. STEEL BACKER PLATE.
3. STEEL CONTINUITY PLATE 1/4" GREATER THAN BEAM FLANGE THICKNESS (GRADE 50).
4. STEEL BEAM.
5. 3/8" SHEAR TAB FOR ERECTION AND BACKING.
6. BOLTS PER SCHEDULE.
7. CUT TOP AND BOTTOM FLANGE MAKE CIRCULAR CUTS W/ RADIUS = $\frac{4(.2b_f)^2+(.85d_b)^2}{8(.2b_f)}$
8. LENGTH OF SHEAR TAB TO BE EQUAL TO THE DISTANCE BETWEEN WELD ACCESS HOLES PLUS 1/4".
9. DEMAND CRITICAL WELD: ALL DEMAND CRITICAL WELDS (AND WELDS NOTED AS SUCH IN OTHER DETAILS) SHALL BE MADE WITH A FILLER METAL CAPABLE OF PROVIDING A MIN. CHARPY V-NOTCH TOUGHNESS OF 40ft-lb AT 70' FOR ENCLOSED CONDITIONS. WELDING MUST MEET AISC 341, APPENDIX W REQUIREMENTS.
10. F.P. BEAM WEB TO COLUMN.
11. REDUCED BEAM SECTION TOP AND BOTTOM. SEE SECTION "X".
12. TYPICAL AT CONTINUITY PLATE.
13. PROTECED ZONE = a+b+1/2 BEAM DEPTH. NO CONNECTIONS WITHIN THIS ZONE.

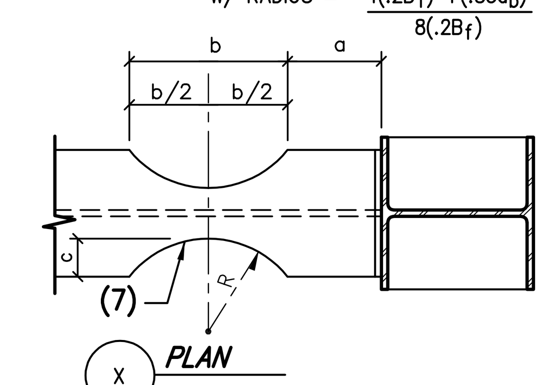

BEAM SIZE	a	b	c
W36 x 282	8.5"	24.25	3.375"

NOTE:

- PERPENDICULAR FRAMING NOT SHOWN NOT SHOWN FOR CLARITY. REF DETAIL 334 FOR ADDITIONAL INFORMATION.
- SEE OTHER DETAILS FOR ADDITIONAL INFORMATION.
- PROVIDE ANGLE BRACE PER DETAIL 326 16" FROM EDGE OF REDUCED BEAM SECTION
- ALL WELDS SHOWN ARE DEMAND CRITICAL.

333 SPECIAL MOMENT FRAME CONNECTION BEAM TO COLUMN DETAIL (RBS)

NO SCALE

NOTES:

1. STEEL BEAM.
2. CONCRETE TILT PANEL.
3. STEEL DECK.
4. HSS4x4x3/16.
5. L4x4x1/4 BETWEEN BEAMS.
6. 1/4" STEEL PLATES BETWEEN BEAMS.
7. 1/2"x15"x15" STEEL PLATE WITH 4- 3/4ø H.S. AT 12"O.C.
8. 4- #7 A706 WELDABLE REBAR AT 3" O.C. WITH DAYTON SUPERIOR END ANCHOR THAT DEVELOPS 125% CAPACITY OF BAR.
9. 1/2"x15"xPANEL WIDTH W/ 2- 3/4ø H.S. AT 4" O.C. AT BOTTOM OF PLATE. NO H.S. AT TOP OF PLATE.

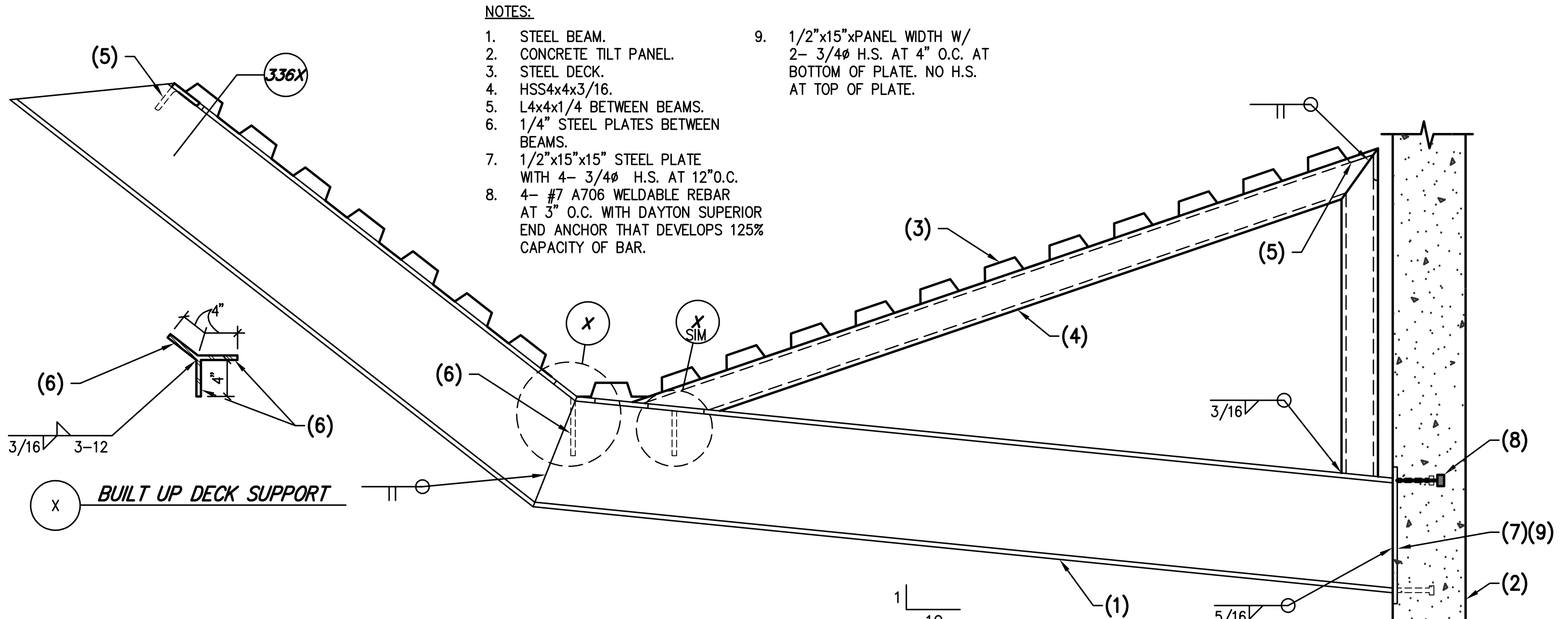

337 STEEL BEAM

337A AS NOTED

NO SCALE

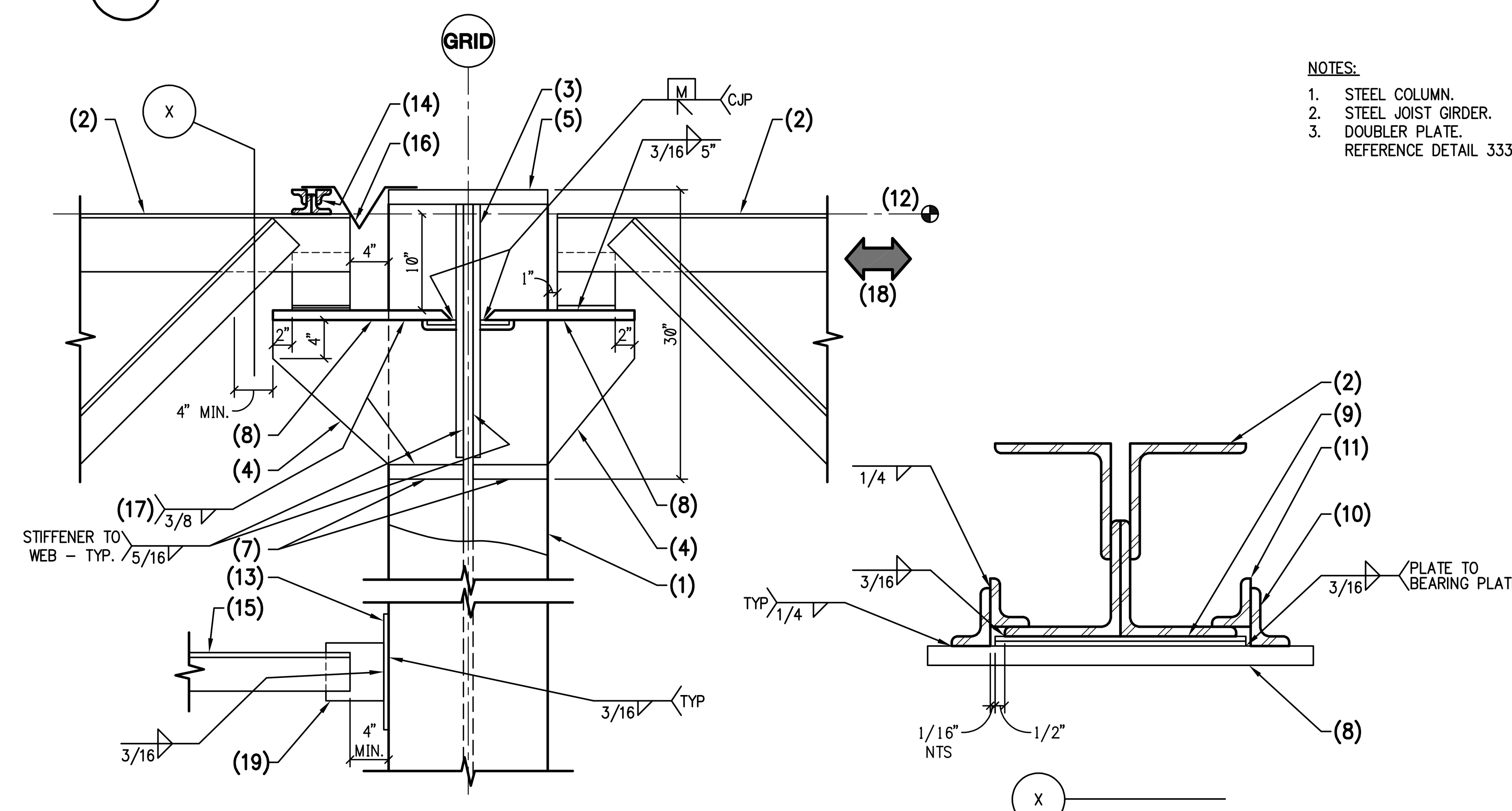

NOTES:

1. STEEL COLUMN.
2. STEEL JOIST GIRDER.
3. DOUBLER PLATE. REFERENCE DETAIL 333.
4. 2- 1" THICK STEEL STIFFENER PLATES.
5. COLUMN CAP PLATE. REFERENCE DETAIL 333.
6. REFERENCE DETAIL 333 FOR ATTACHMENT.
7. CONTINUITY PLATE PER DETAIL 333.
8. 1" THICK STEEL PLATE.
9. 2- 1/4" STEEL PLATESx WIDTH SHOWNxLENGTH OF GIRDER BEARING WITH TEFLON FINISH 1 SIDE EACH PLATE. TEFLON FLUSH TO TEFLON. DO NOT WELD PLATES TOGETHER.
10. 3"x2"x1/2" (LLV) STEEL ANGLE. LENGTH TO MATCH JOIST GIRDER SHOE.
11. 2"x2"x3/8" STEEL ANGLE. LENGTH TO MATCH JOIST GIRDER SHOE.
12. LINE OF TOP OF JOIST GIRDER.
13. 3/4"x12"xDEPTH OF COLUMN PLUS 1" EACH SIDE GIRDER STEEL PLATE.
14. STEEL JOIST.
15. BOTTOM CHORD OF TRUSS.
16. CONTINUOUS BENT PLATE PER DETAIL 326.
17. VERTICAL STIFFENER TO HORIZONTAL PLATE - TYP.
18. JOIST MANUFACTURER TO DESIGN GIRDER TO TRANSFER 10K AXIAL FORCE THROUGH SHOE.
19. 3/4" STABILIZER PLATE.

334 JOIST GIRDERS AT STEEL COLUMN AT EXPANSION JOINT (MOMENT FRAME)

NO SCALE

Butler Design Group Inc.
architects & planners
5013 East Washington St. #100
Phoenix, Arizona 85034
Phone 602-957-1800

PROFESSIONAL STRUCTURAL ENGINEER
No. 14160325
ROBERT HALLIDAY
STATE OF UTAH

OWNERSHIP OF INSTRUMENTS OF SERVICE

PROPERTY RESERVE

PK Associates, L.L.C.
6900 E. Belleview Ave. #200
Greenwood Village, CO 80111
Phone: (720) 799-1058
Email: cadd@pkastructural.com
Website: www.pkastructural.com
Proj: 24295A

700 SOUTH

752 SOUTH 6200 WEST
SALT LAKE CITY, UTAH

Current Submittal: 100% CD SUBMITTAL
01/09/26

Revisions:

Project No.:	24295A
Issue Date:	02/25/2026
Drawn By:	PKA
Project Manager:	RH
Title:	FRAMING DETAILS

S704

NOTES:
1. STEEL COLUMN.
2. STEEL BEAM.
3. 5/8" STEEL SHEAR TAB.
4. REF. TYPICAL DETAILS FOR BOLT SIZE, TYPE, AND AMOUNT.
5. 1"x7" WIDE 50 KSI STEEL PLATE.

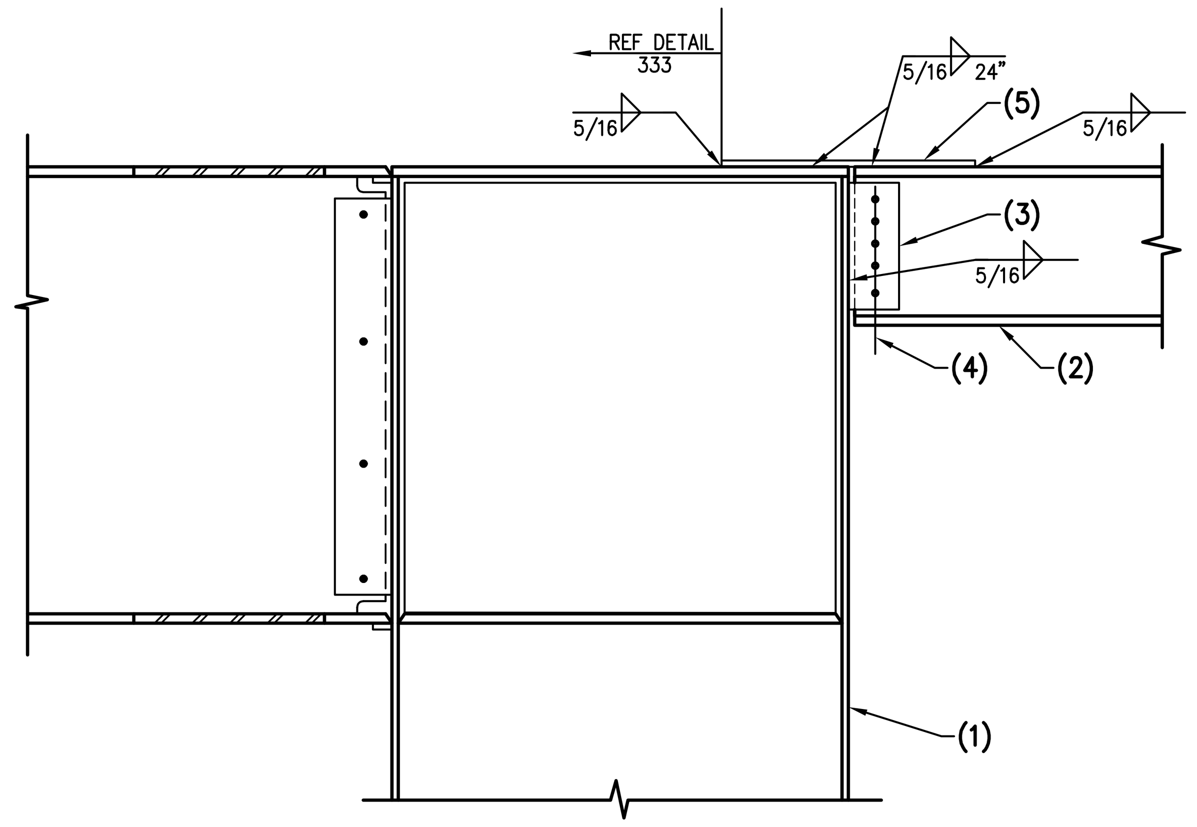

341 DRAG PLATE AT STEEL COLUMN AND BEAM

NO SCALE

NOTES:
1. STEEL BEAM.
2. CONCRETE TILT PANEL.
3. STUD FRAMIN AND FINISHES BY OTHERS.
4. STEEL DECK.
5. 1/2" STEEL SHEAR TAB.
6. BOLT SIZE, TYPE, AND QUANTITY PER TYPICAL DETAIL.
7. 1/2"x15"x15" STEEL PLATE WITH 4- 3/4ϕ H.S. AT 12"O.C.
8. 3- #7 A706 WELDABLE REBAR AT 3"O.C.

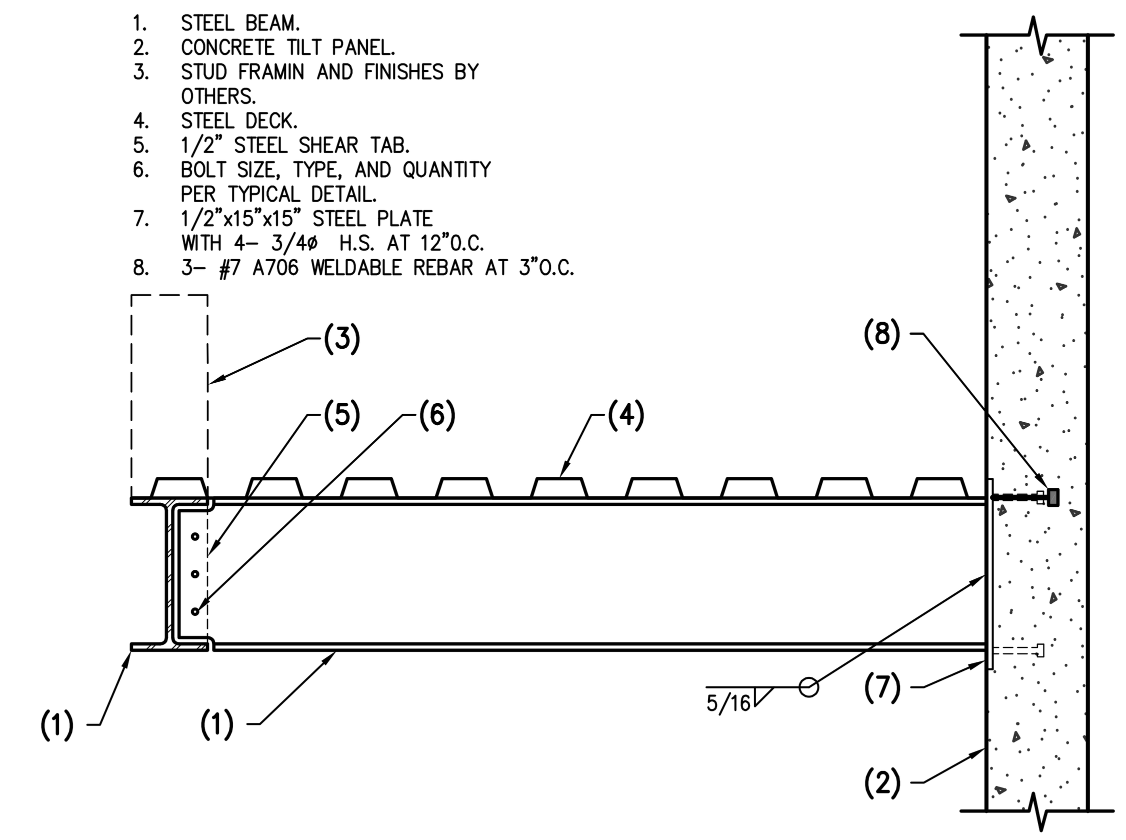

338 STEEL BEAM AT CONCRETE TILT PANEL

NO SCALE

NOTES:
1. STEEL BEAM.
2. STUD FRAMIN AND FINISHES BY OTHERS.

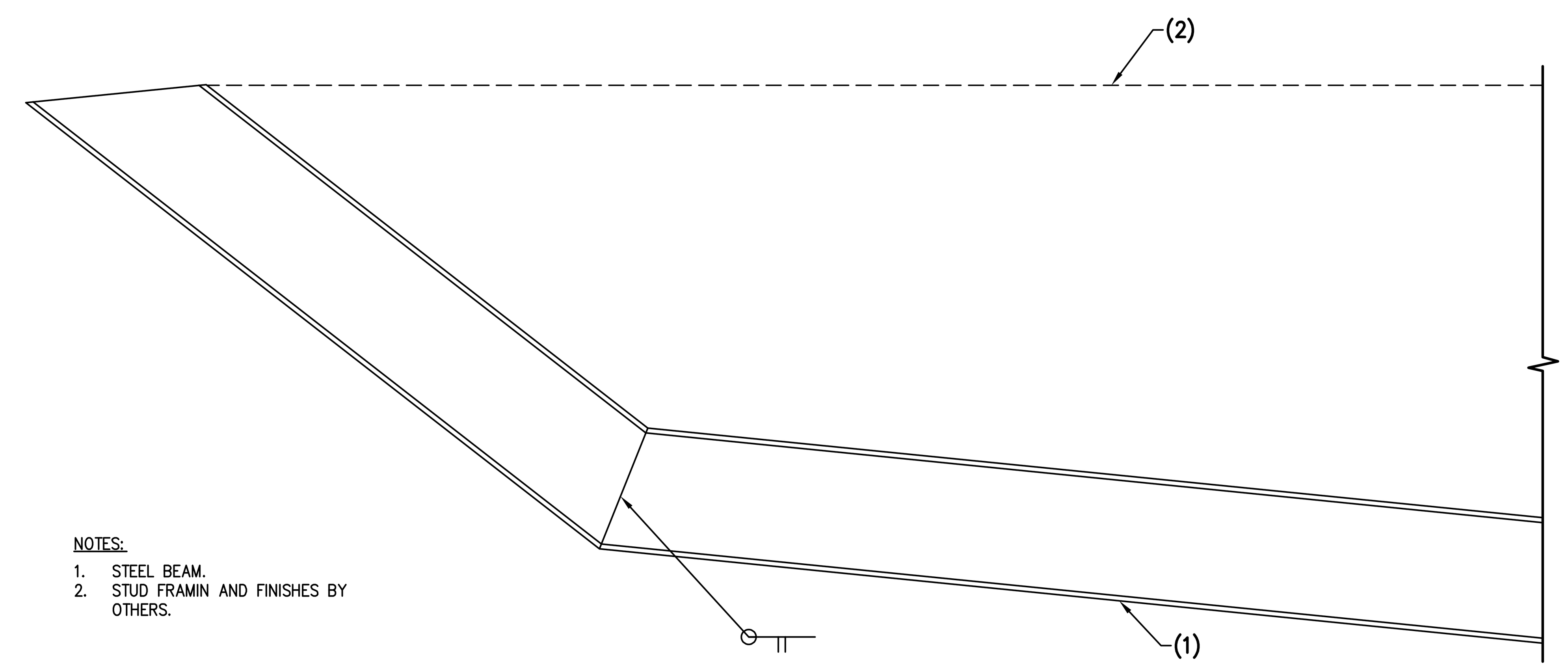

339 BENT STEEL BEAM

NO SCALE

NOTES:
1. STEEL BEAM.
2. 1/4"x4"x4" CONT. BENT PLATE.
3. STEEL DECK.

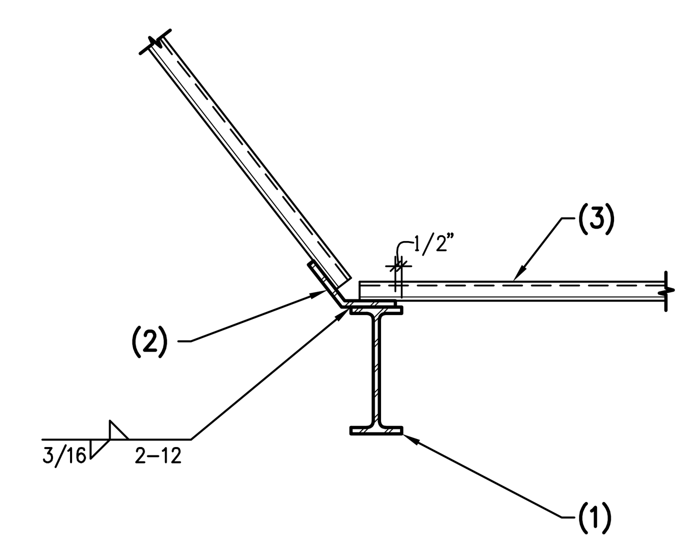

340 STEEL DECK AT STEEL BEAM

NO SCALE

Butler Design Group Inc.
architects & planners
5013 East Washington St. #100
Phoenix, Arizona 85034
Phone 602-957-1800

PROFESSIONAL STRUCTURAL ENGINEER
No. 14160325
ROBERT HALLIDAY
STATE OF UTAH
2/25/26

OWNERSHIP OF INSTRUMENTS OF SERVICE
All reports, plans, specifications, computer files, field data, notes and other documents and instruments prepared by the design professional as instruments of service shall remain the property of the design professional. The design professional shall retain all common law, statutory and other reserved rights, including the copyright thereto.

PROPERTY RESERVE

PK Associates, L.L.C.
6900 E. Belleview Ave. #200
Greenwood Village, CO 80111
Phone: (720) 799-1058
Email: cadd@pkastructural.com
Website: www.pkastructural.com
Proj: 24295A

700 SOUTH
752 SOUTH 6200 WEST
SALT LAKE CITY, UTAH

Current Submittal: 100% CD SUBMITTAL
01/09/26

Revisions:

Project No.:	24295A
Issue Date:	02/25/2026
Drawn By:	PKA
Project Manager:	RH
Title:	FRAMING DETAILS

S705